The Mysore Gazette.

Vol. 41.] PUBLISHED BY AUTHORITY. [No. 14.

BANGALORE, THURSDAY, APRIL 5, 1906.

☞ Separate paging is given to the Parts in order that they may be filed as distinct compilations

CONTENTS.

PART I.—Notifications by the Government of His Highness the Maharaja of Mysore.

PART II.—Notifications by the Government of India; The Hon'ble the Resident in Mysore; Chief Judge; Survey and Inam Superintendent; Comptroller; Chief Engineer; Mysore State Railway; Amrut Mahal Department; Inspector-General of Registration; Senior Surgeon; District and Sessions Judges; Sub-Judges; Deputy Commissioners of Districts; Forest Officers: Presidents, Bangalore and Mysore City Municipalities; Season Reports; Mortuary and Meteorological Statements; Postal Notices; Civil and Military Station Notifications, &c.

PART III.—Legislative Measures and Rules thereunder.

PART IV.—Official Papers.

PART I.

PROCLAMATION.

Whereas the office of the Dewan of Mysore has become vacant by the retirement of Sir Purnaiya Narasinga Rau Krishna Murti, K.C.I.E., We, placing trust and confidence in the loyalty, ability and judgment of Viswanath Pathankar Madhava Rau, C.I.E., and with the approval of the Government of India, do hereby appoint the said Viswanath Pathankar Madhava Rau, C.I.E., to be the Dewan of Mysore, and We do further appoint the said Viswanath Pathankar Madhava Rau, C.I.E., to be *Ex-officio* President of the Council.

Given under Our hand and seal at Mysore this 29th day of March 1906.

(Seal.) KRISHNARAJA WODAYAR.

Notifications by the Government of His Highness the Maharaja of Mysore.

GENERAL AND REVENUE.

No. 9720—*San. F.* 148 *of* 1905, *Sl.* 6, *dated* 20*th March* 1906.

Whereas the Government of His Highness the Maharaja of Mysore are satisfied that there is danger of an outbreak of plague in Tirumale in the Magadi Taluk, Bangalore District, if persons from plague-infected areas are permitted to assemble at that place on the occasion of Sri Ranganathaswami jatra.

The Government of His Highness the Maharaja of Mysore, in exercise of the powers vested in them by the Epidemic Diseases Regulation, II of 1897, prohibit the attendance of persons thereat from plague-infected areas from the 8th April 1906 to the 14th April 1906.

All persons proceeding to the said jatra in contravention of this notification will be turned back.

No. 9689—*San. F.* 33 *of* 1905, *Sl.* 12, *dated* 17—19*th March* 1906.

Whereas the Government of His Highness the Maharaja of Mysore are satisfied that there is danger of an outbreak of plague in the undermentioned places in the Chitaldrug District, if persons from plague-infected areas are permitted to assemble at those places on the occasion of the jatras, etc., noted against each :—

Name of jatra	Where held	Taluk	Date	
			From	To
1. Hanumantadevara jatra ...	Kunikere	Hiriyur ...	11th April 1906	14th April 1906
2. Ranganathadevara jatra ...	Nandihalli ...	Do	Do ..	16th April 1906
3. Kanava Maremma jatra ...	Marikanave	Do ...	8th May 1906	16th May 1906
4. Maremmana jatra ...	Yerahalli	Do	Do ...	Do
5. Siddeswaradevara jatra ...	Vaddikere	Do ...	19th May 1906	23rd May 1906
6. Ranganathadevara jatra ..	Abbinahole	Do ...	11th May 1906	14th May 1906
7. Kariyammana jatra ...	Magasandra	Do ...	12th May 1906	15th May 1906

The Government of His Highness the Maharaja of Mysore, in exercise of the powers vested in them by the Epidemic Diseases Regulation, II of 1897, prohibit the attendance of persons thereat from plague-infected areas on the dates shown against each.

All persons proceeding to the said jatras in contravention of this notification will be turned back.

No. 9718—*San. F.* 126 *of* 1905, *Sl.* 4, *dated* 20*th March* 1906.

Whereas the Government of His Highness the Maharaja of Mysore are satisfied that there is danger of an outbreak of plague in the undermentioned places in the Shimoga District, if persons from plague-infected areas are permitted to assemble at those places on the occasion of the jatras, etc., noted aginst each :—

Name	Where held	Taluk	Date	
			From	To
1. Hutcharayaswami car festival ...	Shikarpur ...	Shikarpur ...	8th April 1906	16th April 1906
2. Kudli Sangameswara jatra ...	Kudli ..	Shimoga ...	23rd March 1906	30th March 1906
3. Pillangere Venkataramanadevara rathotsava	Pillangere ...	Shimoga ...	13th May 1906	15th May 1906

The Government of His Highness the Maharaja of Mysore, in exercise of the powers vested in them by the Epidemic Diseases Regulation, II of 1897, prohibit the attendance of persons thereat from plague-infected areas on the dates shown against each.

All persons proceeding to the said jatras in contravention of this notification will be turned back.

No. 9902—*San.* (43-05)-14, *dated* 23*rd*—26*th March* 1906.

It is hereby notified for general information that the places mentioned hereunder in the district of Tumkur will be deemed to be infected areas, for the purposes of the Regulations issued with Notifications Nos. 9383—Mis. F. 21-96 and 9384—Mis. F. 21-96, dated the 10th February 1898, under the Epidemic Diseases Regulation :—

Place	*Taluk*
Govindanaikanpalya	Tumkur.

No. 9948—*San. F.* 126 *of* 1905, *Sl.* 6, *dated* 24—26*th March* 1906.

Whereas the Government of His Highness the Maharaja of Mysore are satisfied that there is danger of an outbreak of plague in Mahishi in the Tirthahalli Taluk, Shimoga District, if persons from plague-infected areas are permitted to assemble at that place on the occasion of Sri Aswathanarayanadevara Rathotsava :

The Government of His Highness the Maharaja of Mysore, in exercise of the powers vested in them by the Epidemic Diseases Regulation, II of 1897, prohibit the attendance of persons thereat from plague-infected areas from the 5th to the 12th April 1906.

All persons proceeding to the said Rathotsava in contravention of this notification will be turned back.

No. J. 2700—*Pol.* 100-7, *dated* 30*th*—31*st March* 1906.

In Government Notification No. J. 2335, dated the 28th February 1906, authorising the Deputy Commissioner of the Bangalore District to take order for the acquisition of a certain land and buildings in the Fort of the Bangalore City, for the construction of a new Police Station, etc., substitute the words "under Sections 7 and 3 (*c*)" for the words "under Section 7," and the words "the Assistant Commissioner-Magistrate of the Bangalore City" for the words "the Deputy Commissioner of the Bangalore District."

No. 10272—*L. B.* (196-05)-11, *dated* 2*nd*—4*th April* 1906.

Mr. Pudukote Subba Rao has been elected by the Taluk Board of Heggaddevankote as a member of the District Board of Mysore, in place of Mr. Dasegowda, deceased.

No. R. 11897—*L. R.* 279-05-5, *dated* 16*th March* 1906.

Under Section 6 of the Land Acquisition Regulation, No. VII of 1894, it is hereby declared that the land described hereunder is required for a public purpose, *viz.*, for the new village site of the Manighatta village in the Kolar Taluk; and under Sections 7 and 3 (*c*) of the said Regulation, the Deputy Commissioner of the Kolar District is authorized to take order for the acquisition of the said land:—

District—Kolar.
Taluk—Kolar.
Hobli—Kolar.
Village—Manighatta.
Name of khatedar—Muniga *bin* Byaga.
Survey No. 48—1.
Dry, wet or garden—Dry.
Total extent—4 acres and 36 guntas.
Assessment—Rs. 11-4-0.
Extent now required
Extent—4 acres and 36 guntas.
Assessment—11-4-0.
Boundaries—
East—Survey Nos. 47—2 and 50.
West—Survey No. 48—2.
North—Survey No. 47—1.
South—Survey No. 49.

No. R. 11961—*L. R.* 540-05-3, *dated* 19*th March* 1906.

Under Section 6 of the Land Acquisition Regulation, No. VII of 1894, it is hereby declared that the lands described hereunder are required for a public purpose, *viz.*, for opening a timber depot in the Muthinakoppa village; and under Sections 7 and 3 (*c*) of the said Regulation, the Assistant Commissioner in charge of the Tarikere group of taluks is authorized to take order for the acquisition of the said lands:—

District	Taluk	Hobli	Village	Name of khatedar	Survey No.	Dry, wet or garden	Total extent		Assessment			Extent now required		Assessment			Boundaries			
																	East	West	North	South
							A.	g.	Rs.	a.	p.	A.	g.	Rs.	a.	p.				
Kadur	Yedahalli Sub-Taluk	Yedahalli	Muthinakoppa	Buraju Krishnaiya	100	Dry ...	1	9	0	8	0	1	9	0	8	0	Yedahalli Mandagadde road	River Tunga and S. No. 53	S. No. 101	S. No. 53
				Kanigalu Koppa Dyavegowda	101	Do ..	0	26	0	4	0	0	26	0	4	0	Do ..	Tunga river	Tunga river	Do 100
				Do ...	102	Wet ...	5	9	15	0	0	1	32		..		S. No. 102 (part)	Yedahalli Mandagadde road	S. No. 102 (part)	Do 99
						Dry ...	1	32												

No. R. 12101—*L. R.* 541-05-2, *dated* 21*st March* 1906.

Under Section 6 of the Land Acquisition Regulation, No. VII of 1894, it is hereby declared that the undermentioned land is required for a public purpose, *viz.*, for a road from Kadur to

Malleswara; and under Sections 7 and 3 (*c*) of the said Regulation, the Assistant Commissioner in charge of the Tarikere group of taluks is authorized to take order for its acquisition :—

District—Kadur.
Taluk— Do
Hobli— Do
Village—Timmapur.
Name of holder—Banava bin Sankari.
Extent of land required—33 guntas.
Survey No. 3.

Total area—4 acres and 9 guntas.
Assessment—Rs. 17.
Boundaries—
East—Survey No. 2.
West—Rayakalave.
North—Survey No. 4.
South—Survey No. 1.

ERRATA.

No. 10010—*Exam.* (3-05)-25, *dated* 27—28*th March* 1906.

In the results of the Civil Part 2 and Revenue Examinations published at pages 57 and 58-60, respectively, Part I, *Mysore Gazette* of the 1st February 1906, under Government Notifications Nos. 7680—Exam. (3-05)-16 and 7684—Exam. (3-05)-17, dated 20th—24th January 1906 :—

Name	Designation or address.
For No. 378, Venkatasubbaiya, Basavapatna ...	Ponnathpur, Hassan Taluk.
Read No. 378, Venkatasubbaiya, Basavapatna S. ...	Ponnathpur, Hassan Taluk.
For No. 472, Srikantaiya, Nagamangalam ...	C/o M. Govindappa, Pensioned Amildar, Kotwal Ramappa's street, Mysore.
Read No. 472, Srikantaiya, Nagamangalam S. ...	C/o M. Govindappa, Pensioned Amildar, Kotwal Ramappa's street, Mysore.
For Reg. No. 294, A. B.	
Read Reg. No. 294, A.	

No. R. 12553—*L. R.* 437-05-5, *dated* 28*th March* 1906.

Under Section 6 of the Land Acquisition Regulation, No. VII of 1894, it is hereby declared that the land described hereunder is required for a public purpose, *viz.*, for a camping ground, and under Sections 7 and 3 (*c*) of the said Regulation, the Assistant Commissioner in charge of the Heggaddevankote group of taluks is authorised to take order for the acquisition of the said land :—

District	Taluk	Hobli	Village	Name of khatedar	Survey No.	Dry, wet or garden	Total extent		Assessment	Extent now required		Boundaries			
												East	West	North	South
							A.	g.	Rs. a. p.	A.	g.				
Mysore	Heggaddevankote	Hobli Antersante	Nisna	Syed Oomar *bin* Rahiman Sab ... Enjoyer Syed Ahamed Sab	53	Dry	49	12	17 0 0	31	17*	Nisna Survey Nos. 50, 51 & 52.	Karapur Survey Nos. 7 & 8	Mysore Manantoddy road	Kabbani river
				Do ...	50	Dry	14	1	8 0 0	2	20	Nisna Survey No. 50	Survey No. 53	Survey No. 53	Survey No. 53

Remarks—* Of this 10 acres and 12 guntas is phut kharab included in the camping ground.

No. R. 12592—*L. R.* 554-05-3, *dated* 29*th March* 1906.

Under Section 6 of the Land Acquisition Regulation, No. VII of 1894, it is hereby declared that the land described hereunder is required for a public purpose, *viz.*, building houses in Madapura village, Heggaddevankote Taluk; and under Sections 7 and 3 (*c*) of the said Regu-

ation, the Assistant Commissioner in charge of the Hunsur group of taluks is authorised to take order for the acquisition of the said land :—

District—Mysore.
Taluk—Heggaddevankote.
Hobli—Hampapura.
Village—Madapura.
Name of khatedar—Kappani Gauda.
Survey No.—110.
Total extent—5 acres and 7 guntas.
Assessment—Rs. 4.
Extent now required—2 acres and 27 guntas.

Boundaries—
East—Lane.
West—Survey Nos. 30, 31.
North—Survey No. 111.
South—Village and Survey No. 29.
Remarks—As there are no vacant building sites in the village this land is wanted to build houses by the villagers and has been marked out in accordance with the modern sanitary requirements.

No. R. 12594—*L. R.* 553-05-2, *dated* 29*th March* 1906.

Under Section 6 of the Land Acquisition Regulation, No. VII of 1894, it is hereby declared that the land described hereunder is required for a public purpose, *viz.*, building houses in Kyathanhalli village ; and under Sections 7 and 3 (*c*) of the said Regulation, the Assistant Commissioner in charge of the Hunsur group of taluks is authorised to take order for the acquisition of the said land :—

District—Mysore.
Taluk—Heggaddevankote.
Hobli—Hampapura.
Village—Kyathanhalli.
Name of khatedar—Kantha Dasi.
Survey No.—61—3.
Total extent—2 acres and 27 guntas.
Assessment—Rs. 2.
Extent now required—1 acre and 12 guntas.

Boundaries—
East—Survey No. 80.
West—Survey Nos. 58 and 60.
North—Village.
South—Survey No. 62.
Remarks—As there is no vacant site in the village this land is wanted for building houses by the villagers and the land is contiguous to the existing houses.

No. R. 12622—*L. R.* 561-05-5, *dated* 30*th March* 1906.

Under Section 6 of the Land Acquisition Regulation, No. VII of 1894, it is hereby declared that the land described hereunder is required for a public purpose, *viz.*, for constructing a Police Station with lines and a musafirkhana at Talkad, T.-Narsipur Taluk ; and under Sections 7 and 3 (*c*) of the said Regulation, the Assistant Commissioner in charge of the Nanjangud group of taluks is authorised to take order for the acquisition of the said land :—

District—Mysore.
Taluk—T.-Narsipur.
Hobli—Talkad.
Village—Vadayandahalli.
Name of khatedar—Siddabasavadevaru.
Survey No.—265.
Dry, wet or garden—Garden.
Total extent—4 acres and 14 guntas.
Assessment—Rs. 8-8-0.

Extent now required—
Dimensions in yards—East to west 44, north to south 66.
Total—24 guntas.

Boundaries—
East—Talkad-Mudukthore road.
West—Owner's remaining land Survey No. 265.
North—Survey No. 266 and Narsipur-Talkad road.
South—Owner's remaining land Survey No. 265.

No. R. 12738—*L. R.* 447-05-5, *dated* 31*st March*—2*nd April* 1906.

Under Section 6 of the Land Acquisition Regulation, No. VII of 1894, it is hereby declared that the lands described hereunder are required for a public purpose, *viz.*, for extending the Palace Zoo grounds at Mysore in the Mysore District; and under Sections 7 and 3 (*c*) of the said Regulation, the Deputy Commissioner of the Mysore District is authorised to take order for the acquisition of the said lands :—

District	Taluk	Hobli	Village	Name of khatedar	Survey No.	Dry, wet or garden	Total extent	Assessment	Extent now required		Boundaries			
									Extent	Assessment	East	West	North	South
							A. g.	Rs. a. p.	A. g.	Rs. a. p.				
Mysore	Mysore	Mysore	Mysore	Rachiah ...	500	Dry and garden	3 17 2 0 5 17	13 0 0	5 17	13 0 0	Govinda Row's and Rama Row's garden.	Road ...	Srinivasiengar's garden.	City boundary.
				Do ...	501	Garden	0 25	2 12 0	0 25	2 12 0	Syed Mohidin's land.	Do ...	S. No. 502	S. No. 500.

CIVIL APPOINTMENTS.

Heads of Departments and all other officers concerned are informed that Notifications in the Gazette are in future to be accepted as disposing of all references regarding leave, transfers, appointments, powers and other personal questions affecting Gazetted officers, as to which orders are gazetted by the Government in this Part of the Gazette, and that any subsidiary orders as to relief of their subordinates and the like, which such notifications necessitate, must be issued by them on receipt of the Gazette, as no other orders will be issued by Government.

No. G. 4607—*G. M.* 241-05-1, *dated 29th March* 1906.

Messrs. Raja Manthra Pravina C. Srinivasiengar and C. Madiah, Rao Bahadur, First and Second Councillors, having been permitted to relinquish charge of the office of Councillor with effect from the afternoon of the 29th instant, and to retire on the expiry of the privilege leave due to them, His Highness the Maharaja of Mysore is pleased to appoint Mr. T. Ananda Rau, B.A., to be the First Councillor and Mr. K. P. Puttanna Chetty to be the Second Councillor, for a period of two years from the 29th instant, or during His Highness' pleasure.

No. J. 2655—*Police* 42-6, *dated 30th March* 1906.

Mr. Mirza M. Ismail, B.A., Probationary Assistant Superintendent of Police, having availed himself, from the forenoon of the 10th February 1906, of the one month's leave without allowances granted to him in Notification No. J. 2232—Police 42-05-4, dated the 14th February 1906, and returned to duty on the forenoon of the 8th March 1906, the unexpired portion of the leave, *viz.*, two days, is hereby cancelled.

No. R. 12807—*L. R.* 363-05-4, *dated 4th April* 1906.

In modification of Notification No. R. 13313—L. R. 187-04-6, dated the 30th June 1905, Mr. N. Gopalakrishna Iyengar, now Amildar of the Seringapatam Taluk, is granted privilege leave of absence for one month, with effect from the date of availment.

2. S. Srinivasaiengar, Acting Deputy Amildar of French Rocks, will be in charge of the Seringapatam Taluk also.

No. R. 12805—*L. R.* 202-05-4, *dated 4th April* 1906.

Under Article 188 of the Mysore Service Regulations, Mr. S. Krishnappa, Amildar of Sorab, is granted privilege leave of absence for three weeks, from the 1st April 1906 or the date of availment.

2. The Taluk Sheristadar will act as Amildar and exercise 3rd class Magisterial powers during the Amildar's absence on leave.

No. G. 4653—*G. M.* 241-05-2, *dated 31st March* 1906.

Mr. T. Ananda Rao, B.A., entered upon his duties as Member of Council in the afternoon of Thursday the 29th March 1906.

No. R. 12734—*L. R.* 21-05-128, *dated 31st March—2nd April* 1906.

Mr. K. P. Puttanna Chetty, Deputy Commissioner, handed over and Mr. C. Rama Rao, Assistant Commissioner, received charge of the Kolar District and Treasury on the afternoon of the 27th March 1906.

No. R. 12699—*Ft.* 162-05-2, *dated 31st March* 1906.

The following promotions of Forest Officers are ordered :—

1. Mr. M. G. Rama Rao, Assistant Conservator of Forests, second grade, to the first grade, *vice* Mr. Appaiya, deceased.

2. Mr. H. Srinivasa Rao, Assistant Conservator, third grade, to the second grade, *vice* Mr. M. G. Rama Rao.

To have effect from the 15th December 1905.

3. Mr. H. Ramaiya, Sub-Assistant Conservator of Forests, to be Assistant Conservator of the third grade, with effect from the 1st of March 1906.

No. 12804—*Agri.* 38-05-5, *dated 4th April* 1906.

Mr. N. Narasimhaiengar, Veterinary Officer of the Imperial Service Regiment, is appointed as Inspector of Cattle Diseases in Mysore.

No. J. 2717—*Cts.* 247-2, *dated 2nd—4th April* 1906.

Under Section 12 of the Code of Criminal Procedure, M. Venkata Rao, Sheristadar of the Chitaldrug Taluk, is invested with the powers of a Magistrate of the 3rd Class, and under Section 37 thereof, with the following additional powers, to be exercised by him till the officer appointed to act for the Amildar of that taluk joins —

(1) Power to make orders prohibiting repetitions of nuisances, Section 143, Criminal Procedure Code.

(2) Power to make orders under Section 144.
(3) Power to hold inquest, Section 174.
(4) Power to take cognizance of offences upon complaint and upon Police reports, Section 190.

The Petition Box kept at the Office of the General and Revenue Secretariat, Bangalore, will be cleared at 12 noon every day by the Secretary to Government, General and Revenue Department, and in his absence from Bangalore, by the Deputy Secretary.

By Order,
B. K. VENKATA VARADA IYENGAR,
Secy. to Govt., Gen. & Rev. Dept.

PUBLIC WORKS.

No. 310—2066, *dated* 30*th March* 1906.

The following reversions are ordered in the Engineer Establishment of the Mysore Public Works Department, with effect from 1st December 1905 :—

No.	Name	From	To	Nature of reversions	Remarks
1	Mr. T. G. Lakshmana Rao (seconded.) Mr. N. A. Anandalwar	Assistant Engineer, 2nd class, temporary rank.	Assistant Engineer, 3rd class.	Permanent ...	Consequent on the return of Mr. T. S. Seshiengar from leave.
2	Mr. C. Vijiarangam Naidu.	Assistant Engineer, 3rd class, temporary rank	Sub-Assistant Engineer, 1st class.	Permanent.	

No. 309—2065, *dated* 30*th March* 1906.

Mr. John Bhore, A.M.I.C.E., M.R.SAN.I., is appointed as Sanitary Engineer, with the pay and status of an Executive Engineer, 4th class, with effect from the 8th February 1906.

2. Mr. N. G. Krishna Iyengar, L.C.E., is appointed as Sub-Assistant Engineer, 2nd class, on probation for two years, with effect from the 22nd ultimo, and posted to the Sanitary Division.

No. 328—2127, *dated* 2*nd April* 1906.

The Government of His Highness the Maharaja of Mysore are pleased to confer the rank of Honorary Assistant Engineer on Mr. A. Nallanayagam Mudaliar, Supervisor, 1st Class, in recognition of the good work done by him in connection with the construction of the new anikat across the Hemavati river near Hemagiri.

No. 327—2113, *dated* 2*nd April* 1906.

The following extract from the *Gazette of India* dated 24th March 1906, is republished for information :—

PUBLIC WORKS DEPARTMENT.

Notification, Calcutta, the 23*rd March* 1906.

No. 44.—The following reversions are ordered in the Superior Accounts Branch :—

Name	From	To	With effect from
* Mr. W. H. Scott. *	* Examiner, Class IV, 3rd grade, supernumerary. *	* Deputy Examiner, Class I, supernumerary. *	* 15th March 1906. *

(Sd.) L. M. JACOB,
Secy. to the Govt. of India.

By Order,
W. MCHUTCHIN,
Secy. to Govt. D. P. W.

The Mysore Gazette

Vol. 41.] PUBLISHED BY AUTHORITY. [No. 14.

BANGALORE, THURSDAY, APRIL 5, 1906.

PART II.

Notifications by Govt. of India, Resident, Chief Court, &c.

BEFORE THE HON'BLE THE RESIDENT IN MYSORE, AT BANGALORE

Application in file No. 107 *of* 1906.

In the matter of the estate of V. Sundaralinga Chetty, late of the Civil and Military Station, Bangalore, but now ... ... *Deceased.*

Kokilamba Ammal .. .. *Applicant.*

Whereas Kokilamba Ammal, resident of the Civil and Military Station, Bangalore, claiming to be the widow of the said V. Sundaralinga Chetty, deceased, has applied for a certificate under Section 17, Act VII of 1889, to collect the sum of Rs. 5,354, due to the estate of the said deceased under Policy No. 335 7006, issued by the New York Life Insurance Company, Calcutta.

Notice is hereby given of the said application; and all claimants in the estate of the said V. Sundaralinga Chetty, deceased, are invited to appear before the Hon'ble the Resident at Bangalore, on Wednesday the 25th of April 1906 at 11 A.M., when the petition of the said Kokilamba Ammal will be heard, and the right to the certificate determined.

Given under my hand and seal this 30th day of March 1906.

By Order,
N. S. TIRUMALAI AIYANGAR,
Registrar.

FOREST DEPARTMENT.

AUCTION SALE OF MYSORE ELEPHANTS.

Dated 16*th March* 1906.

Sixty Elephants, partially broken, consisting of fine *Tuskers, Cows* and *Calves* in *excellent condition* will be sold by public auction, at Calicut, on Tuesday the 17th April 1906.

2. Terms of sale will be announced at the time of sale.
3. For further particulars, apply to

M. MUTHANNAH,
Conservator of Forests in Mysore.

Notice.

Attention of firewood sellers is hereby invited to this office Notification No. 279, dated 19th March 1906 advertising the sale by tender of firewood in the Government plantations of the Malur Range.

C. SESHADRIENGAR, for *Dt. Forest Officer, Kolar Dt.*

POLICE DEPARTMENT.

Dated 27th March 1906.

Descriptive Roll of a person found dead and unclaimed :—

Place where found—Near the School in the Channagiri town, close to the tunnel on the Channagiri-Chitaldrug road, on 9th March 1906.
Sex—Male.
Age—Forty years.
Complexion—Dark.
Height—Five feet four inches.
Marks of identification—Round face, marks of small-pox all over the body. Had torn clothes on.
Articles found near the body—An empty calabash was lying near the body.

MD. ZAHIRUDDIN MECCAI,
Superintendent of Police, Shimoga Dist.

MISCELLANEOUS.

BANGALORE DISTRICT.

PROCEEDINGS OF THE MEETING OF THE DISTRICT FUND BOARD OF THE BANGALORE DISTRICT, HELD ON THE 7TH MARCH 1906.

Ex-officio Members.

PRESENT.

Assistant Commissioner in charge of Treasury, Vice-President (in the chair).
Do do of Closepet group of taluks.
Do do of Bangalore do
Do do of Dodballapur do
Executive Engineer, Bangalore Division.
Deputy Inspector of Schools.

ABSENT.

District Medical and Sanitary Officer.
Deputy Commissioner and President.

Non-official Members.

PRESENT.

Mr. Gowskhan of Sarjapur, Anekal Taluk.
" Ramachandrappa, Devanhalli Taluk.
" Karigiriappa, Dodballapur
" Basappa, Nelamangala
" Seenappa, Hoskote
" Sreekanta Rao, Devanhalli Taluk.
" Mastan Saheb, Channapatna
" Velu Mudaliar, Bangalore Taluk.
" K. Puttappa, Anekal
" Kare Bhama Narasimhayya, Closepet Sub-Taluk.
" Puttamasligowda, Channapatna Taluk.
" Karnic Krishnamurti Rao, Magadi.
" Kacharakahalli Subbanna, Bangalore Taluk.

ABSENT.

Mr. Yalakkigowda, Kankanhalli Taluk. } Explanation called for.
" Balaji Row, Closepet Sub-Taluk. }

1. Read budget estimates for the year 1906-07.

I. *Resolved* that the estimated receipts for 1906-07 amounting to Rs. 77,666 be approved.

II. (1) That under expenditure the works and repairs proposed to be executed by the Public Works Department at an estimated cost amounting to Rs. 59,956 be approved, and

(2) that under expenditure the public works to be executed by the Revenue Department at an estimated cost amounting to Rs. 12,165, be approved.

2. Read District Fund estimates of the several taluks of this district for the year 1905-06.

Passed.

3. Read yadi No. 373 of 6th December 1905, from the Assistant Commissioner in charge of Dodballapur group of taluks *re* the opening of a Vaidyasala at Vadigenhalli town.

Resolved that a Vaidyasala be opened and that half the cost of maintenance not exceeding fourteen rupees per mensem be met out of the District Funds, provided the Municipality bears the other half.

4. Read docket No. 5797—L.B. 235-05-2 of 1st December 1905, from the Secretary to Government, General and Revenue Department, *re* the opening of a proper road between Kodihalli (Kankanhalli Taluk) and Javalgeri in His Majesty's Territories.

The Board is of opinion that the cost of constructing the road in question will be heavy. It is therefore resolved that the subject be taken up for reconsideration when sufficient funds are available.

5. Read Government Order No. 7864-7—L.B. (294-05)-2 of 26th January 1906, calling for the opinion of the Board *re* the levy of notice fees in Village Unions.

Resolved that the suggestion of the President of the Mysore District Board for the levy of notice fee of one anna be approved.

6. Read District Forest Officer's Mis. No. 302 of 17th October 1905, *re* the construction of a cart-track in the Tenginakal State Forest (Closepet Range).

Resolved that a sum of Rs. 157 be provided for the proposed construction of the cart-track, provided the other half of the estimated amount is paid by the Forest Department.

7. Read yadi No. 384 of 21st September 1905, from the Assistant Commissioner in charge of Closepet group of taluks *re* the construction of a kitchen and the sinking of a well in the Vadavatta bungalow, Closepet Sub-Taluk.

Resolved that the sinking of a well be approved. With regard to the construction of a kitchen, the Executive Engineer stated that the necessary provision will be made in the Public Works Department in the Provincial budget.

8. Read docket No. 89—25 of 7th January 1906, from the Executive Engineer, Bangalore Division, enquiring if the District Fund Board is prepared to pay the District Fund and Municipal Fund quotas of contribution for the cost of flooring with tiles certain Local Fund Dispensaries in the Bangalore District.

The Board has no objection to pay the District Fund contribution towards the cost of flooring certain Local Fund Dispensaries with tiles provided the Municipality will consent to pay its quota.

9. Read yadi No. 436 of 17th October 1905 from the Assistant Commissioner in charge of Bangalore group of taluks, forwarding Hoskote Amildar's report recommending the grant of an increase of pay to the mutsaddi of the Sulibele Union from Rs. 5 to 6.

Resolved that the consideration of the question be deferred, pending receipt of further information to be called for.

The next District Fund Board meeting will be held on the 26th May 1906.

T. THUMBOO CHETTY,
for *President, Dt. Board.*

Notification dated 26th March 1906.

1. It is hereby notified for public information that the undermentioned Jodi village, which has been duly attached in satisfaction of the arrears of revenue due to Government (as shown in the subjoined statement) by the said Jodidars, will be sold by public auction at the place and on the date mentioned in the annexed statement. The sale will commence at 11 A.M., on the date specified, and the village will be knocked down to the highest bidder without reserve.

2. Provided that when a village is divided into separate recognized vrittis, the Deputy Commissioner may, at his option, instead of selling the village as a whole, sell each vritti separately.

3. The purchaser will be required to deposit twenty-five per cent of the purchase money at the time of sale, and where the remainder of the purchase money may not be paid within fifteen days from the day of sale, the money so deposited shall be liable to forfeiture.

4. When such deposit shall not be made, nor the remaining purchase money paid up, the lands shall be re-sold at the expense and risk of the first purchaser.

5. Persons bidding at the sale may be required to state whether they bid on their own account or as agents, and in the latter case, to deposit a written authority signed by their principals, otherwise their bids may be rejected.

6. The sale shall be stayed, if the defaulters or any other person acting on their behalf or claiming an interest in the land, tender the full amount of the arrears of revenue with the interest and other charges, before the property is knocked down, or give satisfactory proof that the amount of arrears, etc., has been paid up, or furnish security under Section 170 of the Mysore Land Revenue Code.

7. Purchaser having completed the payment of the purchase money will, as soon as the sale has been confirmed, be placed in immediate possession, and the village will be registered in the name of the purchaser, and a certificate of sale, signed and sealed by the Deputy Commissioner, will be granted to him. It is to be distinctly understood that the Government are not responsible for errors of description or in estimated extent.

8. Provided, parties deeming themselves aggrieved by the sale, shall be at liberty to appeal to the Government within ninety days from the day of sale, and the purchase shall be conditional on the final order in such appeal.

SCHEDULE.

District	Taluk	Hobli	Village	Names of Jodidars	Estimated extent			Estimated gross rental or periz			Quit-rent payable annually to Government			Arrears of Government revenue for which village is to be sold	Date of sale, etc.
						A.	g.	Rs.	a.	p.	Rs.	a.	p.		
Bangalore	Devanhalli	Jala	Aradesahalli	Ramachandrappa and others	Kharab .	294	31	1,605	1	0	Contribution				At Aradesahalli on 3rd May 1906.
					Dry ...	528	35				1,237	0	0		
					Wet ...	220	0				Jodi				
					Garden ...	4	2				291	2	3	Subhakrutu	
											526	7	10	Sobhakrutu	
											441	13	1	Krodhi	
					Total...	1,047	28				1,259	7	2		
											1	0	0	*Notice fee	
											1,260	7	2		
											2,497	7	2	Total	

D. DEVARAJ URS,
Dy. Comr.

MYSORE DISTRICT.

Notice dated 19th March 1906.

The attention of the public is invited to the detailed notice at page 481 of Part II of the *Mysore Gazette*, dated 29th March 1906, about the alienation of Sarvamanya Dadadahalli village, Krishnarajpete Taluk, by Pleader Mr. Athicuppa Ramaiya, in favor of the Sri Malleswaraswami temple at Krishnarajpete.

H. H. SPARKES,
Dy. Comr.

CHITALDRUG DISTRICT.

OFFICIAL MEMORANDUM.

Dated 26th March 1906.

In pursuance of the instructions conveyed in Government Notification No. 11289—Ex. F. 3-1901, dated 7th January 1902, the undersigned hereby delegates the following powers to the Excise Assistant Commissioner of the Chitaldrug District, *viz*:—

(1) Power under Sections 6 and 7 of the Excise Regulation to grant permission for the import and export of liquor or intoxicating drug.

(2) Power under Section 16 to issue license for the privilege of manufacture or sale of liquor or intoxicating drug.

(3) Power under Section 26 to cancel or suspend license or permit granted under this Regulation.

(4) Power to fine up to Rs. 25 (twenty-five) licensees for breaches of license conditions.

H. RAMANUJAIENGAR,
Dy. Comr.

Notification dated 17th March 1906.

It is hereby notified that the following documents are lying unclaimed for more than two years in the undermentioned Sub-Registry Offices in the Kolar District and that they will be destroyed in accordance with Section 85 of the Registration Regulation, if they are not claimed by persons entitled to the same in the respective Sub-Registry Offices within one month from the date of the publication of this notification in the *Mysore Gazette* :—

Serial No.	Name of Sub-Registry Office	Name of the book	Number of the instrument	Date of execution	Date of registration or refusal	Name of executant	Name of claimant	Nature and value of transaction
1	Bowringpet	Book I ..	28 / 1903-04	9th July 1903	9th July 1903	Chikkappacha	Krishnamachari	Sale deed for Rs. 50.
2	Do	Do ...	373 / 1903-04	23rd January 1903	18th February 1903	Lakshamakka	Sampangaiya	Deed of cancellation of a previous maintenance deed.
3	Mulbagal	Do ...	469 / 1902-03	19th November 1901	10th June 1903	Narayanasetti	Avani Matt represented by Sankra Bharathiswami	Sale deed for Rs. 240.
4	Do	Do	167 / 1903-04	12th September 1903	17th September 1903	Mallappa, Ramanna	Mallesiah	Hypothecation deed for Rs. 35.
5	Malur	Do ...	7 / 1903-04	5th June 1903	2nd July 1903	Narasimha Reddi	Chennappa	Sale deed for Rs. 50.
6	Do	Do ...	251 / 1903-04	12th September 1903	14th November 1903	Thimmarayappa	Munisamachari	Do

K. P. PUTTANNA CHETTY,
District Registrar.

HASSAN DISTRICT.

Notice, dated 28th February 1906.

It is hereby notified that the following documents are lying unclaimed for more than two years in the undermentioned Sub-Registry Offices of the Hassan District, and that they will be destroyed in accordance with Section 85 of the Registration Regulation, No. I of 1903, if not claimed by persons entitled to the same at the respective Sub-Registry Offices within one month from the date of this notice.

Serial No.	Name of Sub-Registry Office	Number of the book	Number of the instrument	Date of execution	Date of registration or refusal	Name of executant	Name of claimant	Nature and value of transaction
1	Hassan ...	I	269 / 1903-04	30th May 1903 ...	16th September 1903 ...	K. Narasimaiya, son of Subbavadhani, residing in Jodi Krishnapura, Hassan Taluk.	Venkatasubbaiya of Krishnapura, residing in Kansika, Hassan Taluk.	Hypothecation deed for Rs. 100.
2	Do ...	I	524 / 1903-04	12th December 1903 ...	16th December 1903 ...	Dafadar Mariya Naik, son of Dafadar Sidda Naik, *alias* Thammaiya, residing in Hassan.	Cloth Merchant Sankappa, son of Devangada Sankaraiya, residing in Hassan.	Hypothecation deed for Rs. 60-
3	Manjarabad ...	I	96 / 1903-04	22nd October 1903 ...	23rd October 1903 ...	Lakshmegowda, son of Komarigowda, residing in Narur village, Manjarabad Taluk.	Ningegowda, son of Channegowda, residing in Narur village-	Sale deed for Rs. 100.
4	Do ...	I	135 / 1903-04	15th November 1903 ...	14th December 1903 ...	Manjaiya, *alias* Shamaiya, son of Manjaiya, residing in Vuchangi village, Manjarabad Taluk.	Karekoppada Venkataramanaiya, son of Arkalgud Krishnappa, residing in Vuchangi.	Mortgage deed for Rs. 200.
5	Belur ...	I	*179 / 1902-03	16th February 1903 ...	18th February 1903 ...	Krishnappa, son of Kapanipataiya of Mattigatta.	Timmasetti, son of Venkatasetti of Huskur village, Belur Taluk.	Sale deed for Rs. 500.

* Mis. document was returned from the Sub-Judge's Court on 12th December 1905.

P. R. W. WETHERALL,
District Registrar.

PROCEEDINGS OF A MEETING OF THE HASSAN DISTRICT BOARD, HELD ON SATURDAY THE 24TH FEBRUARY 1906.

PRESENT.

P. R. W. Wetherall, Esq., President.
Mr. M. A. Narayaniengar, B.A., B.L., Treasury Assistant Commissioner and Vice-President.
" Syed Amir Hassan, Senior Assistant Commissioner, Saklespur.
" B. Ramaswamaiya, B.A., B.L., General Assistant Commissioner.
" C. A. Mahadeva Sastri, B.A., B.C.E., Executive Engineer, Hassan Division.
" C. Appadurai Mudaliar, L.M.S., District Medical and Sanitary Officer.

Non-Official Members.

Mr. Lakshmi Narasimhachar.
" Keni Mahadevappa.
" W. L. Crawford.
" Igoor Mallegowda.
" K. Thammaiya.
" Habibulla Sab.
" Kencharaya Chetti.
" G. Tirunarniengar.
" Nanjanna.
" Dharanaiya Chetti.
" Venkataramaiya.
" Suryanarayana Chetti.
" Abdulla Sab.
" Mahalingegowda.
" Gurulingegowda.

ABSENT.

Ex-Officio Members.

Mr. M. K. Tirumalachar, B. A., Deputy Inspector of Schools, Hassan and Kadur Districts.

Non-Official Members.

Mr. Srikantaiya.
" H. Dasappa.
" Koneri Rama Chetti.

I. Read Government Proceedings No. 7027-35—L.B. (275-05)-2, dated 6th January 1906, requesting to obtain and forward to Government the Board's opinion in the matter of payment of rewards as an incentive for patels to exert their utmost to keep the villages clean and tidy.

Resolution.—Resolved that, owing to the impracticability of deciding which villages in each taluk are kept the first cleanest, second cleanest and third cleanest and as funds are at present not available for very many important works including drinking water wells, etc., the Board are not in favor of the proposal.

II. Read letter dated 26th December 1905, from Mr. W. L. Crawford, District Board Member, explaining the cause of his absence from four consecutive meetings of the District Board, held in 1905.

Resolution.—Resolved that it be recommended to Government that Mr. W. L. Crawford's absence from four consecutive meetings of the Board be condoned under the circumstances mentioned in his letter.

III. Read the following Orders of Government for the information of the District Board :—

(1) Government Order No. 5158-62—L.B. (158-05)-2, dated 18th November 1905, ordering that the work of sinking a well near the Chiknahalli travellers' bungalow must be put off as there is no money for it.

Resolution.—Recorded and resolved that the extreme necessity for a well in the compound of the Chiknahalli travellers' bungalow to afford drinking water for travellers and residents of the place be again brought to the notice of Government with a view to obtaining a grant from Local Funds General to provide for this very long felt and repeatedly represented want.

(2) Government Proceedings No. 7460-78—Ml. (370-05)-1, dated 18th January 1906, issuing instructions in the matter of the submission of supplemental and revised budgets by Presidents of Municipal and District Boards in the Province.

Resolution.—Recorded.

(3) Government Proceedings No. 8482-3—L. B. (195-05)-6, dated 15th February 1906, according sanction to the completion of improving sanitation at Chikkadlur and repairing the musafirkhana at Saklespur, meeting the cost from the provision of incomplete works.

Resolution.—Recorded.

(4) Government Proceedings No. 8523-4—L. B. (327-05)-2, dated 16th February 1906, according sanction to the work of removing prickly-pear around Kanakatte from the provision of the budgetted work, "dismantling fort walls in Harnahalli."

Resolution.—Recorded.

(5) Government Proceedings No. 8551-2—L. B. (329-05)-2, dated 17th February 1906, sanctioning the revised estimate for Rs. 1,002 for sinking the well at Hanbal.

Resolution.—Recorded.

(6) Government Proceedings No. 8281-2—L. B. (306-05), dated 10th February 1906, sanctioning an estimate for Rs. 2,000 for constructing a 4th class musafirkhana at Mallipatna, Arkalgud Taluk.

Resolution.—Recorded and resolved that Rs. 700 be appropriated for the work this year.

IV. Read Hassan Taluk Amildar's report No. 96, dated 26th December 1905, submitting the resolution of the Hassan Taluk Board in the matter of sanctioning a gumasta for the taluk to attend to District Fund and Municipal papers.

Read also President's memo proposing the revision and strengthening of the establishment of the President's office.

Resolution.—Resolved that owing to the great increase of work in the Municipal and District Fund Departments since the introduction of the Local Boards Regulation and Rules, both in the office of the President and in the Taluk Cutcherries, Government be moved to sanction extra establishments as per appended statement.

Staff	Existing			Proposed		
	Minimum	Rate	Maximum	Minimum	Rate	Maximum
Head Clerk	30	1	35	40	5	50
2nd "	25	1	30	30	5/2	35
3rd "	20	1	25	25	5/2	30
4th "	15	1	20	20	5/2	25
5th "	...	...	...	15	5/2	20
Record-keeper	10	...	14	10	1	15
Two peons	12	...	12	12	...	12
Total ...	112	...	132	152	...	187

V. Read General Assistant Commissioner's yadi No 977, dated 13th December 1905, submitting the statements of the two sahukars of Sravanabelagola to the effect that Mr. Gowda Padmasetti is not willing to do anything for the dispensary and that Mr. Pommaiya is willing to construct the building and pay Rs. 1,000 towards its maintenance, and stating that it is not possible to arrange for a combined charity as suggested in Government Proceedings No. 1905—L. B. (64-05)-2, dated 24th August 1905.

Resolution.—Resolved that Government be again moved to approve of the liberal offer of Mr. Pommaiya who might also be asked whether he has any objection to the establishment of a Native Vaidyasala at Sravanabelagola, since there is a regular dispensary so close as at Channarayapatna, as the Board would prefer a Vaidyasala to a regular dispensary at Sravanabelagola.

VI. Read Senior Assistant Commissioner's docket No. 89, dated 8th January 1906, submitting the resolution of the Manjarabad Taluk Board in the matter of providing Rs. 200 for repairing Hettur-Yeslurpet road, (a non-budgetted work).

Resolution.—Resolved that as there is no possibility of sanctioning any amount for repairs of the road this year, a sum of Rs. 200 be provided for it in the ensuing year's budget.

VII. Read Government Proceedings No. 8161-2—Med. (179-05)-2, dated 7th February 1906, sanctioning the proposal of the Senior Surgeon to keep things *statu quo* concerning the contemplated additions to the Government Female Dispensary at Hassan.

Resolution.—Resolved that the Board are of opinion that even after completion of the Wesleyan Mission Female Hospital, the necessity of the present Female Dispensary at Hassan would exist as female patients come from all parts of the District, and much will depend on the popularity of the Wesleyan Hospital.

Further the Board are of opinion that, as ordinary repairs such as white-washing and color-washing of the existing Female Dispensary should be undertaken for the comfort and convenience of patients now treated, Government may be requested to reconsider their order on the subject.

VIII. Read Executive Engineer's docket No. 48, dated 8—9th February 1906, forwarding for being placed before the Board a plan and an estimate amounting to Rs. 1,860, for constructing out-houses in the compound of the inspection lodge at Gindehalli, Belur Taluk.

Resolution.—Resolved that as there is no immediate urgency for this work and as it is already found difficult to allot funds for more urgent works, the same cannot be budgetted for now.

IX. Read the following estimates for budgetted works of the current year:—

Name of work	Estimate amount	Remarks
	Hassan Taluk.	
Repairing the tunnel in front of the musafirkhana at Dudda.	30	Sanctioned.
	Manjarabad Taluk.	
Constructing a cattle-pound at Hanbal, (budget provision is only Rs. 200).	535	*Resolved* that Government be moved to sanction the estimate which should be reduced to Rs. 527, since the balance available from the two deferred budgetted works, *viz.*, sinking of wells at Belgode and Kenchammana Hoskote is only Rs. 327.
	Arsikere Taluk.	
Repairing streets in Banawar ...	75	Sanctioned.
Repairing drains do ..	25	Do
Do Harnahalli ...	25	Do
Do streets do ...	100	Do
Sinking a well at Venkatapur ...	235	Deferred.
	Channarayapatna Taluk.	
Improving sanitation at Nuggehalli by opening out a road in front of Police Station.	189	Deferred.
Constructing a cattle-pound at Agrahar, Belguli.	370	Do
Sinking a well at Krishnapur ...	238	Sanctioned and since there is only Rs. 138 available out of Rs. 400 provided for wells in this taluk the balance of Rs. 200 may be appropriate by deferring the work of improving sanitation at Nuggehalli for which Rs. 200 was provided.
	Hole-Narsipur Taluk.	
Repairing chattram at Sriramdevar Dam.	374	Sanctioned. } Provision for meeting the extra cost may be taken from Rs. 400 provided for constructing culvert on Halli Mysore road.
Repairing the old Anche house at Algodnahalli.	118	Do

X. Read the following estimates for non-budgetted works :—

(1) Estimate for Rs. 150 for rivetting the drawing well at Chikmetikurke in the Arsikere Taluk for which the villagers have paid Rs. 50 as contribution.

(2) Estimate for Rs. 200 for deepening the well near the chattram at Doddametikurke.

(3) Estimate for Rs. 60 for deepening a well at Doddaramegowdana Koppal.

Resolution.—Resolved that the marginally* noted estimates be approved for the amounts noted against each as there is very great and urgent necessity for these three well works in the very waterless hobli of Kanakatte, Arsikere Taluk, and that Government sanction be obtained to the same, the cost being met from the provision made for the marginally† noted three budgetted works, which may be deferred.

* Name of work	Amount Rs.
Doddaramegowdan Koppal well ...	60
Doddametikurke	150
Chikkametikurke	150
Total ...	360

† Deferred works	Budget provision Rs.
Venkatapur well	235
Repairing cattle-pound at Karagunda ..	100
Balance available out of the provision madde for constructing a cattle-pound at Kalzadi	42
Total ...	377

XI. Read Senior Assistant Commissioner's yadi No. 408, dated 12th February 1906, submitting an estimate for Rs. 45 for repairing the boat of the Igur ford.

Resolution.—Resolved that the estimate for Rs. 45 be sanctioned with the understanding that the repairs now undertaken will last for a period of three years as Aigur Mokthesar patel Mallegowda promises to get the work properly done under his supervision.

XII. Read correspondence ending with Senior Assistant Commissioner's yadi No. 443, dated 24th February 1906, submitting his opinion as regards the Rajanasiriyur well.

(*Vide* Subject No. II of District Board Proceedings dated 25th September 1905.)

Resolution.—Resolved that as recommended by the Senior Assistant Commissioner in correspondence ending with yadi No. 443, dated 24th February 1906, now read out before the Board, a bill for Rs. 216 be obtained for payment to the contractor Kallu Rao, who has now agreed to this settlement before the Board.

XII. Read yadi No. 1179, dated 20th January 1906, from the General Assistant Commissioner forwarding the resolution of the Hole-Narsipur Taluk Board, as regards the appointment of a care-taker to the late Mr. Krishnappa's chattram at Mavinakere handed over to the District Board.

Resolution.—Resolved that the chattram be taken over to the charge of the District Board from the donor N. K. Subba Rao, son of the deceased pensioned Amildar Mr. N. D. Krishnappa, and that provision of Rs. 3 per month be made for a care-taker, and that sanction of Government be obtained to the same.

XIV. The construction of the musafirkhana at Kenchammana Hoskote, is just about to be completed and so a care-taker at Rs. 6 per month is to be provided.

Resolution.—Resolved that provision be made in the ensuing year's budget for a care-taker at Rs. 6 per mensem and that sanction of Government be obtained to the extra cost.

XV. Read District Fund budget estimates, compiled by the Finance Committee, of the Hassan District Board for 1906-07.

Resolution.—Resolved that the budget estimates as now modified and passed be sent up to Government.

XVI. Read the following Government Orders for the information of the Board :—

1. Government Proceedings No. 8694-6—L. B. (338-05)-2, dated 23rd February 1906, sanctioning the entertainment of an additional cooly for the Local Fund Dispensary at Saklespur.

Resolution.—Recorded and resolved that provision of two-thirds of this extra cost be made in the ensuing District Fund budget.

2. Government Proceedings No. 7799-841—San. (134-05)-8, dated 26th January 1906, exempting certain officers and other persons from the operation of Plague Passport Rules.

Resolution.—Recorded with a resolution that Government be addressed with a view to ascertain whether exemptions by the Mysore Government will hold good in the Madras Presidency and *vice versa*, and if not whether the same can be obtained.

XVII. Read letters from the following members stating their inability to attend the meeting:—

1. Deputy Inspector of Schools, Hassan and Kadur Districts.
2. Mr. Sundekere Srikantaiya.
3. „ H. Dasappa.
4. „ Koneri Ramasetti.

Resolution.— Recorded.

XVIII. Resolved that the next meeting be fixed for Saturday the 12th May 1906.

P. R. W. WETHERALL,
President.

KADUR DISTRICT.

Abstract Notification dated 16th March 1906.

It is hereby notified that the exclusive privilege of collecting tolls at Tadasa (Bhadra bridge, Hariharpur (Tunga bridge), Balehonnur (Bhadra bridge) will be sold by public auction on the 14th May 1906 at the Sub-Taluk Cutcherry at Yedahalli; on the 16th, at the Taluk Cutcherry at Koppa; and on the 19th, at the travellers' bungalow at Balehonnur, respectively.

M. CHENGIAH CHETTY,
Dy. Comr., Kadur Dt.

IN THE COURT OF THE MUNSIFF AT KOLAR.

Miscellaneous Application No. 411 of 1905-06.

In the matter of the estate of Venkatasamaiya, resident of Ganjigunte in the Mulbagal Taluk ... . *Deceased.*

Venkatesa, minor, by guardian and mother Kaveramma ... ... *Applicant.*

Whereas Venkatesa, minor, by guardian and mother Kaveramma, resident of Sillangere in the Kolar Taluk, claiming to be the son of the said Venkatasamaiya, deceased, has applied to this Court for a certificate under Regulation VII of 1901, to collect debts payable to the extent of Rs. 100, in respect of the estate of the said Venkatasamaiya, deceased, resident of Ganjigunte in the Mulbagal Taluk.

Notice is hereby given of the said application; and all claimants in the estate of the said Venkatasamaiya, deceased, are invited to appear in this Court on Saturday the 14th day of April 1906, when the petition of the said Venkatesa, minor, by guardian and mother Kaveramma, applicant, will be heard, and the right to the certificate will be determined.

Given under my hand and the seal of the Court this 30th day of March 1906.

J. E. HOLT,
Munsiff.

IN THE COURT OF THE MUNSIFF AT CHIKBALLAPUR.

Miscellaneous Application No. 401 of 1905-06.

In the matter of the estate of Vyasachar's son Narasimhachar, resident of Dibbur ... ... *Deceased.*

1. Vasudevappa, son of Vyasachar ... ...
2. Raghavendrappa, son of do ... ...
3. Narasimhamurti, son of Venkatakrishnappa, deceased (son of Vyasachar and brother of 1st and 2nd applicants) ... ... *Applicants.*
4. Vyasaraya, minor (brother of 3rd applicant) ... ...
5. Subbanna, minor (brother of do) ... ...

Whereas the applicants mentioned above, residents of Bagepalli, 1st and 2nd, brothers of the deceased Narasimahachar, and 3rd, 4th and 5th claiming to be the sons of the said Narasimhachar, deceased, have applied to this Court for a certificate under Regulation VII of 1901, to collect debts payable in respect of the estate of Narasimhachar, deceased, resident of Dibbur.

Notice is hereby given of the said application; and all claimants in the estate of the said Narasimhachar, deceased, are invited to appear in this Court on Saturday the 14th day of April 1906, when the petition of the said first, second, third, fourth and the fifth applicants will be heard, and the right to the certificate will be determined.

Given under my hand and the seal of the Court this 27th day of March 1906.

P. MAHADEVAIYA, *Munsiff.*

IN THE COURT OF THE MUNSIFF AT KOLAR GOLD FIELDS.

Miscellaneous Application No. 269 *of* 1905-06.

In the matter of the estate of Santhaji Bhirjay ... ... *Deceased.*

Whereas applicant Ratha Bai, resident of Masti, Malur Taluk, claiming to be the widow of the said Santhaji Bhirjay, deceased, has applied to this Court for a certificate under Regulation VII 1901, to collect debts payable in respect of the estate of Santhaji Bhirjay, deceased, resident of Masti.

Notice is hereby given of the said application; and all claimants in the estate of the said Santhaji Bhirjay, deceased, are invited to appear in this Court on Tuesday the 5th day of June 1906, when the petition of the said Ratha Bai, applicant, will be heard and the right to the certificate will be determined.

Given under my hand and the seal of the Court this 22nd day of March 1906.

T. S. A. D'CRUZ, *Munsiff.*

IN THE COURT OF THE MUNSIFF OF MADDAGIRI.

Miscellaneous Case No. 189 *of* 1905-06.

Dated 26*th March* 1906.

In the matter of the application of Nyatha Chikka Thimma, resident of Muthyalammanahalli, Maddagiri Taluk, praying to be declared an insolvent.

The above application coming on for hearing before T. Venkoba Rao, Esq., B.A., B.L., Munsiff, in the presence of Messrs. M. Raghavendra Rao and B. Ranga Rao, Pleaders for the petitioner and 1st counter-petitioner, respectively, it is hereby ordered that the said Nyatha Chikka Thimma be declared an insolvent

SCHEDULE OF DEBTS.

No.	Name of creditor	Amount			When contracted
		Rs.	a.	p.	
1	Rayiga	25	0	0	Due under decree of this Court in O. S. No. 280 of 1903-04.
2	Thimma	15	0	0	Being the amount advanced as a hand-loan.
3	Rangappa	19	0	0	Do do

T. VENKOBA RAO, *Munsiff.*

IN THE COURT OF THE MUNSIFF OF CHITALDRUG.

Insolvency Mis. No. 428 *of* 1905-06.

In the matter of the application of Shanbhog Bheemasena Rao, son of Sivappa *alias* Krishna Rao, resident of Ganganarsi, Harihar Sub-Taluk, praying to be declared an insolvent.

The above application coming on for hearing before S. Krishna Rao, Esq., in the presence of Mr. M B. Krishna Rao, Pleader for the petitioner, the counter-petitioners being absent *ex parte*, it is hereby ordered that the said Shanbhog Bheemasena Rao be declared an insolvent and that S. Somasundra Rao, the record-keeper of this Court, be appointed a receiver of the insolvent's property.

No	Name of creditor	Amount			When contracted
		Rs.	a.	p.	
1	Nattagi and Narasajee ...	31	3	1	Due under a decree in S. C. No. 878 of 1904-05 on the file of this Court.
2	Mahadevappa ...	90	0	0	Due on a bond and on accounts.
3	Ramanna, minor, by his guardian Sesha Dikshita.	260	0	0	Due under a decree of the late Honnali Munsiff's Court.
4	Mahadeva Naika ..	75	0	0	Due on a pro-note.
5	M. Venkamma ...	250	0	0	Due under a decree of the late Honnali Munsiff's Court.

Given under my hand and the seal of the Court this the 16th day of March 1906.

S. KRISHNA RAO, *Munsiff.*

CHANNELS DIVISION.

The 24th March 1906.

The attention of the public is invited to the notification published on page 423 of the *Mysore Gazette,* Part II, dated 22nd March 1906, regarding the tenders required for the extension of Chamraj Channel beyond Hosagrahar.

V. AIYASWAMI IYER,
Executive Engr., Channels Dn.

GOVERNMENT CENTRAL BOOK DEPOT.

Notification dated 14th March 1906.

Copies of the Mysore Chief Court Law Reports, Vol. VI (January to December 1901) and Vol. VIII (January to December 1903), are available for sale at the Central Book Depot, Bangalore. The price of each volume is Rs. 5 only, exclusive of postage.

S. ABDUL HAI,
Curator, Govt. Central Book Depôt, Bangalore.

Notice dated 14th March 1906.

The undersigned hereby gives notice that a month after date, he intends moving the Honorable Chief Court to enrol him as an Advocate thereof.

S. VENKATESAIYA, B.A., B.L.

MYSORE GOVERNMENT PRESS, BANGALORE.

TENDER FOR THE SUPPLY OF PRINTING AND MISCELLANEOUS ARTICLES.

Notice No. 896, dated 16th March 1906.

Sealed tenders for the supply of Printing and Miscellaneous Articles for the use of the Government Press and Jail Press, Bangalore, for the official year 1906-07, will be received by the Superintendent at his office at the Government Press, Bangalore, up to 20th April 1906.

2. Tenders should be superscribed "Tender for the Supply of Printing and Miscellaneous Articles for 1906-07," and should be accompanied by a deposit of Rs. 100 as earnest money, which will be returned after the disposal of tenders to all unsuccessful tenderers and be liable to be forfeited if the successful tenderer or tenderers fail to fulfil the conditions of his or their contract.

3. Requisite standard samples of articles may be seen at the Mysore Government Press, Bangalore, any day, except Sundays and holidays, between the hours of 11 A.M. and 5 P.M.

4. The quantities specified in the schedule annexed hereunder *are only probable requirements,* which the Superintendent is *not bound* to *purchase in full* from the successful tenderer or tenderers, who must be prepared to make deliveries of all articles from time to time on receipt of indents from the Government Press. All supplies will be subject to examination by the Superintendent. Articles not considered up to quality and sample will be rejected and will remain at the risk of the contractors.

5. Payments will be made (after 1st July 1906) on bills to be checked by the Superintendent of the Government Press.

6. Tenders must be submitted on printed forms which can be had on application to the Superintendent, Government Press, Bangalore, accompanied by one anna for postage to places outside Bangalore.

7. Tenders must specify the rate at which the tenderers agree to supply; these rates must include all charges up to delivery at the office of the Government Press, Bangalore.

8. Any article not mentioned in the annexed schedule, which may be required, shall be supplied by the successful tenderer or tenderers at the market rate, should the Superintendent so require him or them to do.

9. The successful tenderer or tenderers will be bound to make good to Government any loss which may arise from his or their failure, or by Government having to purchase the articles specified in the schedule in the local market or elsewhere at higher rates than those contracted for.

10. The successful tenderer or tenderers will execute an agreement in half-a-rupee stamp paper binding himself or themselves to the above conditions and stipulations.

11. Tenders will be opened by the Superintendent, Mysore Government Press at Bangalore, at 2 P.M., on Saturday the 21st April 1906, in the presence of such tenderers as may choose to attend.

12. The Superintendent reserves to himself the right of rejecting any tender without assigning any reason therefor.

Schedule of Articles.

No.	Description of article	Probable quantity required	Per
1	Kerosene oil, American standard, 125° (*Chester brand*)	200 tins ...	Tin*
2	Cocoanut oil	30 maunds ...	Maund of 25 lbs.
3	Cotton waste	20 maunds .	Do
4	Matches (boxes)	4 dozens ..	Dozen.
5	Eggs	150 ..	Each.
6	Limes	250 ..	Each.
7	Mutton suet	20 lbs ...	Pound.
8	Tamarind	2 viss ..	Viss.
9	Castor oil	5 viss ..	Viss.
10	Gum, white	6 lbs. ...	Pound.
11	Baskets (bamboo)	2 dozens ..	Dozen.
12	Buckets (zinc)	1 dozen ...	Each.
13	Brooms (cocoanut)	6 dozens ...	Dozen.
14	Jaggory	3 maunds ...	Maund.
15	Camphor	40 tolas ...	Tola.
16	Ropes (aloe) length 10 yards	50 ..	Each.
17	Eyelets	24 boxes of 1 gross each ...	Box.
18	Country sealing wax (sticks)	1 dozen ...	Dozen.
19	Iron wire nails of sizes	40 lbs. ...	Pound.
20	Brass screw rings	7 gross ...	Gross.
21	Asbestos	20 lbs. ..	Pound.
22	Fuller's earth	3 maunds ...	Maund of 25 lbs.
23	Lubricators	1 dozen ..	Each.
24	Screws, iron, of sizes	3 gross ...	Gross.
25	Chalk	2 lbs. ...	Pound.
26	Cotton	2 lbs. ..	Pound.
27	Gunny needles	1 dozen ...	Dozen.
28	Linseed oil	6 bottles ...	Bottle.
29	Spindle oil	1 maund ...	Maund of 25 lbs.
30	Wheat flour	50 maunds ...	Do
31	Sulphate of copper	40 lbs. ...	Pound.
32	English coal	3 cwt. ...	Cwt.
33	Charcoal	12 bags ...	Bag.
34	China paper	2 dozens (pieces)	Dozen.
35	Violet ink for stamping	2 dozens ...	Dozen.
36	Rope, cotton (length of 10 yards)	4 dozens ...	Dozen.
37	Roller composition	500 lbs. ...	Pound.
38	Mallets, good quality	2 dozens ...	Dozen.
39	Planers	1 dozen ..	Dozen.
40	Oil-feeders	1 dozen ...	Dozen.
41	Turpentine	1 gal. ..	Gallon.
42	Machine tape, half inch	4 rolls ..	Roll of 40 yards.
43	Well seasoned teakwood side sticks, 36 inches ...	50 dozens ..	Dozen.
44	English binder's calico of assorted colors	100 yards ..	Yard.
45	Country do do	400 yards ...	Yard.
46	Horrock's sheeting (double width)	50 yards ...	Yard.
47	Back cloth (book binding)	100 yards ...	Yard.
48	Brown holland	100 yards ...	Yard.
49	Drill cloth	50 yards ...	Yard.
50	Straw-board of different weights	10,000 lbs. ...	Pound.
51	Stitching twine Nos. 2 and 4	100 lbs. ...	Pound.
52	Cotton, reel thread	5 dozens ...	Dozen.
53	Sheep-skin (country)	500 lbs. ...	Pound.
54	English law calf-skins	50 skins ...	Each.
55	Do calf-skins assorted colors	50 skins ...	Each.
56	Do roan do	50 skins ...	Each.

* Empty tins to be taken back by the contractor.

No.	Description of article	Probable quantity required	Per
57	Morocco skin	50 skins ...	Each.
58	Head bands, assorted colors	100 yards ...	Yard.
59	Page cord, English	50 balls ..	Ball.
60	Binder's bodkins	4 dozens .	Dozen.
61	Do needles	12 dozens ..	Dozen.
62	Glue pots	6 ...	Each.
63	Glue	100 lbs. ...	Pound.
64	Paste kettles	6 ...	Each.
65	Gold leaf, good quality	6 dozen books ...	Each book.
66	Pig lead	2,000 lbs. ...	Pound.
67	Antimony	500 lbs. ...	Pound.
68	Steel files of sizes	3 dozens ...	Dozen.
69	Lye brushes	4 dozens ..	Dozen.
70	Ruling brass pen of sizes in sheets	25 sheets ...	Sheet.
71	Do ink powders, blue	2 lbs. ..	Pound.
72	Pearl ash	500 lbs. .	Pound.
73	Gold bronze	1 dozen packets .	Packet.
74	Silver do	Do ...	Packet.
75	Emery cloth	50 sheets ..	Shet.
76	Sand paper	5 dozens ...	Dozen.
77	Press girthing with rivets	48 yards ...	Yard.
78	Bellows	½ dozen ...	Each.
79	Compositor's bodkins	12 dozens ...	Each.
80	Zinc or brass-bottomed galleys 21″ × 13″ and 25″ × 11″ (outside measurement)	12 dozens ...	Each galley
81	Firewood, chopped	10 bandies of 60 maunds .	Bandy.
82	Tar	5 maunds ..	Maund of 25 lbs.
83	Soap (bar)	6 boxes ...	Box
84	Cartage	300 bandy-loads.	Each.
85	Bleached long cloth	100 yards ...	Yard
86	Wrought-iron book chases, double foolscap, with fixed cross bars, 28″ × 18″ inside measurement	100 ..	Each
87	Do do foolscap folio 15″ × 9½″ ...	200 ...	Do
88	Do heading chases, foolscap 19″ × 5″ ...	50 ...	Do
89	Do do demy 36″ × 8″	50 ...	Do
90	Do do royal 40″ × 8¾″	50 ..	Do

C. H. YATES,
Supt., Govt. Press.

MORTUARY REGISTER.

FOR THE WEEK ENDING 23RD FEBRUARY 1906.

Bangalore City.

Estimated population according to the Census of 1901. { Males ... 35,964; Females ... 33,483 } Total ... 69,447

Diseases	M.	F.	Total
Plague	3	9	12
Cholera	...	...	...
Small-pox	...	3	3
Fevers	3	6	9
Bowel-complaints ...	4	8	12
Suicide	...	...	...
Wounding	1	...	1
Accident	...	...	...
Snake-bite or killed by wild beasts	...	...	...
All other causes ...	26	28	54
Total ..	37	54	91
Births during the week ...	22	9	31

Mysore City.

Estimated population according to the Census of 1901. { Males ... 34,328; Females ... 33,783 } Total .. 68,111

Diseases	M.	F.	Total
Plague	...	...	...
Cholera		...	...
Small-pox	2	...	2
Fevers	...	3	3
Bowel-complaints ...	3	3	6
Suicide	...	...	...
Wounding	...	...	...
Accident	...	...	...
Snake-bite or killed by wild beasts	...	.	...
All other causes ..	14	19	33
Total ...	19	25	44
Births during the week ..	13	15	28

FOR THE WEEK ENDING 2ND MARCH 1906.

Diseases	M.	F.	Total	Diseases	M.	F.	Total
Plague	10	7	17	Plague	...	...	...
Cholera	...	...	...	Cholera	..	...	...
Small-pox	1	...	1	Small-pox	1	1	2
Fevers	5	10	15	Fevers	2	2	4
Bowel-complaints ...	3	4	7	Bowel-complaints ...	5	2	7
Suicide	...	...	...	Suicide	...	...	...
Wounding	...	...	...	Wounding	...	...	...
Accident	...	...	...	Accident .. .	...	...	...
Snake-bite or killed by wild beasts ...	...	...	...	Snake-bite or killed by wild beasts	...	...	...
All other causes ...	35	26	61	All other causes ..	18	9	27
Total ...	54	47	101	Total ...	26	14	40
Births during the week ...	20	20	40	Births during the week ...	10	12	22

By Order,
T. S. NANJAPPA,
Personal Asst. to the Senior Surgeon and Sany. Comr. with the Govt. of Mysore.

OFFICE OF THE COMPILER, "MYSORE GAZETTE."

NOTICE.

RATES OF SUBSCRIPTION, &c.

What edition	Period	Subscription in Mysore	Postage for places out of Mysore
		Rs. a.	Rs. a.
English *or* Kanarese edition ...	12 months.	3 8	1 12
Ditto	6 ,,	1 12	0 14
Ditto	3 ,,	0 14	0 7
English *and* Kanarese editions	12 ,,	7 0	3 8
Ditto	6 ,,	3 8	1 12
Ditto	3 ,,	1 12	0 14
Single copy of current year's Gazette, exclusive of Regulations and orders	...	0 8	Exact cost.
Prices for copies of previous years can be ascertained on application.	...	...	...

Under Government Notification No. 155, dated 2nd July 1891, the Kanarese portion of the *Mysore Gazette* will be supplied to Shanbhogs and Patels within the Province at *half* of the above rates on production of certificate from Amildar of the taluk to the effect that such applicant is *bona fide* on duty at the time.

Under Government Order No. 24205-6—G. 6200, dated 21st June 1895, the above privilege is extended to Nad Patels also.

C. H. YATES,
Compiler, Mysore Gazette.

CINCHONA FEBRIFUGE.

Cinchona Febrifuge can be purchased by all Government Officers and by any one taking *six pounds* at a time from the Superintendent, Botanical Garden, Calcutta, at the following rates:—per four-ounce tin, *Rs.* 2-8; per eight-ounce tin, *Rs.* 5; per pound tin, *Rs.* 10. The general public can be supplied by the Superintendent, Botanical Garden, *for Cash only*, at the undernoted rates:—per four-ounce tin, *Rs.* 3; per eight-ounce tin, *Rs.* 6; per pound-tin, *Rs.* 12. This medicine is also sold by the principal European and Native Druggists in Calcutta. Postage—four annas per four-ounce tin, eight annas per eight-ounce tin, and twelve annas per pound-tin in addition to the foregoing rates.

MYSORE GOVERNMENT METEOROLOGICAL DEPARTMENT.

Daily Means of Observations for the Week Sunday 18th to Saturday 24th March 1906.

No.	BANGALORE	Sunday 18	Monday 19	Tuesday 30	Wednesday 31	Thursday 22	Friday 23	Saturday 24
1	Barometer red. to 32° F.	26·917	26·894	26·913	26·933	26·952	26·915	26·916
2	Daily Barometric range	·137	·149	·135	·126	·132	·159	·126
3	Mean Dry Temperature in shade	77·8	77·4	79·0	77·8	77·1	78·4	79·8
4	Maximum do	90 0	90·9	91·6	87·6	90·0	92·2	91·8
5	Minimum do	66·1	64·3	67·8	68·4	64·9	65·3	68·3
6	Daily range of do	23·9	26·6	23·8	19·2	25·1	26·9	23·5
7	Mean Wet Temperature in shade	65·2	61·1	65·5	65·4	65·4	65·7	65·1
8	Minimum do	63·2	60·1	58·8	64·1	63·1	62·2	62·5
9	Pressure of Aqueous Vapour	·489	333	·554	·482	·466	·496	·496
10	Humidity	49	33	54	50	48	47	49
11	Wind Vely. in Miles p. day to 8 A. M	156	120	142	249	240	167	156
12	Mean Wind Direction	W b N	N N W	S E b S	S E b E	E b S	S b W	S E b E
13	Rainfall in inches to 8 A.M.	0 60	·0	0	0	0	0	0
14	Total Rainfall from 1st January	1·64	1·64	1·64	1·64	1·64	1·64	1·64
15	Per cent of Cloudy Sky	40	0	13	57	3	10	0
16	Character of Weather	Thunderstorm	Dust haze	Distant lightning	Distant lightning	Dust haze	Dust haze	Dust haze

23

MYSORE GOVERNMENT METEOROLOGICAL DEPARTMENT.

Daily Means of Observations for the Week Sunday 18th to Saturday 24th March 1906.

No.	MYSORE	Sunday 18	Monday 19	Tuesday 20	Wednesday 21	Thursday 22	Friday 23	Saturday 24
1	Barometer red. to 32° F.	27·409	27·272	27·375	27·398	27·415	27·390	27·381
2	Daily Barometric range	·159	·177	·151	·141	·155	·172	·133
3	Mean Dry Temperature in shade	81·9	80·7	81·7	79·9	81·3	80·7	82·1
4	Maximum do	94·2	94·7	95·9	91·2	92·0	94·0	95·0
5	Minimum do	70·6	66·7	68·8	70·0	70·5	68·0	69·7
6	Daily range of do	23·6	28·0	27·1	21·2	21·5	26·0	25·3
7	Mean Wet Temperature in shade	66·7	64·3	67·6	70·0	69·0	66·3	67·8
8	Minimum do	63·8	62·5	61·0	67·1	66·0	60·8	63·8
9	Pressure of Aqueous Vapour	·486	·377	·546	·625	·582	·468	·541
10	Humidity	42	32	47	59	54	42	48
11	Wind Vely. in Miles p. day to 8 A.M.	178	132	149	181	188	136	141
12	Mean Wind Direction	N	S E b E	S b W	E b S	S E b E	S E b E	E S E
13	Rainfall in inches to 8 A.M.	0	0	0	0·22	0	0	0
14	Total Rainfall from 1st January	0·53	0·53	0·53	0·75	0·75	0·75	0·75
15	Per cent of Cloudy Sky	100	0	27	100	90	10	20
16	Character of Weather	Cloudy	Fine clear	Fine	Thunderstorm	Cloudy	Fine passing clouds	Fine passing clouds

MYSORE GOVERNMENT METEOROLOGICAL DEPARTMENT.

Daily Means of Observations for the Week Sunday 18th to Saturday 24th March 1906.

No.	HASSAN	Sunday 18	Monday 19	Tuesday 20	Wednesday 21	Thursday 22	Friday 23	Saturday 24
1	Barometer red. to 32° F.	26·871	26·828	26·844	26·850	26·876	26·857	24·847
2	Daily Barometric range	·138	·157	·136	·137	·136	·143	·123
3	Mean Dry Temperature in shade	77·3	76·2	76·4	76·5	76·6	76·1	77·0
4	Maximum do	95·2	94·4	94·1	92·2	91·9	93·4	94·1
5	Minimum do	62·0	58·6	59·6	62·0	62·4	60·1	61·9
6	Daily range of do	33·2	35·8	34·5	30·2	29·5	33·3	32·2
7	Mean Wet Temperature in shade	63·4	59·3	59·0	63·6	65·0	60·2	64·4
8	Minimum do	59·7	52·4	51·3	54·8	60·6	55·7	57·2
9	Pressure of Aqueous Vapour	·378	·280	·250	·493	·458	·276	·441
10	Humidity	35	26	22	47	42	25	39
11	Wind Vely. in Miles p. day to 8 A.M.	50	49	37	40	54	47	46
12	Mean Wind Direction	N b E	S W	S b E	S S E	S b W	E S E	E b S
13	Rainfall in inches to 8 A. M.	0	0	0	0	0	0	0
14	Total Rainfall from 1st January	0·03	0·03	0·03	0·03	0·03	0·03	0·03
15	Per cent of Cloudy Sky	30	3	17	90	27	10	27
16	Character of Weather	Fine ; sultry	Fine clear	Fine	Dust haze	Dust haze	Dust haze ; sultry	Dust haze ; sultry

MYSORE GOVERNMENT METEOROLOGICAL DEPARTMENT.

Daily Means of Observations for the Week Sunday 18th to Saturday 24th March 1906.

No.	CHITALDRUG	Sunday 18	Monday 19	Tuesday 20	Wednesday 21	Thursday 22	Friday 23	Saturday 24
1	Barometer red. to 32° F.	27·513	27·467	27·482	27·484	27·510	27·492	27·484
2	Daily Barometric range	·142	·164	·153	·145	·145	·160	·136
3	Mean Dry Temperature in shade	80·5	83·4	82·8	81·4	83·1	82·9	83·6
4	Maximum do	93·3	95·0	96·0	93·9	96·3	94·4	95·3
5	Minimum do	67·9	72·3	71·1	70·5	71·1	71·5	73·1
6	Daily range of do	25·4	22·7	24·9	23·4	25·2	22·9	22·2
7	Mean Wet Temperature in shade	67·4	67·4	60·1	65·8	63·7	61·8	66·4
8	Minimum do	61·2	60·6	54·0	58·4	56·8	56·7	62·7
9	Pressure of Aqueous Vapour	·534	·494	·244	·539	·342	·272	·417
10	Humidity	46	40	20	47	26	21	34
11	Wind Vely. in Miles p. day to 8 A. M	126	133	113	83	111	98	95
12	Mean Wind Direction	N W b N	W N W	N W b N	S E b S	N E	N W b W	E b N
13	Rainfall in inches to 8 A. M.	0	0	0	0	0	0	0
14	Total Rainfall from 1st January	1·24	1·24	1·24	1·24	1·24	1·24	1·24
15	Per cent of Cloudy Sky	0	0	0	50	13	0	0
16	Character of Weather	Fine clear	Fine clear	Fine clear	Fine	Fine passing clouds	Fine clear	Fine clear

Dated 29th March 1906.

J. COOK, *Director of Meteorology.*

Abstract Statement of Plague Cases and Deaths in the Mysore Province for the week ending Friday the 30th March 1906.

Place	During the week ending 30th March 1906		During the week ending 23rd March 1906		Figures for the corresponding week of last year		Number of infected villages
	Attacks	Deaths	Attacks	Deaths	Attacks	Deaths	
Bangalore City	9	7	13	10	28	25	...
Mysore City	...	...	...	...	4	5	...
Bangalore District	1	1	2	1	27	23	2
Mysore District	...	...	1	2	5	2	2
Kolar District (excluding Gold Fields)	2	...	3	3	3	3	2
Kolar Gold Fields	5	6	10	4	2	2	3
Tumkur District	...	...	3	3	11	10	...
Hassan District	...	...	3	1	...	...	2
Chitaldrug District	2	3	7	6	6	6	1
Kadur District	1	1	1	1	11	10	2
Shimoga District	7	6	11	13	...	1	6
Total ...	27	24	54	44	97	87	20

T. S. NANJAPPA,
for *Offg. Sr. Surgn. & Sany. Comr., M. G.*

The Mysore Gazette.

Vol. 41.] PUBLISHED BY AUTHORITY. [No. 14.

BANGALORE, THURSDAY, APRIL 5, 1906.

PART III.

Legislative Measures and Rules thereunder.

REGULATION No. I OF 1906.

(PASSED ON THE 16TH DAY OF MARCH 1906.)

A REGULATION TO MAKE PROVISION FOR COMPULSORY VACCINATION IN MYSORE.

Preamble.

Whereas it is expedient to make provision for compulsory vaccination in Mysore; His Highness the Maharaja is pleased to enact as follows:—

Short title.

1. (1) This Regulation may be called "The Mysore Vaccination Regulation, 1906."

Extent.

(2) And it extends to the whole of Mysore.

Government may declare vaccination compulsory in any local area.

2. (1) The Government may, by notification in the official Gazette, declare that vaccination shall be compulsory in any local area from and after a date and during a period to be fixed in such notification, and under such rules as may from time to time be made by Government, or under such by-laws as may, with the approval of Government, be made from time to time by a local authority empowered by Government in this behalf.

(2) The Government may, in like manner, cancel or modify any such declaration.

Penalty.

(3) For every breach of a rule or by-law under Sub-Section (1) the offender shall be liable to a fine not exceeding fifty rupees.

Provided that no penalty shall be imposed on any person by reason of non-vaccination if he has already had small-pox.

P. N. KRISHNA MURTI,
Dewan of Mysore.

29

The Mysore Gazette.

VOL. 41.] PUBLISHED BY AUTHORITY. [No. 14.

BANGALORE, THURSDAY, APRIL 5, 1906.

PART IV.

OFFICIAL PAPERS.

Season Report for the Week ending with the 13th Saturday in 1906 (31st March 1906)

District and Station.	Rainfall up to 8 A.M. on Saturday. This week.		Last ten years' average for the corresponding week.		Up to the end of the week from 1st January 1906. This year.		Average of past ten years.		Excess (+) or defect (—) of column 4 compared with column 5.		Price of food grains in seers per rupee and market fluctuations in prices of food grains.			
1	2		3		4		5		6		7			
	I.	c.	I.	c.	I.	c.	I.	c.	I.	c.		This week.	Past week.	Past ten years' fortnightly average.
												Seers	Seers	Seers
BANGALORE.														
Bangalore C. & M. Station ...	...	..	...	..	.	..	.		..	..				
" City & Taluk...	..	...	...	29	1	83	...	84	+ 0	99	Rice, 2nd sort.	7·25	7·25	9·08
Hoskote ...	...	.	...	49	..	50	.	71	— 0	21				
Dodballapur ...	...	...	...	3	..	43	...	81	— 0	38	Ragi	17·00	16·00	22·43
Nelamangala ...	...	...	...	14	.	73	...	47	+ 0	26	Kulthi	12·00	12·00	...
Kankanhalli ...	..	...	..	9	...	63	..	54	+ 0	9	Kadale	9·00	8·00	10·13
Magadi ...	..	.	..	9	..	...	...	52	— 0	52				
Channapatna ...	...	..	...	17	.	14	..	74	— 0	60				
Anekal ...	..	...	...	16	2	7	.	69	+ 1	38				
Devanhalli ...	...	...	...	42	..	52	...	63	— 0	11				
Closepet ...	..	...	...	12	...	..	.	27	— 0	27				
District average...	...	...	...	23	.	69	.	62	+ 0	7				
KOLAR.														
Kolar ...	...	...	...	7	...	52	...	69	— 0	17				
Bowringpet ...	...	...	...	7	...	9	...	73	— 0	64	Rice, 2nd sort.	7·50	7·50	9·20
Chintamani ...	...	...	.	14	1		...	67	+ 0	33				
Mulbagal ...	...	...	...	26	1	33	1	28	+ 0	5	Ragi	15·00	15·00	23·60
Sidlaghatta ...	...	...	...	8	...	36	...	66	— 0	30	Kulthi	14·00	14·00	...
Chikballapur ...	..	...	...	23	2	15	1	16	+ 0	99	Kadale	9·00	8·00	9·00
Bagepalli ...	...	...	...	5	1	20		32	+ 0	8				
Goribidnur ...	...	..	...	5	...	60	...	36	+ 0	24				
Malur ...	..	...	..	12	...	95	...	42	+ 0	53				
Srinivaspur ...	...	...	...	23	1	9	..	78	+ 0	31				
Gudibanda ...	...	...	...	4	...	73	...	56	+ 0	17				
District average...	..	..	..	12	..	93	...	69	+ 0	24				
TUMKUR.														
Tumkur ...	..	...	..	2	1	16	...	84	+ 0	32				
Maddagiri ...	...	...	...	...	...	28	..	35	— 0	7				
Chiknayakanhalli ..	...	...	..	9	1	40	..	50	+ 0	90	Rice, 2nd sort.	7·50	8·00	9·25
Sira ...	...	..	...	4	1	37	...	30	+ 0	7				
Gubbi ...		..	...	1	..	36	...	45	— 0	9	Ragi	16·00	18·00	25·50
Tiptur ...	...	...	...	7	...	20	.	19	+ 0	1	Kulthi	12·00	14·00	...
Pavagada ...	...	...		..	...	..	...	24	— 0	24	Kadale	8·10	10·00	9·30
Kunigal ...	...	...	.	3		44	...	23	+ 0	21				
Koratagere ...	...	..	...	1	1	10	..	49	+ 0	61				
Turuvekere ...	...	...	...	...	...	35	...	13	+ 0	22				
District average...	...	...	..	3		67	...	37	+ 0	30				

District and Station.	Rainfall up to 8 A. M. on Saturday.										Price of food grains in seers per rupee and market fluctuations in prices of food grains.			
	This week.		Last ten years' average for the corresponding week.		Up to the end of the week from 1st January 1906									
					This year.		Average of past ten years.		Excess (+) or defect (−) of column 4 compared with column 5.					
1	2		3		4		5		6		7			
	I.	c.	I.	c.	I.	c.	I.	c.	I.	c.		This week	Past week	Past ten years' fortnightly average.
												Seers.	Seers	Seers.
MYSORE.														
Mysore ...	1	...	...	...	2	34	...	22	+2	12				
Chamrajnagar ...	...	...	..	30	...	..	...	72	−0	72				
Seringapatam ...	.	...	...	7	...	36	...	38	−0	2	Rice, 2nd sort.	8·25	8·25	10·34
Hunsur ...	...	..	...	4	...	9	...	42	−0	33				
Yedatore ...	...	..	...	7	...	65	.	31	+0	31	Ragi	15·00	14·00	22·43
Heggaddevankote ...	...	...	...	4	..	..	1	2	−1	2	Kulthi	13·00	13·7	...
Gundlupet ...	..	...	...	22	1	44	...	68	+0	76	Kadale	9·00	9·00	10·45
Nanjangud ...	...	...	...	5	...	79	..	40	+0	39				
T.-Narsipur ...	...	...	..	2	...	98	..	61	+0	37				
Malvalli ...	...	...	...	...	...	39	...	44	−0	5				
Mandya ...	...	...	...	...	1	90	..	25	+1	65				
Krishnarajpete ...	...	..	..	10	..	80	...	18	+0	62				
Nagamangala ...	...	..	...	5	1	38	..	18	+1	20				
District average...	...	..	...	7	..	85	...	45	+0	40				
HASSAN.														
Hassan ...	...	...	...	2	...	9	..	27	−0	18				
Manjarabad (Saklespur)	..	.	...	20	.	84	...	59	+0	25				
Arkalgud		...	..	3	...	95	...	42	+0	53				
Belur ...	...	...	..	5	1	26	...	38	+0	88	Rice, 2nd sort.	8·50	9·00	10·85
Channarayapatna ...	..	...	...	...	..	10	...	21	−0	11				
Arsikere ...	...	..	...	6	...	...	..	32	−0	32	Ragi	17·00	18·00	25·45
Hole-Narsipur ...	..	..	...	2	...	45	..	57	−0	12	Kulthi	12·00	12·50	...
Alur ...	...	...	...	1	..	5	...	31	−0	26	Kadale	9·00	8·50	9·85
District average...	...	...	...	5	...	47	..	39	+0	8				
SHIMOGA.														
Shimoga ...	...	..	...	7	...	94	...	20	+0	74				
Channagiri ...	...	..	..	7	...	20	...	22	−0	2	Rice, 2nd sort	8·00	8·50	12·39
Honnali ...	...	..	...	19	1	20	...	59	+0	61				
Shikarpur ...	...	..	...	3	...	...	...	3	−0	3	Ragi	16·00	15·75	30·21
Sorab ...	..	...	..	9	..	43	..	16	+0	27	Kulthi	11·00	12·00	...
Sagar ...	...	...	...	29	1	89	...	30	+1	59				
Nagar (Kallurkatte) ..	...	..	...	5	..	56	...	19	+0	37				
Tirthahalli ...	...	...	...	11	1	15	.	15	+1	...				
Kumsi ...	..	...	..	6	...	16	..	12	+0	4				
District average...	...	..	..	10	...	73	...	22	+0	51				
KADUR.														
Chikmagalur ...	..	...	...	...	1	55	..	55	+1	...				
Kadur ..	...	...	...	3	...	...	..	25	−0	25	Rice, 2nd sort	8·00	8·00	10·80
Tarikere ...	...	...	..	...	...	76	...	16	+0	60				
Koppa ...	...	...	..	13	2	69	...	50	+2	19	Ragi	15·00	15·00	23·50
Mudgere ...	...	...	...	12	...	65	.	44	+0	2	Kulthi	11·00	11·00	...
Yedahalli ...	...	...	..	3	...	40	...	22	+0	18	Kadale	8·00	8·00	10·40
Sringeri ..	..	...	...	23	1	3	...	32	+0	71				
District average ..	...	...	..	8	1	1	...	35	+0	66				
CHITALDRUG.														
Chitaldrug ..	...	..	...	..	1	22	...	9	+1	13				
Challakere ...	..	..		1	...	8	..	35	−0	27	Rice, 2nd sort	7·50	7·50	10·40
Hiriyur ...	...	.	...	..	...	11	..	13	−0	2				
Holalkere ...	..	..	.	...	...	20	...	23	−0	3	Ragi	16·00	16·00	26·60
Davangere ...	...	...	...	...	...	41	.	33	+0	8	Kulthi	14·00	14·00	...
Molakalmuru ...	...	...	...	...	...	24	...	4	+0	20	Cholum	15·00	15·00	24·00
Jagalur ...	...	..	...	2	...	27	...	49	−0	22	Kadale	9·00	9·00	11·10
Hosdurga ..	...	...	.	8	...	10	..	23	−0	13				
Harihar ..	...	...	..	11	2	94	...	19	+2	75				
District average...	..	...	...	2	...	62	...	23	+0	39				
Provincial average...	...	...	...	9	...	75	..	42	+0	33				

Note—Rice (husked)—Oryza Sativa.
Ragi—Eleusine Corocana.
Kulthi—(Horse gram) Dolichos Biflorus.
Cholum—Sorghum Vulgare
Kadale—(Bengal gram) Ciser Arietinum.

DISTRICT REPORTS.

8. Markets how supplied.

9. Progress of agricultural operations, state of standing crops, prospects and probable outturn of harvests, serious damage done to crops by insects or other natural calamities.

10. Prospects of season, tracts in which the rainfall has been insufficient, areas affected by scarcity, number of people under relief, and state of food stocks.

11. Public health.

12. Remarks as to the condition of agricultural stock, failure of pasturage, of fodder, etc.

BANGALORE CIVIL AND MILITARY STATION.

		Normal.	*Current.*	
Prices of food grains—	Rice ...	10 to 11	6½ to 7	seers per rupee.
	Ragi ..	25 to 30	16 to 17	

Agricultural operation—Ragi thrashing.

Outturn of ragi is from 5 to 6 annas.

Cattle are in good condition.

Water and fodder sufficient.

BANGALORE CITY AND TALUKS.

8. Market well supplied.

9. Standing crops are in good condition. Potato is being harvested in some parts. Sugar-cane in Bangalore, Dodballapur, Nelamangala and Closepet and ragi in Closepet are being harvested. Sugar-cane is being sown in Bangalore, Dodballapur and Nelamangala. The probable outturn is on an average 8 annas in the rupee.

10. Prospects of the season moderate. There is no visible change in the price of food stocks.

11. Public health generally good. Fever prevails in Hoskote.

12. Cattle generally healthy. Foot and mouth disease is reported to prevail in Hoskote. Fodder available. Water is supplid with difficulty from temporary wells dug in the bed of tanks.

KOLAR.

8. Market well supplied.

9. Sugar-cane is being sown in the Bowringpet, Mulbagal, Sidlaghatta, Chikballapur Bagepalli, Goribidnur and Gudibanda; and it is being milled in almost all the taluks Vysakhi paddy is being harvested in Kolar and Sidlaghatta and kadale in Chikballapur.

10. Prospects of the season depend upon early rains. Food stocks available.

11. Public health generally good.

12. Water and fodder are generally available, but the supply of water is running short. Pasture in fields and grazing lands is almost exhausted.

TUMKUR.

8. Market well supplied.

9. Paddy in Maddagiri and Pavagada, kadale in Maddagiri, Gubbi, Tiptur, Pavagada and Turuvekere; cholum in Maddagiri, Sira and Pavagada, cotton in Sira and Pavagada, sugar-cane in Gubbi, Kunigal and Koratagere; castor and wheat in Pavagada are being harvest-

ed. Paddy in Maddagiri and sugar-cane in Maddagiri and Koratagere are sown. Standing crops in all the taluks except Chiknayakanhalli are in moderate condition. Water is not sufficient for Vysakhi paddy in Chiknayakanhalli. The probable outturn of crops are as follows:—

Maddagiri—Paddy 8 annas, kadale 4 annas, cholum 6 annas.

Sira—Cholum 4 to 8 annas, cotton 2 to 4 annas.

Gubbi—Kadale 4 annas, sugar-cane 4 annas.

Pavagada—Paddy, cotton, castor and wheat 2 annas, kadale 8 annas, cholum 4 annas.

10. Prospects not encouraging. Food stocks are reported to be sufficient for the present. Supply of water in wells is diminishing in parts of Maddagiri, Chiknayakanhalli, Sira, Gubbi, Tiptur, Pavagada, Kunigal and Koratagere. *Mungar* rains are anxiously awaited all over the District.

11. Public health generally good, except that small pox is reported to be prevalent in parts of Gubbi, Tiptur and Turuvekere.

12. Cattle healthy, except that foot and mouth disease is prevalent in parts of Gubbi, Tiptur and Kunigal. In parts of Sira and Tiptur date leaves are used as fodder for cattle. In parts of Tumkur, Maddagiri and in other taluks, water is drawn from wells for cattle to drink.

MYSORE.

8. Market well supplied.

9. Standing sugar-cane, cotton and mulberry crops are good in Chamrajnagar and Nagamangala and fair in Malvalli and Krishnarajpete; cholum in parts of Mysore and sugar-cane in parts of Krishnarajpete have been sown. Lands in Seringapatam are being ploughed and made ready for sowing. The probable outturn of sugar-cane and mulberry crops in T.-Narsipur is 12 annas.

10. Prospects of the season moderately fair. Food stocks available. Rain is wanted throughout.

11. Public health good. Small-pox is reported to be prevailing in parts of Hunsur and Heggaddevankote.

12. Cattle healthy except in parts of Chamrajnagar where they are reported to be suffering from foot and mouth diseases. Fodder is generally available. Difficulty for water for men and cattle is increasing in parts of Chamrajnagar, Seringapatam, Yedatore, Heggaddevankote, Gundlupet, Mandya and Nagamangala.

HASSAN.

8. Market fairly well supplied. Prices high.

9. Sugar-cane in Hassan, Belur, Arsikere, Channarayapatna, Hole-Narsipur and Alur; and paddy in Hassan, Manjarabad and Arsikere are reported to be in a fair condition. The following is the estimated outturn of crops:—

Arsikere—Sugar-cane and paddy (if rain falls) 4 annas.

Hole-Narsipur—Sugar-cane 10 annas.

10. Prospects fair. Food stocks sufficient for the present.

11. Public health generally good. Small-pox is reported to be prevalent in several parts of the district.

12. Cattle generally healthy, but foot and mouth disease is reported to exist in parts of Manjarabad, Belur, Arsikere and Arkalgud. Fodder and water generally available except in parts of Arsikere and Channarayapatna, where some difficulty is felt.

SHIMOGA.

8. Market well supplied. Prices high.

9. Sugar-cane milling is finished in all taluks except in small areas of Shimoga, Sorab and Tirthahalli. Vaisakhi paddy is in a fair condition in Sagar and Nagar. Sugar-cane plants are fairly well in Sorab, Sagar and Nagar, but are withering in Shimoga for want of water. Castor is in a fair condition in Honnali and cotton is being harvested there.

10. No rains have yet fallen anywhere. Food stocks are reported to be sufficient for the present except in parts of Shikarpur, Sorab and Kumsi.

11. Public health good.

12. Cattle healthy. Fodder supply is running short in parts of Honnali, Shikarpur Sorab and Kumsi. Wells are being deepened in some parts of Shimoga. Water-supply is failing in Shimoga, Honnali, Shikarpur, Sagar, Sorab and Kumsi.

KADUR.

8. Market fairly supplied.

9. Sugar-cane is being planted in Tarikere and Kadur. The standing crops are in fairly good condition. Sugar-cane and cotton in Tarikere, pepper in Koppa, and kar paddy and sugar-cane in parts of Kadur are being harvested. The probable outturn of standing crops in Tarikere is 8 annas.

10. Prospects of the season fair. Food stocks available and sufficient for the present.

11. Public health good, except that small-pox prevails in parts of Chikmagalur.

12. Foot and mouth disease to cattle in the district is reported to be subsiding. Water and fodder generally available, but with difficulty in some places.

CHITALDRUG.

8. Market well supplied.

9. The estimated outturn of crops harvested during the week is as follows :—

Chitaldrug	Cotton	10 annas.
	Sugar-cane	8 ,,
	Wheat	5 ,,
Hiriyur	Ragi	8 ,,
	Do (under kapile wells)	8 to 10 annas.
	Paddy (do)	8 to 10 ,,
	Ballar, togari and navane	4 ,,
Holalkere	Cotton	6 ,,
Davangere	Sugar-cane, cotton and kadale ...	8 ,,
Molakalmuru	Wheat	4 to 8 ,,
Harihar	Cotton	4 to 8 ,,

10. Prospects of the season fair. Food stocks sufficient.

11. Public health good.

12. Cattle healthy. Water procurable. Fodder is procurable in limited quantities.

BANGALORE,

4th April 1906.

B. K. VENKATA VARADA IYENGAR,

Secy. to the Govt. of H. H. the Maharaja of Mysore, Gen. & Rev. Dept.

SUPPLEMENT TO

The Mysore Gazette.

Published by Authority.

BANGALORE, THURSDAY, APRIL 5, 1906.

REVENUE.

SALE OF SEPARATE ARRACK SHOPS FOR 1906-07.

Notification No. 2213, dated 21st March 1906.

1. Notice is hereby given that the exclusive right of selling arrack in each of the separate shops specified in the appended schedule for the twelve months beginning with 1st July 1906 and ending with 30th June 1907, will be put up to public auction at upset prices, by the respective Deputy Commissioners or by Revenue Assistant Commissioners or by Divisional Officers of the Excise Department or other Officers specially authorized by the Deputy Commissioners for the purpose, on the dates and at the Taluk Head-quarters or other places mentioned below, subject to the conditions hereinafter set forth. If the sales are not completed on abovenamed days, they will be continued on the next following days (close holidays excepted).

2. (*a*) Each bidder at the auction will deposit a sum of Rs. 60 for shops in the Kolar Gold Fields, Rs. 25 for those in the Mysore and Bangalore Cities and Rs. 10 for those in other places, or such other reasonable amount as may be fixed by the officer conducting the sale, previous to bidding. It will, if offered, be received at any time within three days prior to the date of sale, provided that the Government may, at any time, dispense with such initial deposit. The deposits made by unsuccessful bidders if not forfeited as hereinafter provided, will be returned at the close of the sale. The shops or group of shops will be knocked down to the approved highest bidder, subject to formal confirmation by the Deputy Commissioner, who will be at liberty to accept or reject any bid at his discretion without assigning reasons for the same. Such formal confirmation will, *unless revised by Government for special reasons*, be tantamount to an acceptance of the bid and will be necessary whether the sale be held by the Deputy Commissioner himself or by any other officer appointed by him. Parties intending to bid must attend either in person or by duly accredited agents. Should there be no bid above the upset price, for any shop singly, the officer conducting the sale may, in consultation with the Excise Divisional Officer, if present, club together more than one shop but not more than two in the District Head-quarter taluks and Kolar Gold Fields and six in other places or, if necessary, reserve shops for which there may be no bids, for disposal hereafter. He may, subject to formal confirmation of the Deputy Commissioner, sell the right in any particular case by means of tenders or by private negotiation. He may also lower the upset price at his discretion. The officer conducting the sale may at his discretion, and without assigning any reason, refuse to accept the bid of any person, on the ground that he has been

35

convicted by a criminal court of such an offence, or has been guilty of such breach of the conditions of the license, or of a contract under the Excise Regulation or Opium Act, as to render him undesirable as a holder of a license, or on the ground that he is insolvent, or in order to prevent arrangements to the detriment of Government interests, or for any other valid reason.

(*b*) No shop shall be knocked down in the name of more than one person or of more than one company or firm duly represented. The selling officer shall refuse to register as a purchaser any one in whose name the bidding has not proceeded.

3. (*a*) The successful bidder shall, on the exclusive privilege being knocked down to him, at once, if so required by the selling officer, or otherwise at the close of the day's sale, further deposit a sum equal to one-twenty-fourth part of his bid for the year, that is to say, one-half of the monthly rent unless the initial deposit equals or exceeds two months' rent. Should he fail to do so, the deposit, if any, made by him under clause 3 (*a*) will be forfeited, and the privilege will be sold again on the above conditions, or otherwise disposed of at his risk, as the Deputy Commissioner or selling officer may determine.

(*b*) The person to whom a shop or group of shops has been knocked down and who has made deposits as provided above, shall be required to leave his address with the selling officer, in order that the confirmation of the sale may be communicated to that address by a notice, and he shall, within seven days after the service of the said notice by its presentation to himself or to any adult male member of his family at the place of said address or by its being affixed thereto or by its forwardal duly registered by post, pay at the Taluk Treasury concerned, such further sum as, with the former deposits, will make up an aggregate sum equal to two months' rent, and execute at the same time before the Amildar the necessary engagements and take out the necessary licenses, as hereinafter set forth.

4. (*a*) The deposit made under the preceding para shall be either in cash or in Government of India Securities duly endorsed in favor of the Deputy Commissioner. Provided that in cases where the monthly rent exceeds Rs. 10 (in lieu of a deposit of two months' rent as above), the Deputy Commissioner may, in his discretion, allow any purchaser to deposit one month's rent as above, and to furnish approved personal security for an amount equal to four months' rent. In all cases where the monthly rent does not exceed Rs. 10, a cash deposit equal to two months' rent shall invariably be taken, and no personal security shall be accepted If, on enquiry subsequent to sale, the purchaser shall be found to be a foreigner having no property in the Mysore State, or to be of doubtful solvency, he may be required to deposit twice the prescribed sum or to get a surety or sureties, residents of and possessing property in the Mysore State, to execute a security bond for the due payment of *all moneys* that may become due by him under the terms of the contract.

(*b*) Should the initial deposit exceed the sum required to be deposited under clause 3 (*b*) or clause 4 (*a*), the excess will be refunded to the purchaser.

5. The purchaser shall execute an agreement in the prescribed form, binding himself and, unless exempted by the Deputy Commissioner by an order duly recorded, so much of his movable and immovable property as may be deemed sufficient by the Deputy Commissioner, to observe the conditions hereinafter set forth, as well as those specified in the license to be issued to him; and his surety or sureties, if any have been accepted, shall also execute a bond in the prescribed form binding himself or themselves and so much of his or their movable or immovable property as may be deemed sufficient by the Deputy Commissioner for the due fulfilment by the purchaser of the terms of the agreement. The agreement and the bond so executed shall be stamped at the expense of the purchaser. They shall also be registered at his expense when the amount secured is Rs. 100 and above.

6. If default is made in making the deposit or deposits or in executing the agreement or the security bond, if any, and in taking out licenses as aforesaid, the exclusive privilege shall be forthwith re-sold or otherwise disposed of by the Deputy Commissioner at the risk of the first purchaser, who shall forfeit to the Government any deposit or deposits already made by him, and shall further be liable to make good any loss caused by such re-sale or other disposal. He shall not be entitled to any gain accruing from the re-sale or other disposal, and he shall be debarred from bidding again for the same or for any other shop or group of shops. In the case of loss the

38

forfeited deposits will be deducted from it and the remainder, if any, shall be recovered as if it were an arrear of land revenue. In the case of the purchaser's death after the confirmation of the sale, it will be binding on his heirs or assigns.

7. Re-sales or other disposal effected under para 6 will be at the risk of the defaulting bidder, who shall forfeit all gain; and in the event of a loss caused by re-sale or other disposal he shall make good the deficiency between the total amount payable for the whole period under the terms of the original sale and the total amount payable by the successful bidder at the re-sale or other disposal. In the latter case, the forfeited deposit shall be deducted from the loss arising from the re-sale or other disposal, and the remainder, if any, shall be recovered from the defaulter in the same manner as if it were an arrear of land revenue. Should, however, the forfeited deposit be greater than the loss by re-sale, the whole of such deposit shall be credited to Government.

8. The amount of rental, the consumption of arrack in each shop, etc., for several years past are specified in the appended schedule.

9. The license to be taken out under para 3 (*b*) above, shall be subject to the following conditions but nothing herein contained shall exempt the purchaser of the privilege from liability to the penalties prescribed for breaches of the conditions set forth below though a formal license may not have been issued:—

(1) The amount for which the privilege has been purchased shall, if it exceeds Rs. 12 per annum, be payable into the local Taluk Treasury in equal monthly instalments commencing from July 1906. But where it does not exceed Rs. 12 per annum, it shall be paid in not more than three equal quarterly instalments. Each instalment shall be regarded as the rent for the month or quarter in respect of which it is payable. The licensee is not required to make any additional payment on account of local cess. Each month's or quarter's rent shall be payable on or before the 20th of the same month, or before the end of the quarter for which the instalment is due. If default is made, the Amildar may, with the sanction of the Deputy Commissioner, suspend, or declare by record in writing that the license is forfeited, and proceed to re-sell or otherwise dispose of the shop or group of shops as soon after the last day of the month or quarter as may be possible with effect from the date of issue of license to the new purchaser or from the date of other disposal. The officer who has power to suspend license may, however, at his discretion, allow sales to continue pending re-sale of other disposal of the privilege.

Note.—The licensee of a Jatra shop shall pay the rent thereof in full before the Jatra begins.

(2) The deposit made by the licensee shall be taken as security for the due performance of the conditions of the license and if not forfeited, credited or otherwise disposed of, shall be credited in payment of the instalments due in the last two months of the period of the lease. Provided, however, that where the shop or group of shops is re-sold or otherwise disposed of, the deposit shall, at the discretion of the Deputy Commissioner, be either forfeited or be appropriated towards the arrears due by the defaulter as well as towards the deficits, if any, arising from the re-sale or other disposal of the shop or group of shops. The balance of such arrears and deficits, if any, shall be recoverable from the licensee under the rules in force for the recovery of arrears of land revenue. No remission or abatement of the rent or compensation shall, on any account whatever, be claimable by the licensee.

(3) Interest at 6 per cent per annum shall be recoverable on all arrears from the date of default, and on deficits from the date of re-sale.

(4) The privilege conferred by the license extends only to the sale of arrack ordinarily of the strength of 20° under-proof and with the special permission of the Deputy Commissioner or other officer authorized by him to the sale of arrack of 30° U. P. In places where there are no shops for the vend of foreign liquors or where the foreign liquor shop-keepers do not undertake to sell double-distilled or rectified country spirits and

37

special liquors such as Brandy, Whisky, Gin, etc., of such strength as may be fixed by the Excise Commissioner, manufactured at the Government Central Distillery, Bangalore, the holder of arrack shop license of approved character may, with the sanction of the Excise Commissioner, be permitted to sell the same in duly corked sealed bottles not to be drunk on the premises, at such prices as may be fixed by the Excise Commissioner, and subject to conditions otherwise applicable to the sale of arrack.

(5) The lease shall not be transferable by sale, gift or otherwise or be sub-rented except with the permission of the Excise Commissioner, nor if the Deputy Commissioner so orders may any agent be appointed for the management of any privilege without his previous approval. All engagements entered into by the agent shall be deposited with the Deputy Commissioner within one month from the date of execution.

(6) Application for resignation of shop or group of shops will be summarily rejected by the Deputy Commissioner.

(7) The manufacturers of arrack or double-distilled or rectified country spirits or other special liquors as well as the licenses of arrack Bonded Depots are prohibited from holding any interest in the retail vend of the abovementioned spirits or from employing any person who has such interest.

(8) The sale or transport of arrack by persons suffering from leprosy or any contagious disease and the employment of such persons in the shop are prohibited.

(9) The license-holder shall purchase from the Bonded Depots established molasses arrack at 8½ annas per gallon of 20° under-proof, jaggory arrack in duly corked sealed bottles at Rs. 1-6-6, and also special liquors referred to above, at such prices as may be fixed by the manufacturers.

(10) The licensee shall sell molasses arrack to the public at Rs. 6-6-0 per gallon of 20° under-proof (*i. e.*, at annas two per dram which is equal to 1—51st part of a gallon) and jaggory arrack at Rs. 1-3-10 per reputed quart bottle and at proportionate rates for lower strengths.

(11) The licensee of every shop in the Cities of Bangalore and Mysore shall pay a registration fee under the Municipal Regulations at the rate of Rs. (180) one hundred and eighty per annum in advance for the period of the license for his shop, and he shall pay a surcharge of (4) four annas per gallon on all arrack sold by him in excess of 55 gallons a month in each such shop.

(12) The above rates to be charged for molasses arrack, jaggory arrack, double distilled or rectified country spirits or other special liquors by the manufacturers and the above fees are in addition to excise duty, which shall be prepaid at the prescribed rate of Rs. 4-12-0 (including local cess) per gallon of 20° U. P. and proportionately for higher or lower strengths, before the removal of the liquor from a Bonded Depot established under the sanction of Government.

(13) The licensee shall pay the above duty and price into a Taluk Treasury or to a special shroff, if any, appointed on this behalf at the cost of Government, and located at the Taluk Cutcherry to receive such duty and price *daily* including Sundays and holidays or to such other officer as may be appointed by the Deputy Commissioner, and shall obtain a receipt in the prescribed printed form. On production of such receipt and an indent for the supply of the liquor covered by the receipt, the Bonded Depot-keeper shall issue the quantity of liquor equal to the amount of duty and price shown in the said receipt which will be forwarded to the Excise Commissioner's office under the endorsement of the Bonded Depot-keeper aforesaid, as to the date and hour when the liquor was issued. The Depot-keeper aforesaid shall

issue a pass in the prescribed form for the transport of liquor from the Bonded Depot. He shall also issue sample bottles with the consignments in such manner as may be ordered by the Excise Commissioner.

(14) The licensee shall be bound to take over any liquor which may remain as stock in hand belonging to the out-going licensee on 1st July 1906, in the shop, paying him such compensation for the same as may be fixed by the Excise Commissioner.

(15) The licensee shall possess or use on any licensed premises only such standard measure as may, from time to time, be prescribed by the Excise Commissioner. The officers authorized to inspect licensed shops are empowered to enter and examine the premises, to test the measures in use and the liquor under sale and to call for and check the accounts kept in the shops.

(16) The licensee shall be bound by the provisions of the Excise Laws and rules in force and by any additional rules which may, from time to time, be prescribed under the Excise Laws, and if so required, deliver up his license for amendment or issue of a fresh one.

(17) The Deputy Commissioner may, whenever he thinks fit, direct shops to be closed, or permit transfer of shops from one place to another, provided the distance is not more than 200 yards, or direct new shops to be opened with the previous sanction of the Excise Commissioner.

(18) Persons who purchase group of shops may, with the special permission of the Excise Commissioner, who is at liberty to refuse it, and under a license by a competent authority open a depot and remove thereto liquor purchased from the Bonded Depot and issue therefrom the requisite supply to their shops.

(19) The licensee of shop or group of shops shall not, during the term of the license, have any interest in the exclusive privilege of vending toddy or foreign spirits or liquors or both within 5 miles from it, nor permit any person having interest in the exclusive privilege of vending toddy or foreign spirits or liquor or both within the said area, to hold any share or interest in his exclusive privilege of selling country liquor; nor shall he, during the term of his license, without the written permission of the Excise Commissioner, have any interest, direct or indirect, in any arrack farm in any districts of the Madras or Bombay Presidency under the British Government or any other Foreign State or Territory, or Civil and Military Station, Bangalore.

(20) An Inspection note book with the pages numbered consecutively for inspecting officers to enter their remarks shall be maintained and be handed over to the Excise Inspector in charge of the Range or any officer authorized by him to receive it on a receipt being given therefor.

(21) If the licensee shall be convicted on prosecution before a Magistrate of any offence against the Excise Regulation, or Opium Act or other law for the time being in force, which in the Deputy Commissioner's opinion renders him unfit to hold the license, it shall be lawful for the Deputy Commissioner to declare his license forfeited and sell or otherwise dispose of the privilege at the risk of the licensee.

(22) All sums payable by the licensee may be deducted from the amount of his deposit or recovered by attachment and sale of the property of the licensee or his surety, under any law for the time being in force for the recovery of arrears of land revenue.

(23) The license-holder or vendor or vendors shall not sell nor give any arrack exceeding one reputed quart to any individual to convey out of any licensed shop or premises without a valid permit.

(24) The shop-keepers shall not sell or give any arrack to any European non-commissioned officer, private or soldier, or to any European or

Eurasian camp follower, or to any member of the families of any of the aforesaid persons, without the permission in writing of the Commanding Officer or of some person duly authorized by him in that behalf; nor to any European sailor, nor to any sepoy, member of the Police force or Excise staff or servant of a Railway Company, whilst on duty; nor to any European vagrant under escort of Police; nor to any child under fourteen years of age; nor to any insane person for consumption on the premises; nor shall they sell any arrack on credit.

(25) They (license-holder or vendor or vendors) shall not receive any articles whatsoever in barter or pledge. Payment for arrack shall be received by them in ready money only, and they shall be bound to give intimation of the offer of anything other than cash to the nearest Magistrate or Police Officer. They shall have no pecuniary dealings with any Excise Officer.

(26) The arrack kept in his shop, offered for sale and sold, shall be unadulterated and undiluted; and it shall be of the same quality and strength as issued from the Bonded Depot. With all consignments from the Depot to the shop, sample bottles shall be taken in such manner as may be ordered by the Excise Commissioner.

(27) No consignments of arrack received at the shop, and which have been transported through British Territory, shall be opened before they have been verified by the officers authorized to do so.

(28) No water or other beverage, or liquor other than arrack of any quantity whatever shall be kept or sold in the shop in which arrack is sold, or on the person or in possession of the license-holder or vendor or any of his employees in the shop. No ingredients noxious to health shall be added to it either to increase its intoxicating power or for any other purpose. All officers authorized to inspect shops and depots are empowered to detain any liquor found unfit for consumption or use and the Excise Commissioner, all Deputy Commissioners, Deputy Excise Commissioner and Excise Assistant Commissioners are authorized to destroy such liquor.

(29) No robbers or thieves or disorderly or riotous persons or prostitutes or soldiers or others known or believed to be deserters shall be harboured in the shop, and gaming, disorderly conduct, etc., therein shall be prevented, and information of their resort shall be given to the nearest Magistrate or Police Officer. No person shall be harboured during night in any shop.

(30) The license-holder shall fix in a conspicuous place outside of his shop a board on which shall be legibly printed in local vernacular his name and the number of his license and the articles he is licensed to deal in and the current rate of sale; the license must be hung up in a conspicuous place within.

(31) True account of receipts and issues of liquor shall be maintained from day to day in ink in the prescribed form. The accounts and permits shall be in printed books which may be obtained form local Excise Officers on payment of cost price. Permits for liquor received and the counterfoils of permits issued must be carefully filed. The signing of blank permits for subsequent issue is prohibited. The accounts and counterfoils of permits shall be preserved and delivered to the local Excise Officer immediately after the close of the lease. They shall be produced when asked for by the Deputy Commissioner or any officer appointed by him or by an Excise Officer not below the rank of Excise Assistant Inspector. The licensee shall be bound to furnish such returns and information as may, from time to time, be required by the Deputy Commissioner or Excise Officer not below the rank of Excise Assistant Inspector.

(32) The amount of fees payable for the shops under Condition 11 above, shall, in the Towns of Bangalore and Mysore, be paid to the Officers appointed by the President, Municipal Commission, to receive the same.

(33) The following stock or such stock as the Excise Divisional Officer may consider sufficient to meet local requirements shall always remain on hand and not be trenched upon :—

	Arrack	Remarks
I At all District Head-quarters	2 Gallons	
II At all Taluk and Depot Kasabas...	1 Gallon	
III Village shops within five miles from Depot	½ Gallon	
IV Village shops more than five miles distant from Depot ..	Stock equal to one day's sale for every ten miles from Depot and not less than the stock fixed for shops within five miles of the Depot.	

The shop shall be kept open during the authorized hours unless its temporary or permanent closure is authorized by the Deputy Commissioner.

(34) The shop shall be closed by *9 P.M., and not be opened before sunrise except on special permit in cases of festivals, etc. The Deputy Commissioner or Assistant Commissioner in charge of the taluk may direct that all shops for the sale of arrack on or adjacent to the line of march shall be closed whilst a detachment of European or Native soldiers is passing or encamped in the vicinity. The Government reserves the power to terminate the lease on public grounds on giving the licensee fifteen days' notice and awarding a reasonable compensation to the licensee. The licensee will have no claim to compensation or remission on account of any arrangements which may be made by Government in regard to Country Beer or other description of liquor than arrack.

(35) The sales should be conducted in a suitable building which shall have only one door, and no windows shall be allowed to the rear or ends of the building. The bar where the liquor is sold shall be opposite the entrance door and so situated that all persons inside can be seen by any one passing to and fro in the street, and no second room shall be allowed to or be kept open for customers.

(36) The right is reserved to the Deputy Commissioner to grant occasional licenses for the sale of liquor on the occurrence of fairs, festivals, etc., in places in the vicinity of which there are no regularly licensed shops. Such licenses shall ordinarily be granted to the shopkeepers who usually supply the locality. Their period shall not exceed fifteen days and the fee to be paid therefor shall be fixed at the Deputy Commissioner's discretion unless he decides to sell the same by public auction.

(37) If it comes to the licensee's knowledge that any person employed by him in the carriage or sale of arrack, commits any breach of the Excise Laws or of the engagements entered into by him, it shall be his duty to report the matter to the Deputy Commissioner, and comply with the directions of the Deputy Commissioner respecting the continued employment of such person.

(38) No person who has been convicted of a heinous offence under the Indian Penal Code shall be employed in the carriage or sale of liquor without the Deputy Commissioner's previous permission.

* 9·30 P.M. in the City of Bangalore.

41

(39) In case of any breach of the above conditions either by the licensee or, with his connivance and privity, by any person in his employment, or in the event of the licensee neglecting to open his shop, or to carry on the business of his shop with due care and attention, it shall be competent to the Deputy Commissioner to impose upon the licensee a fine not exceeding Rs. 50 for every such breach or for such neglect, or, at the option of the Deputy Commissioner, to declare the money deposited with him forfeited, and to cancel the license and re-sell the shop or to otherwise dispose of it at the risk of the licensee, or to place the shop under the management of Government; and all loss thereby caused, together with all losses accruing to Government in consequence of the licensee's neglect to carry on his business with due care and attention and to open his shop on 1st July 1906, shall be made good by him. When a license is cancelled, the rent for the whole period of the shop shall become due at once. All such amounts of penalties and losses shall be recovered in the same manner as if they were arrears of land revenue.

(40) The imposition of a fine or the forfeiture of deposit or the cancellation of the license under the last preceding para, shall not be held to prevent the prosecution of the licensee or his agents or employees for any offence punishable under the Excise Laws or other law for the time being in force.

NOTE.—For continuing breaches of a license, continuing fines may be imposed.

DATES OF SALE.

District	Taluk	Date
		May 1906
Bangalore.	Bangalore City	1
	Bangalore Taluk	2
	Anekal	4
	Hoskote	8
	Devanhalli	10
	Dodballapur	12
	Nelamangala	14
	Magadi	16
	Channapatna	19
	Kankanhalli	21
		May 1906
Kolar.	Goribidnur	3
	Bagepalli	7
	Chikballapur	9
	Sidlaghatta	11
	Chintamani	15
	Srinivaspur	17
	Mulbagal	19
	Kolar	21
	Malur	23
	*Kolar Gold Fields	25
	Bowringpet	26

District	Taluk	Date
		May 1906
Tumkur.	Kunigal	8
	Tumkur	10
	Gubbi	12
	Tiptur	16
	Chiknayakanhalli	19
	Sira	23
	Maddagiri	25
	Pavagada	28
		April 1906
Mysore.	Yedatore	24
	Hunsur	26
	Heggaddevankote	28
	Nanjangud	30
		May
	Gundlupet	2
	Chamrajnagar	4
	Yelandur	7
	T.-Narsipur	9
	Malvalli	11
	Mandya	14
	Seringapatam	16
	Krishnarajpete	18
	Nagamangala	21
	Mysore City and Taluk	23

* Gold Fields Magistrate's Court.

42

Dates of Sale—*concld.*

District	Taluk	Date
		May 1906
Hassan.	Belur	1
	Manjarabad	3
	Arkalgud	7
	Hole-Narsipur	9
	Hassan	11
	Channarayapatna	14
	Arsikere	17
		May 1906
Kadur.	Kadur	19
	Tarikere	21
	†Yedahalli	23
	Koppa	25
	Mudgere	28
	Chikmagalur	31

District	Taluk	Date
		May 1906
Shimoga.	Shimoga	4
	Tirthahalli	8
	Nagar	10
	Sagar	12
	Sorab	14
	Shikarpur	16
	Honnali	18
	Chaunagiri	21
		May 1906
Chitaldrug.	Hosdurga	8
	Holalkere	10
	Davangere	12
	Jagalur	15
	Molakalmuru	17
	Challakere	19
	Hiriyur	22
	Chitaldrug	25

† Deputy Amildar's Office.

P. N. PURNAIYA,
Excise Commissioner in Mysore.

CALENDAR FOR APRIL 1906.

Kanarese year—
Parabhava.

ಚಾಂದ್ರಮಾನ ವರುಷ—
ಪರಾಭವ.

1906ನೆ ಇಸವಿ ಏಪ್ರೆಲ್ ಮಾಹೆ ಪಂಚಾಂಗ.

Date of the Month. ತಾರೀಖು.	Days of the Week. ವಾರಗಳ ಹೆಸರು.		Kanarese. ಚಾಂದ್ರಮಾನ.			Tamil. ಸೌರಮಾನ.		Stars. ನಕ್ಷತ್ರ.		The Sun. ಸೂರ್ಯ.		The Moon. ಚಂದ್ರ.	
	English. ಇಂಗ್ಲಿಷ್.	Kanarese. ಕನ್ನಡ.	Month. ಮಾಸ.	Date. ತಿಥಿ.	Time. ಕಾಲ.	Month. ಮಾಸ.	Date. ತೇದಿ.	Name. ಹೆಸರು.	Time. ಕಾಲ.	Rises. ಉದಯ.	Sets. ಅಸ್ತ.	Rises. ಉದಯ.	Sets. ಅಸ್ತ.
1	2	3	4	5	6	7	8	9	10	11	12	13	14
					ಘಳಿಗೆ. ವಿಘಳಿಗೆ.				ಘಳಿಗೆ.ವಿಘಳಿಗೆ	ಘಂ. ನಿಮಿಷ.	ಘಂ. ನಿಮಿಷ.	ಘಂ. ನಿಮಿಷ. ಹಗಲು.	ಘಂ. ನಿಮಿಷ. ರಾತ್ರಿ.
1	Sunday ..	ಭಾನುವಾರ ..	Chaitra Suddha. ಚೈತ್ರ ಶುದ್ಧ.	7	25—31	Pangunì. ಪಂಗುನಿ.	19	ಆರಿದ್ರಾ	60 — 0	5—58	6—10	11 —10	ಪ್ರಾತಃ
2	Monday ...	ಸೋಮವಾರ		8	28— 7		20	ಪುನರ್ವಸು	2— 3	5—57	6—10	12 — 10	0—10
G. 3	Tuesday ...	ಮಂಗಳವಾರ ...		9	29—38		21	ಪುಷ್ಯಮಿ	5—40	5—57	6—10	12 — 52	0—59
4	Wednesday .	ಬುಧವಾರ ..		10	29—50		22	ಆಶ್ಲೇಷ	7—56	5—56	6—10	1—47	1—49
5	Thursday ...	ಗುರುವಾರ ...		11	28—50		23	ಮಖ	8—53	5—56	6—10	2—40	2 - 39
6	Friday ...	ಶುಕ್ರವಾರ ...		12	26 — 34		24	ಪುಬ್ಬ	8—45	5—55	6—11	3 — 36	3 — 26
7	Saturday ...	ಶನಿವಾರ ...		13	23—11		25	ಉತ್ತರ	7—31	5—54	6—11	4 — 34	4—15
8	Sunday ...	ಭಾನುವಾರ ...		14	19— 5		26	ಹಸ್ತ	5—27	5—54	6—11	5 — 33	5— 4
9	Monday ☾ ..	ಸೋಮವಾರ ○ ..		15	14— 9		27	ಸ್ವಾತಿ	2 — 21	5 — 53	6—11	6 — 32	5—54
10	Tuesday ...	ಮಂಗಳವಾರ ..	Bahula. ಬಹುಳ.	1	8 — 30		28	ವಿಶಾಖ	54—44	5 — 52	6—11	6—33	6—44
11	Wednesday ...	ಬುಧವಾರ ...		2	2—46		29	ಅನೂರಾಧ	50—37	5 — 51	6 — 11	8 — 35	7—35
C. 12	Thursday ..	ಗುರುವಾರ ..		4	50 — 42		30	ಜೇಷ್ಠ	46—31	5 — 50	6—11	9—36	8—29
G. 13	Friday ...	ಶುಕ್ರವಾರ ..		5	44—57		1	ಮೂಲ	42—41	5—49	6—11	10 — 37	9—25
14	Saturday ..	ಶನಿವಾರ ..		6	39—42		2	ಪೂರ್ವಾಷಾಢ	39 — 0	5 — 49	6 — 11	11 — 36	10 — 22
15	Sunday ..	ಭಾನುವಾರ ..		7	34—59		3	ಉತ್ತರಾಷಾಢ	36 — 24	5—48	6—11	ಪ್ರಾತಃ	11—20
16	Monday ...	ಸೋಮವಾರ ...		8	31 — 5		4	ಶ್ರವಣ	34—50	5—48	6—12	0—31	12—17
17	Tuesday ...	ಮಂಗಳವಾರ ...		9	28 — 10		5	[illegible]	33—18	5—47	6—12	1—22	1 — 13
										[illegible]	[illegible]	2 — 9	2 — 6

	23	Monday ...	ಸೋಮವಾರ ...		30	35—20	Chitra ಚಿತ್ರಾ.	11	[illegible]	[illegible]	5—41	6—12	5—33	6—6
	24	Tuesday ..	ಮಂಗಳವಾರ ...	Vaisakha Suddha. ವೈಶಾಖ ಶುದ್ಧ.	1	40—9		12	ಭರಣಿ	57—25	5—43	6—12	6—13	6—53
	25	Wednesday ..	ಬುಧವಾರ ...		2	45—11		13	ಕೃತ್ತಿಕ	60—0	5—43	6—12	6—53	7—40
	26	Thursday ..	ಗುರುವಾರ ...		3	50—18		14	ಕೃತ್ತಿಕ	4—0	5—42	6—13	7—35	8—28
	27	Friday ..	ಶುಕ್ರವಾರ		4	54—51		15	ರೋಹಿಣಿ	10—24	5—42	6—13	8—21	9—18
	28	Saturday ..	ಶನಿವಾರ ..		5	58—35		16	ಮೃಗಶಿರ	16—9	5—41	6—13	9—5	10—5
H.	29	Sunday ...	ಭಾನುವಾರ ...		6	60—0		17	ಆರಿದ್ರಾ	21—1	5—41	6—13	9—54	10—54
	30	Monday ...	ಸೋಮವಾರ		6	1—36		18	ಪುನರ್ವಸು	24—46	5—41	6—13	10—54	11—43

Full Moon. ○
ಹುಣ್ಣಿಮಿ.

New Moon. ●
ಅಮಾವಾಸ್ಯೆ.

ರಾಹುಕಾಲ.

ಭಾನುವಾರ	ಸಾಯಂಕಾಲ	$4\frac{1}{2}$	ಘಂಟೆ ಯಿಂದ	6 ಘಂಟೆ ವರಿಗೆ.
ಸೋಮವಾರ	ಬೆಳಿಗ್ಯೆ	$7\frac{1}{2}$		9 ,,
ಮಂಗಳವಾರ	ಸಾಯಂಕಾಲ	3		$4\frac{1}{2}$,,
ಬುಧವಾರ	ಬೆಳಿಗ್ಯೆ	12		$1\frac{1}{2}$,,
ಗುರುವಾರ	ಸಾಯಂಕಾಲ	$1\frac{1}{2}$		3 ,,
ಶುಕ್ರವಾರ	ಬೆಳಿಗ್ಯೆ	$10\frac{1}{2}$		12 ,,
ಶನಿವಾರ	,,	9		$10\frac{1}{2}$,,

ಗುಳಿಕ ಕಾಲ.

ಭಾನುವಾರ	ಸಾಯಂಕಾಲ	3	ಘಂಟೆ ಯಿಂದ	$4\frac{1}{2}$ ಘಂಟೆ ವರಿಗೆ.
ಸೋಮವಾರ	,,	$1\frac{1}{2}$	,,	3 ,,
ಮಂಗಳವಾರ	,,	12	,,	$1\frac{1}{2}$,,
ಬುಧವಾರ	ಬೆಳಿಗ್ಗೆ	$10\frac{1}{2}$	,,	12 ,,
ಗುರುವಾರ	,,	9	,,	$10\frac{1}{2}$,,
ಶುಕ್ರವಾರ	,,	$7\frac{1}{2}$	,,	9 ,,
ಶನಿವಾರ	,,	6	,,	$7\frac{1}{2}$,,

GOVERNMENT HOLIDAYS.—ಸರ್ಕಾರದ ರಜಾ ದಿವಸಗಳು.

G.	3rd Sriramanavami.	ಶ್ರೀರಾಮನವಮಿ.
C.	12th to 17th Easter Holidays.	ಈಸ್ಟರ್ ರಜಾದಿವಸಗಳು.
G.	13th Good Friday.	ಗುಡ್ ಫ್ರೈಡೆ.
M.	18th Akhir Sharshamba.	ಆಖೈರ್ ಚಾರ್ಷುಂಭ.
H.	29th Ramanujacharya's Tirunakshatra.	ರಾಮಾನುಜಾ ಚಾರ್ಯರ ತಿರುನಕ್ಷತ್ರ.

MYSORE GAZETTE OFFICE,
BANGALORE.

— C. H. YATES,
Compiler, Mysore Gazette.

Govt. Press, Bangalore—1906.

44

45

ARRACK SCHEDULE

FOR 1906-07

ARRACK SCHEDULE FOR THE YEAR 1906-07.

Taluk	Hobli	Name of Depot from which the shops are supplied	Serial No. of shops in each village or town	Name of village or town in which the shop is situated	Cosumption in each shop					Rental of each shop or group of shops					Amount of gross profit allowed for retail vend per gallon of Arrack	Remarks
					1901—02	1902—03	1903—04	1904—05	1905—06 for 5 months	1901—02	1902—03	1903—04	1904—05	1905—06		
1	2	3	4	5	6	7	8		10	11	12	13	14	15	16	17
					Gals.	Gals.	Gals.	Gals.	Gals.	Rs.	Rs.	Rs.	Rs.	Rs.	Rs. a. p.	
Bangalore	Bangalore City.	Bangalore ...	1	No. 168-1 Mariyammanagudi street ...	971	2094	2116	2008	904	1360	725	1020	1044	1044	1—1—6 Moeasses arrack. 1—4—6 Jaggery arrack.	
			2	No. 44 Rangasami street.	2519	2097	2783	3183	1424	1200	1010	840	984	1200		
			3	No 57 Basettipete ...	1911	1961	2420	2448	1138	1325	1220	1140	1152	1152		
			4	No. 618 Alsur gate ...	2042	2166	2987	2547	1232	2020	1820	1704	1920	2064		
			5	No. 447 Avenue road .	1351	1700	2028	2014	906	1010	1075	876	984	1272		
			6	No. 45 Taramandal street.	1536	2140	2022	2480	975	1700	1290	1200	1536	1620		
			7	No. 26 Ramannapet ...	1550	1324	1856	1467	555	890	1000	852	936	1176		
			8	No. 112 Lascar Lines ...	1575	1611	1503	1867	1483	870	840	912	960	1200		
			9	No. 9 Market road ...	2449	2464	5211	5025	1848	2215	2200	2064	2100	2124		
			10	No. 65 Koravinpet ...	1880	2289	2623	2402	940	1120	1305	1308	1452	1632		
			11	No. 55 Gudumiyanapet...	1533	1664	1916	1731	718	825	961	852	864	984		
			12	128 Akkipet ...	3032	3105	2843	4325	1530	2190	2365	2052	2184	2772		
			13	Kubbonpet road ...	1386	981	1371	989	512	760	800	540	780	900		
			14	Kumbarpet ...	1674	2023	2042	1882	848	730	700	700	1092	1200		
			15	Akkipet ...	2068	1889	2468	2262	1017	1515	1200	1200	1488	1704		
			16	No. 136 Lascar Lines ...	1551	1889	2206	1779	757	1210	1200	1200	1272	1452		
			17	Jamkanpet .	2253	2758	3572	3236	1398	1420	1560	1560	1992	2280		
			18	Market road ...	3906	3442	3388	3100	1110	1955	2500	2172	2040	2040		
			19	Ragipet ...	2253	2729	2807	1945	1047	1260	285	1644	1932	1824		
			20	Bambu Bazzar street ...	1890	1016	1260	1892	758	1500	1100	900	984	1104		
			21	Balepet ...	1982	1662	2006	2003	818	1060	1070	888	840	1056		
			22	Madigarpalya (Mysore road) ...	793	795	849	952	383	520	370	360	324	540		
			23	Tattinabagal ...	1464	1510	2225	2011	683	870	875	1212	1392	1320		
			24	Lascar Lines high road...	926	2686	1660	1505	648	589	600	660	1032	888		

		25	Nalabandvadipet ...	1893	2056	2020	2213	1041	1230	1055	1056	1440	1572				
		26	Dobspet A street ...	1905	1594	1463	1448	522	1515	1305	1440	1512	1380				
		27	Old Sowar lines, Malavalli Giriyappa's Chattratm on the Tumkur road ...	1234	878	1294	1179	525	700	685	840	612	984				
		28	Muniraddipalya ...	983	1035	900	999	476	455	571	732	612	612				
		29	Jaksandra (Malleswara extention) ...	334	485	537	769	347	200	191	384	396	432				Within the Municipal limits
		30	Madigarpalya (Magadi road) ...	1049	924	1103	1136	462	510	675	600	564	660				Out of the Municipal limits.
Kengeri ...	Kengeri ...	1	Kengeri ...	296	272	355	203	127					168				
		2	Talaghatpura ..	152	148	125	113-47	96					60				
		3	Hullalbasti ...	22	98	113	130	48					72				
		4	Ramohalli ...	83	100	81	72	36	600	580	540	12	36				
		5	Kumblagud ...	..	51	64	58	26					4				
	Kengeri and Madivala Kengeri.	6	Yelachenhalli ...	272	312	334	424	178					3.6				
		7	Pantarpalya ...	33	50	77	40	18	36	18	12	18	12				
Begur ...	Madivala ...	1	Begur ...	188	441	270	233	110					180				
		2	Do ...	205	30	85	170	108					120				
		3	Balakpalli ...	326	336	332	453-12	156					264				
		4	Gottigere ...	97	46	192	275	105					192				
		5	Bettadasanpura ...	121	67	93	71	16	780	680	720	900	36	1—1—6 Moeasses arrack.	1—4—6 Jaggory arrack.		
		6	Venkatasubba Iyahan-palya ..	208	248	234	247	75					120				
		7	Gollahalli ...	23	82	22	...	24					36				
Bangalore Kasaba.	Bangalore City Depot	1	Karanjibisanhalli ...	195	473	436	526	167	...	160	360	336	408				Within the Municipal limits.
	Devarjeebanhalli Farm Depot.	2	Devarjeebanhalli ...	587	630	1040	1168	479					948				
		3	Sultanpalya ...	511	410	731	637	156					504				
		4	Gedlahalli ...	31	44	.	9	...					..				Not sold
	Madivala ...	5	Egipura ..	562	526	41	536	206	5760	1560	1260	1560	324				
	Devarjeebanhalli Farm Depot.	6	Mirsabikunte ...	221	48	123	...	...					..				Not sold
		7	Byappanhalli ..	100	73	112	9	26					60				
Yesavantapura...	Devarjeebanhalli Farm Depot.	1	Yesvantapura ...	155	309	253	686	111					228				
		2	Nagavara ...	373	416	417	267	122					312				
		3	Kavalbirasandra ..	528	682	689	686	279					600				
		4	Hebbala ...	229	173	219	214	74					1-0				
		5	Bendiganahalli ...	221	255	360	285	145	..	1536	1560	2136	264				
		6	Tippasandra ...	254	73	82	168	94					84				
		7	Kacugondahalli ..	457	683	743	751	378					600				
		8	Kariyannanapalya ...	320	235	160	116	68					72				

47

Arrack Schedule for the year 1906-07.

Taluk	Hobli	Name of Depot from which the shops are supplied	Serial No. of shops in each village or town	Name of village or town in which the shop is situated	Consumption in each shop					Rental of each shop or group of shops					Amount of gross profit allowed for retail vend per gallon of arrack	Remarks
					1901—02	1902—03	1903—04	1904—05	1905—06 for 5 months	1901—02	1902—03	1903—04	1904—05	1905—06		
1	2	3	4	5	6	7	8	9	10	11	12	13	14	15	16	17
					Gals.	Gals.	Gals.	Gals.	Gals.	Rs.	Rs.	Rs.	Rs.	Rs.		
Bangalore	Agara ...	Madivala ...	1	Madivala .	996	975	844	859-18	257					1056	Rs. 1—1—6 Mysasses arrack Rs. 1—4—6 Jaggery arrack	Within the Municipal limits.
			2	Jakkasandra ...	88	221	344	332	106					360		
			3	Yadiyuru ...	409	322	384	359	158					336		
			4	Bommanhalli ...	95	108	89	126	68	2700	1820	1944	2412	96		
			5	Vaddarpalya ..	470	422	43	452	158					324		
			6	Kodihalli ...	402	393	68	786	344					252		
			7	Belur ...	257	259	34	440	176					168		
		Bangalore City ...	8	Gavipura ...	161	158	454	258	94	168	30	144	198	144		
	Yelahanka ..	Yelahanka ...	1	Yelahanka ...	480	616	745	620-31	288					720		
			2	Do ...	240	314	677	566	224					492		
			3	Ramagondahalli ...	210	199	79	63	18	1320	1216	1308	1236	60		
			4	Bamasara ..	220	217	179	204	76					96		
			5	Byatarayanpura ...	157	150	130	149	65					60		
	Krishnarajapura	Krishnarajapura ..	1	Krishnarajapura ...	329	364	126	359	142					372		
			2	Do ...	433	389	563	542	218	840	900	756	840	432		
			3	Horamavoo ..	144	67	98	94	44					72		
			4	Narayanapura ...	342	297	228	207	110					72		
	Varthoor ..	Kadugodi ...	1	Varthoor No. 1 ...	156	256	314	342	146					156		
			2	Do No. 2 ...	329	343	214	230	89					144		
			3	Gunjoor No. 1 ...	95	129	126	109	43					60		
			4	Do No. 2 ...	91	100	102	87	35					48		
		Krishnarajapura ...	5	Kannelli ...	76	132	138	132	56	840	770	852	852	84		
			6	Kaikondahalli ...	97	230	142	146	44					72		

		Kadugodi ...	7	Immadihalli ...	184	212	497	318	134					216			
			8	Nagondahalli ...	69	39	189	208-41	90					132			
		Krishnarajapura ..	9	Dodda Nekkundi ...	203	237	157	198	78					210			
	Hoskote ..	Hoskote ..	1	Hoskote No. 1 ...	871	766	936	1000	382					948			
			2	Do No. II ...	631	541	646	753	239					840			
			3	Do No. III ...	399	590	618	411	151					672			
			4	Hasigala ...	123	82	88	96	44					48			
	Soolibele ...		5	Soolibele .	226	244	236	298	122		2460	2400	2880	216			
			6	Begoor ...	88	88	101	96	52					60			
			7	Bendiganahalli ...	108	110	142	134	52					72			
			8	Anupahalli ...	124	145	196	138	68					108			
			9	Ittasandra ...	100	101	161	143	56					108			
			10	Hullur ...	178	164	157	195	98					132			
	Hulloor ...		11	Attoor ...	208	170	190	177	72		396	360	456	144			
	Nandigudi ...	Nandigudi ..	12	Thavarekere ...	78	150	166	144	74					72			
			13	Mummainhosahalli ...	96	92	146	136	54					72			
			14	Nandigudi ...	130	161	162	222	81					180			
			15	Hindiganal No. I ...	231	212	328	280	138					360			
			16	Do No. II ...	262	315	328	282	164		792	1080	1404	372			
			17	Chikondahalli ...	136	206	237	215	86					180			
			18	Sivanpura ...	233	206	257	53	110					204			
			19	Dodganahalli ...	96	112	145	37	58					108			
	Kadgodi ...	Kadgodi ...	20	Kadgodi No. I ...	387	252	355	596	212					288			
			21	Do No. II ...	308	212	153	74	82					276			
			22	Samethanhalli .	182	136	119	114	62					72			
			23	Kunnamangala ..	146	110	85	54	66					60			
			24	Byrathi ...	121	222	145	180	94					60			
			25	Medahalli ..	124	118	152	167	64		1932	1800	1572	192			
			26	Kithiganur ...	254	178	149	208	106					168			
			28	Vagata ...	10	...	...		24					36			
			27	Nadavathi ...	142	164	155	170	64					84			
			29	Vanachenahalli ...	151	156	104	119	62					48			
			30	Ganigaloor ...	214	131	186	88	30					48			
	Mugalur ...		31	Arahalli ...	129	143	148	143	48					60			
			32	Koogoor ...	184	196	124	142	62		516	552	480	120			
			33	Bellikere ...	166	209	154	166	80					96			
			34	Devangundi ...	172	167	210	167	86					120			

Hoskote

Rs. 6900—0—0 whole of Hoskote Taluk.

Rs. 1—1—6 Molasses arrack

Rs. 1—4—6 Jaggory arrack.

Arrack Schedule for the year 1906-07—contd.

Taluk	Hobli	Name of Depot from which the shops are supplied	Serial No. of Shops in each village or town	Name of village or town in which the shop is situated	Consumption of each shop					Rental of each shop or group of shops					Amount of gross profit allowed for retail vend per gallon of Arrak	Remarks
					1901—02	1902—03	1903—04	1904—05	1905—06 for 5 months	1901—02	1902—03	1903—04	1904—05	1905—06		
1	2	3	4	5	6	7	8	9	10	11	12	13	14	15	16	17
					Gls	Gls	Gls	Gls	Gls	Rs	Rs	Rs	Rs	Rs	Rs a p	
Dodballapur	Dodballapur ...	Dodballapur Bonded Depot.	1	Dodballapur No. I ...	202	248	458	482	178					246		
			2	Do „ II ...	254	249	282	224	99					240		
			3	Do „ III ...	264	243	196	190	75					252		
			4	Do „ IV ...	262	240	237	184	32					288		
	Kodihalli ...		5	Kadanur ...	110	78	512	86	36					63		
			6	Madure ...	52	48	98	34	24					36		
	Kakolu ..		7	Kakolu ...	122	138	236	116	58	1320	1320	1320	1440	60		
			8	Byatha ...	46	63	90	66	38					96		
			9	Seekote ...	72	63	70	66	32					57		
	Rajaghatta ...		10	Melekote ...	149	120	105	110	42					78		
			11	Thubagere ...	104	74	58	72	28					39		
	Hulkunte ...		12	Dodbelavangala ...	50	48	46	58	52					27		
	Hosahalli ...		13	Gundangere ...	38	24	34	32	16					6		
Nelamangala	Nelamangala ...	Nelamangala ..	1	Nelamangala No. I ...	320	446	370	344	159					264	Molasses arrack. 1—1—6 Jaggery arrack. 1—4—6	
			2	Do „ II ...	360	391	316	259	118					180		
			3	Arkavati ...	102	114	92	89	51					96		
	Sondekuppa ...		4	Sondekuppa ...	54	36	36	46	18					24		
			5	Barady ...	46	14	26	26	18				972	24		
			6	Gollahally ...	178	152	148	142	48					96		
	Nijagal ...		7	Matkur ..	57	45	44	12	10	1956	1740	1728		24		
			8	Hessarghatta ...	22	58	185	138	36					120		
			9	Tarabanahally ..	58	76	282	148	58					120		
			10	Tyamagondal No. I ...	146	312	401	222	114					132		
			11	Do „ II ..	335	127	113	130	43					108		
			12	Doddabele ...	4	...	..	..	30				672	12		
	Begoor ...		13	Begoor ...	184	132	110	118	88					108		
	Nijagal ...		14	Dobuspete ...	81	69	82	84	28					102		

Kankanhalli	Kankanhalli ...	Kankanhalli ..	1	Kankanhalli ...	354	400	366	451	175					504		
			2	Do ...	433	465	306	331	252					468		
			3	Do ...	755	693	359	383	148					396		
	Muduvadi ..		4	Muduvadi ...	175	186	137	103	49					172		
	Maralwadi ...		5	Maralwadie ...	131	140	171	131	68					108		
	Kodihalli ..		6	Kodihalli ..	164	130	127	46	56					48		
	Uyomballi ..		7	Mullahalli ...	218	206	124	89	34	1560	2064	2268	2268	196		
	Sathanur ...		8	Sathanur ...	287	284	93	185	85					132		
			9	Venkatrayerdoddi ...	124	102	82	44	30					24		
	Uyamballi ...		10	Alahalli ...	...	4	106	51	32					24		
	Harohalli ...		11	Harohalli ...	138	117	92	129	66					96		
	Somanahalli ...		12	Somanahalli ...	82	78	57	66	28					36		
			13	Inam Kagglipura ..	211	219	143	277	153	138	184	144	144	204		
Magadi	Magadi ...	Magadi ...	1	Magadi ...	346	195	240	240	108							
			2	do ..	342	239	313	287	160							
	Sathanur ...		3	Agalkote ...	76	76	62	68	34							
	Solur ...		4	Solur ...	84	62	84	102	44							
			5	Banavadi ..	85	40	31	45	24							
	Gudemaranahalli ...		6	Motaganahalli ...	103	86	74	54	80							
	Kudur ...		7	Kudur ...	28	20	34	109	42	984	1116	912	1044	924	1—1—6 Molasses arrack	1—4—6 Jaggory arrack
	Tippasandra ..		8	Talekerepalya ..	64	60	52	86	42							
	Madabalu ...		9	Bachenahally ..	56	67	46	65	32							
	Tavarekere ...		10	Tavarekere	171	164	114	52	32							
			11	Ganapatihally ...	100	74	70	70	34							
			12	Huluvenahally ...	84	72	76	70	40							
			13	Doddery ...	82	60	64	80	24							
			14	Manchanabele ...	50	52	..	98	14							
Channapatna	Channapatna ..	Channapatna ...	1	Channapatna No. I ...	1058	1077	1336	1321	451					2580		
			2	Do „ II ...	551	696	449	371	218							
			3	Do „ III ...	435	595	590	588	202							
			4	Do „ IV ..	465	439	517	480	164							
	Malur ...		5	Byrapatna ...	159	170	148	158	62	2796	3060	3252	3300	108		
	Muddgere ..		6	Santemogenahalli ...	111	112	96	52	34					72		
	Virupakshipur...		7	Neelasundra ...	166	123	148	122	36					72		
			8	Haniyur ...	102	74	61	36	26					42		
			9	Bullapatna ...	166	174	174	144	52					96		
			10	Geejagadasendoddi ...	50	66	42	38	18					24		
			11	Dyavapatna ...	111	126	124	74	42					42		
	Honganur ...		12	Inam Kudlur ...	188	191	183	170	64	60	180	108	120	120		

Arrack Schedule for the year 1906-07.—*contd.*

Taluk	Hobli	Name of Depot from which the shops are supplied	Serial No. of shops in each village or town	Name of village or town in which the shop is situated	Consumption in each shop					Rental of each shop or group of shops					Amount of gross profit allowed for retail vend per gallon of Arrack	Remarks
					1901—02	1902—03	1903—04	1904—05	1905—06 for 5 months	1901—02	1902—03	1903—04	1904—05	1905—06		
1	2	3	4	5	6	7	8	9	10	11	12	13	14	15	16	17
					Gls.	Gls.	Gls.	Gls.	Gls.	Rs.	Rs.	Rs.	Rs.	Rs.	Rs. a. p.	
Closepet Sub	Closepet ...	Closepet ...	1	Closepet No. 1 ...	885	903	917	646	448	1860	2040	2172	2148	996	Molasses arrack 1—1—6 Jaggery arrack 1—4—6	
			2	Do No. 2 ...	752	787	821	820	463					804		
			3	Kumbarddodi ..	110	100	112	104	37					96		
	Bidadi ...		4	Bidadi ...	196	200	277	342	169					252		
	Makali ...		5	Kutagal ..	76	144	136	122	77					96		
	Kunagal ...		6	Kotahalli ...	113	83	95	50	4					24		
	Makali ...		7	Jalamangala ...	95	58	104	65	37					48		
			8	Gungarahalli ...	69	63	103	76	59					54		
Anekal	Anekal ...	Anekal ...	1	Anekal Town I ...	212	276	187	189	142	1800	3480 whole of Anekal Taluk	3000 whole of Anekal Taluk	3480 whole of Anekal Taluk	180		
			2	Do No. II ...	332	180	213	193	77					144		
			3	Do No. III ...	216	364	296	330	138					192		
			4	Do No. IV ...	115	67	148	118	93					168		
	Athibele ...		5	Athibele ..	146	152	166	123	60					120		
			6	Do ...	180	124	127	140	58					120		
	Iggaloor ...		7	Chendapura ...	248	266	291	268	77					228		
			8	Hennagara ..	64	52	10	38	14					48		
			9	Thatnahalli ...	33	40	45	4	..					...		
	Jigani ...		10	Jigani ..	141	229	321	308	124					168		
			11	Do ...	130	79	56	62	22					156		
			12	Banneraghatta ...	174	147	167	80	50					120		
	Haragadde ...		13	Haragadde ...	29	32	23	46	15					24		
			14	Chikosahalli ...	31	34	36	32	11					24		
	Sarjapura ...	Huskoor ...	15	Sarjapura ...	196	204	236	122	94					156		
			16	Do ...	243	223	208	132	72					168		
			17	Dommasandra ..	296	315	308	323	86					204		
			18	Do ...	238	262	74	100	90					228		

Anekal	Bidarguppe ...		19	Handenahalli ...	32	54	36	53	20	1920	3480 whole of Anekal Taluk	3000 whole of Anekal Taluk	3480 whole of Anekal Taluk	36	Rs. 1—1—6 Molasses arrack	Rs. 1—4—6 Joggory arrac*	
			20	Huskur ...	283	382	226	181	76					240			
			21	Do ...	264	368	251	201	52					228			
			22	Koodlu ...	72	81	53	39	35					36			
			23	Hebbagodi ...	174	160	110	87	50					60			
			24	Bommasandra ...	61	51	56	58	26					36			
			35	Muthanallur ...	219	190	53	105	46					48			
			26	Bidarguppe ...	120	102	94	86	26					66			
			27	Yedavanahalli ..	45	38	...	...	...					...			
Devanhalli	Devanhalli ..	Devanhalli Bonded Depot ...	1	Devanhalli No. I ...	337	592	376	920.15	392	3168	1080	1344	1680	720			
			2	Do No. II ...	305	284	450	286	240					264			
	Kundana ...		3	Kundana ...	132	188	156	230	68					180			
			4	Byaderhalli ...	84	168	80	72	40					36			
	Channarayapatna		5	Channarayapatna ...	138	188	208	208	82					144			
			6	Biddalapura ...	116	126	118	136	46					96			
			7	Gopasandra ...	136	130	157	152	78					120			
	Vadigenahalli ...		8	Vadigenahalli No. I ...	538	714	916	640	354					756			
			9	Do No. II ...	444	606	676	966	354					864			
	Avathy ..		10	Avathy ...	136	108	244	274	90		1224	1476	2160	252			
			11	Harohalli ...	126	122	108	126	64					120			
			12	Karahalli ...	131	144	128	124	46					84			
	Jala ...		13	Jala ...	124	102	194	234	88					156			
			14	Bettahalasur ..	129	114	78	100	60					60			
			15	Thindlu ...	91	97	110	100	44					72			
	Budigere ...		16	Budigere No. I ...	274	338	524	518	129		720	720	1116	222			
			17	Do No. II ...	202	246	198	220	180					408			
			18	Bagalur ...	108	128	180	184	60					138			
Bowringpet	Dasarahosahalli	Bowringpet Depot ..	1	Robertsonpete ...	4668	6400	6087	8186	2476	5400	14400	10200	10680	14700			
			2	Do ...	3458	4518	3186	9618	2589	5772	9720	7680	9840	14400			
			3	Oorigaum ...	6907	6755	4980	6191	1851	6060	12300	9600	10860	9600			
			4	Do ...	2642	3473	3591	5474	1788	5400	9600	6600	10620	10800			
			5	Peddapalli ...	1247	1581	1647	1552	446	4140	6060	3600	3720	3000			
			6	Gatragaddahalli ...	1560	2187	1495	1083	327	4680	4500	3960	3660	3000			
			7	Pichapalli ...	1205	1319	1252	1118	273	3960	4200	3480	3360	2400			
			8	Masikum ...	5191	5523	5955	7253	2109	7440	8760	9984	11520	10800			
			9	Do ...	6037	8077	7547	9058	2634	7560	8760	10260	12000	12000			
			10	Soorapalli ...	2789	5911	9305	9814	2908	9600	9360	7980	10800	14460			
			11	Baliganapalli ...	7575	12447	9362	9498	2536	8760	8520	10920	11700	13680			
			12	Chinnaganahalli ...	1138	644	567	500	199	1980	1800	1032	960	720			
			13	Gatmadamungala ...	678	619	358	370	86	1548	1344	780	1080	720			
			14	Thirmalapalli (Byatrayanahalli) ...	1206	1020	2031	3524	768	1500	1500	600	1620	3600			

Arrack Schedule for the year 1906-07.

Taluk	Hobli	Name of Depot from which the shops are supplied	Serial No. of shops in each village or town	Name of village or town in which the shop is situated	Consumption in each shop					Rental of each shop or group of shops					Amount of gross profit allowed for retail vend per gallon of Arrack	Remarks
					1901—02	1902—03	1903—04	1904—05	1905—06 for 5 months	1901—02	1902—03	1903—04	1904—05	1905—06		
1	2	3	4	5	6	7	8	9	10	11	12	13	14	15	16	17
					Gals.	Gals.	Gals.	Gals.	Gals.	Rs.	Rs.	Rs.	Rs.	Rs.	Rs. a. p.	
Dowringpet	Kyasumballi ...	Bethamangala Depot.	15	Kempapura ...	61	56	40	41	20						Molasses arrack Rs. 1—1—6 Jaggery arrack Rs. 1—4—6	(a) 1 Bethamungala 2 Hungala 3 Jayamangala 4 Badamakanahalli
	Dasarahosahalli	Bowringpet Depot.	16	Doddavalagamadi ..	3046	5901	2882	4284	1297	4632	4632	4980	6240	4200		
	Do ...	Do ...	17	Ajjampalli ..	495	800	1149	417	109	1512	1260	1152	1380	720		
	Do ...	Do ...	18	Chinnakote ...	150	204	762	216	48	855	540	1200	816	360		
	Do ...	Do ...	19	Dasarahosahalli ..	268	348	321	380	48	726	726	972	876	672		
	Do ...	Do ...	20	Doddrahalli ...	128	113	138	149	42	219	204	228	228	216		
	Bethamangala ...	Bethamangala Depot.	31	Badamakanahalli ..	83	93	94	110	46							
	Bowringpet ...	Bowringpet Depot ...	22	Bowringpet ...	961	1051	1231	1085	318	2124	1740	1860	1860	2400		
	Do ...	Do ...	23	Do ...	467	884	983	1057	323	1740	1320	1272	1500	1440		
	Do ...	Do ...	24	Do ..	448	989	1180	1210	356	2496	2400	2040	2100	2640		
	Do ...	Do ..	25	Do ...	749	1232	1030	1122	348	2112	1680	1680	1800	2400		
	Do ..	Do ...	26	Sulikunte ...	241	231	356	260	72	252	312	216	336	384		
	Do ..	Do ...	27	Desihalli ...	221	426	667	607	114	612	612	864	840	828		
	Bethamangala ..	Bethamangala Depot.	28	Bethamangala ...	460	551	1387	1058	178	(a) 792	(a) 1680	(a) 1440	(a) 3120	(a) 3480		
	Do ...	Do ...	29	Jayamungala ...	88	84	66	66	20							
	Do ...	Do ...	30	Hungala ...	124	106	231	115	28							
	Kyasumballi ...	Do ...	31	Vengasundra ...	112	151	124	70	30							
	Do ..	Do ..	32	Ramasagara (Thimmakondepalli) ...	86	107	105	256	109	(b) 228	(b) 180	(b) 180	(b) 660	(b) 744		(b) 1 Ramasagara (Thimmakondepalli) 2 Vengasundra
	Do ...	Do ...	33	Kyasumballi ...	135	292	137	238	62	(c) 480	(c) 480	(c) 432	(c) 696	(c) 1020		(c) 1 Kyasumballi 2 Kempapura 3 Hosapetta (Kondathimmanapalli) 4 Peddagondlapalli
	Do ...	Do ...	34	Peddagondlapalli ..	33	119	153	89	20							
	Do ...	Do ...	35	Hosapetta (Kondathimmanapalli) ..	27	64	46	66	18							

54

Bowringpet	Kamasundra ...	Bowringpet Depot...	36	Kamasandra ...	291	373	302	278	134	576	420	840	720	480	Rs. a. p.	
	Do ...	Do ...	37	Appepalli ...	790	832	323	601	140	2544	1980	1800	1152	1200		
	Do ...	Do ...	38	Yelachamunda ...	105	169	184	172	50	432	312	492	300	300		
	Budikote ..	Do ...	39	Kalavanchi ...	80	80	91	155	48	60	84	132	120	216		
	Do ...	Do ...	40	Budikote ...	322	364	343	294	78	360	300	312	420	420		
Malur	Malur ..	Malur Kasaba Depot.	1	Malur ...	507	435	770	509	222	1800	1560	1440	1620	744		
	Do ...		2	Do ...	292	288	550	579	273					792		
	Do ..		3	Kudiyanur ...	153	168	161	122	39					132		
	Do ..	Narasapur Depot. ...	4	Thornahalli ...	220	209	233	212	62					204		
	Lakkur ...	Malur Kasaba Depot.	5	Lakkur ...	300	285	278	273	127	670	684	648	720	480		
		Do ...	6	Thirupathi ..	168	242	168	200	98					372		
	Tyakal ...	Do ...	7	Tyakal ...	183	346	347	375	111	240	216	372	456	372		
		Do ...	8	Doddakuntur ...	108	98	135	124	48					96		
	Malur ..	Do ...	9	Masti ...	292	339	326	271	92	330	360	372	444	300		
	Masti ...	Do ...	10	Rajenahalli ...	169	170	208	192	68					180		
		Do ...	11	Hulidenahalli ...	183	149	125	80	52	145	144	180	276	204		
	Tykal ...	Do ...	12	Thoralakki ...	70	119	131	79	23					72		
			13	Narasapur ...	217	191	255	260	112	450	408	408	408	432		
	Narasapur ...	Narasapur Depot. ...	14	Guttahalli ...	163	168	138	122	36					168		
			15	Sivarapatna ...	73	71	79	84	22					84		
Chikballapur	Chikballapur ...	Chikballapur	1	Chickballapur ..	1421	1297	1389	1215	575	4440	3900	4152	4620	5160	Molasses arrack Rs. 1—1—6 Jaggory arrack Rs. 1—4—6	
			2	Do ...	609	1069	1317	748	305							
			3	Do ..	384	528	799	663	248							
			4	Do ...	553	400	773	904	315							
			5	Patrenahalli ...	176	178	156	182	68							
	Nandi ..		6	Nandi ...	226	162	248	280	84							
			7	Bidiganahalli ...	174	220	172	172	56							
			8	Chikkadiganahalli ...	134	154	196	246	78							
	Purnasagara ...		9	Hunegal ...	134	106	102	166	68							
			10	Gungrekalve ...	140	124	136	124	54							
			11	Dibbur ...	84	72	74	96	46							
	Mondical ...		12	Peresandra ...	158	204	206	220	80							
			13	Mondical ...	125	110	132	102	38							
Sidlaghatta	Sidlaghatta ...	Sidlaghatta	1	Sidlaghatta ...	410	634	696	632	246	3012	1836	1812	1848	2160		
			2	Do ...	476	457	596	721	254							
			3	Palicharlu ...	77	146	114	102	46							
	Jangamkote ...		4	Melur ...	399	517	501	467	177							

55

Arrack Schedule for the year 1906—07.

Taluk	Hobli	Name of Depot from which the shops are supplied	Serial No. of shops in each village or town	Name of village or town in which the shop is situated	Consumption in each shop					Rental of each shop or group of shops					Amount of gross profit allowed for retail vend per gallon of Arrack	Remarks
					1901—02	1902—03	1903—04	1904—05	1905—06 for 5 months	1901—02	1902—03	1903—04	1904—05	1905—06		
1	2	3	4	5	6	7	8	9	10	11	12	13	14	15	16	17
Sidlaghatta	Jangamkote ...	Sidlaghatta	5	Bhaktharahalli ..	79	96	120	140	42						Molasses arrack Rs. 1—1—6 Jaggory arrack Rs. 1—4—6	
			6	Malamachalahalli ...	97	96	104	110	46							
			7	Jangamkote ...	401	427	410	410	150							
			8	Nagamangala ...	182	218	191	227	78							
			9	Angathati ...	90	106	119	140	46	900	672	1068	1152	1200		
			10	Venkatapura ...	120	156	176	180	55							
			11	Chimangala ...	96	86	121	145	56							
	Bassettihalli ...		12	Bassettihalli	125	168	154	142	54							
	Sadli ...		13	Dibburhalli ..	116	163	169	138	50							
			14	Sadli ...	136	150	172	240	82	552	456	480	504	600		
			15	Thimmasandra ..	95	82	96	145	52							
	Bassettihalli ..	Chintamani	16	Gunjagunte ...	62	90	101	110	34							
	Sidlaghatta ...		17	Kundalgurkai ...	110	132	205	122	42							
	Chilkalnerpu ..		18	Koral Party ..	150	122	164	157	58							
			19	Nandanahosalli ..	92	104	98	120	40	432	348	300	300	432		
			20	Chilakalnerpu ...	94	80	109	132	52							
Kolar	Kolar Kasba ...	Kolar Town	1	Oopparpet .	623	655	632	995	271				744			
			2	Golpet ...	557	685	807	1354	333				1212			
			3	Dandapet ...	527	602	666	718	248	3180	2580	2460	612	3720		
			4	Market ...	460	550	770	714	259				1080			
			5	Dimba ..	52	66	54	65	20				24	24		
			6	Vanarasi ...	163	212	2 64	198	38				252			
			7	Matnahalli ...	64	124	93	100	52				84			
			8	Sugatur ...	170	186	261	251	124				252	864		

Kolar Town	Hulur ...	Kolar	9	S.-Agrahara ...			74	79	32				96			
	Kolar ..		10	Mallasandra ...			97	293	46				198			
	Hulur ...		11	Velgalburray ...	100	104	86	100	40				66	60		
	Vokkaleri ...		12	Garudapaliya ...			128	315	58				108	168		
			13	Vokkaleri ...	173	146	176	214	91				120	300		
	Huthur ...		14	Korgondahalli ...	48	54	56	42	24				36	36		
			15	Thalagunda ...	...	...	120	92	26	2184	1800	1836	60	60		
			16	Arab Kothanur ...	81	81	73	69	16				48	72		
			17	Thumbaihalli ...	206	275	271	236	76				288	240		
			18	Shapur ...	60	74	126	96	24				60	60		
			19	Ajjapalli ...	104	84	162	156	40				60	108		
			20	Aralkuntai ...	38	61	136	...	16				...	60		
	Vemgal ...		21	Vemgal ...	157	152	123	180	66				144	228		
			22	Kyalanur ...	272	307	542	783	285				486	720		
			23	Seethi ...	115	111	124	172	85				138	144		
Mulbagal Town	Mulbagal Kasaba	Mulbagal Town	1	Mulbagal No. I ...	332	291	378	361	99				642	672		
			2	Mulbagal No. II ...	326	225	324	392	131				588	624		
			3	Kappalmadagu ...	...	...	...	44	56				...	228		
	Byrakur ...		4	Byrakur ...	131	123	91	106	50				180	180		
			5	Nangali ...	103	106	142	332	106				180	300		
			6	Gudipalli ...			42	57	20				36	48		
	Mallinaikanahalli		7	Tailur ...	210	203	212	205	91				402	336		
			8	Mallinaikanahalli ...	74	67	76	66	22				102	102		
			9	Avani ...	88	157	78	140	34	1920	1920	1944	180	132		
			10	Kothamangala ...	72	102	110	65	8				96	90		
			11	Mittur & Santai ...	90	66	93	61	30				108	96		
			12	V.-Hosahalli ...	24	25	52	44	12				12	12		
	Duggasandra ...		13	Koladavi ...	70	100	86	91	20				90	108		
			14	Vuthanur ...	82	73	100	137	48				156	192		
Bagepalli	Bagepalli ...	Bagepalli	1	Bagepalli ...	256	222	277	278	84				180	180		
			2	Mullasandra ...	50	44	54	60	28				12	16 8 0		
			3	Yellampalli ...	120	102	115	111	48				60	54		
	Mittemari ..		4	Mittemari ...	122	89	80	137	50	405	324	288	36	42		
	Gulur ...		5	Gulur ...	70	58	76	160	46				42	81		
			6	Margankunte ...	52	54	67	112	55				42	60		
			7	Gorthapalli ..	41	33	39	49	22				12	12		
		Pathapalya ...	8	Gudibanda ...	187	172	233	166	83				120	72		
	Gudibanda ...	Bagepalli ..	9	Hampasandra ...	38	26	44	22	6				12	12		
			10	Beechaganahalli ...	50	52	62	66	26	175	150	96	12	12		
	Somenahalli ...		11	Thirumani ..	90	66	76-32	82	48				27	24		
			12	Vorlakonde ...	24	22	40	44	22				12			

Rs. 1—1—6 for molasses
arrack and Rs. 1—4—6
for jaggery arrack.

P.S

Arrack Schedule for the year 1906-07—*contd.*

Taluk	Hobli	Name of Depot from which the shops are supplied	Serial No. of shops in each village or town	Name of village or town in which the shop is situated	Consumption in each shop					Rental of each shop or group of shops					Amount of gross profit allowed for retail vend per gallon of Arrack	Remarks
					1901—02	1902—03	1903—04	1904—05	1905—06 for 5 months	1901—02	1902—03	1903—04	1904—05	1905—06		
1	2	3	4	5	6	7	8	9	10	11	12	13	14	15	16	1
					Gls.	Gls.	Gls.	Gls.	Gls.	Rs.	Rs.	Rs.	Rs.	Rs.	Rs. a. p.	
Bagepalli	Pathapalya ...	Pathapalya ...	13	Pathapalya ...	45	66	66	90	42				36	36		
	Do ..		14	Somanathapur ..	57	75	122	127	68				24	51		
	Gulur ...		15	Naremuddepalli ..	34	12	18	63	16				12	33		
	Chelur .		16	Chelur ...	145	146	142	222	86				144	204		
	Do ...		17	Puligal ..	48	39	46	79	30				24	42		
	Do ...		18	Palyakere ...	60	55	140	142	36	520	426	336	36	36		
	Do ...		19	Billur ...	78	46	44	77	30				30	42		
	Do ..		20	Chawkvelu ...	76	91	72	76	26				42	42		
	Do ...		21	Venkatapur ...	36	44	58	68	26				27	30		
	Mittemari ..		22	Julpalya ...	66	80	100	137	64				48	87		
Chintamani	Chintamani ...	Chintamani ...	1	Chintamani ...	584	616	412	770	282					1872	1—1—6 Molasses arrack 1—4—6 for Jaggery arrack	
			2	Do Shandy ...	186	110	183	127	88							
			3	Ganjur ...	142	222	194	232	90					204		
			4	Kodathavadi ...	94	108	168	162	36					136		
			5	Chinnapura ...	66	86	162	116	38					84		
	Ambagidrug ...		6	Kurubur ...	126	116	116	128	50	0 0	0 0	0 0	0 0	84		
			7	Kachihalli ...	60	66	99	86	28					48		
			8	Konapalli ...	224	274	230	294	120					420		
			9	Kotagal ...	74	100	104	98	34	4455	4050	3380	3960	120		
			10	Settihalli ...	62	86	102	68	28					60		
			11	Kanganahalli ...	87	104	107	122	38					108		
	Muragamalla ...		12	Bathalahalli ...	155	96	104	226	58					102		
	Munganahalli...		13	Muragamalla ...	200	216	211	251	92					312		
			14	Yegavakota ...	102	182	104	162	48					216		

	Kivara ...		15	Yiragampalli ...	51	70	52	138	42					102		
			16	Batlapalli ...	46	88	206	114	85					192		
			17	Bodampalli ...	46	70	56	54	44					60		
			18	Kaivara ...	221	239	301	312	96	4455 0 0	4050 0 0	3380 0 0	3960 0 0	480		
			19	Thalagavara ...	138	100	197	159	110					180		
			20	Kallahalli ...	233	270	232	268	76					264		
			21	Muthakapalli ...	79	130	156	112	40					138		
Srinivaspur	Srinivaspur ...	Srinivaspur ...	1	Srinivaspur ...	338	332	332	384	126				384	480		
			2	Nambihalli ...	168	146	212	185	52				234	264		
			3	Gundanatha including Lowcharavapalli fair.	44	56	107	222	60				174	288		
	Ronur ...		4	Ronur ...	235	134	239	356	130				252	396		
			5	Somayajalapalli ...	48	72	62	77	36				63	78		
	Nelavanki ...		6	Yerakalve ...	74	96	98	115	58	1975 0 0	1560 0 0	1092 0 0	96	120		
			7	Pulgurkote ...	50	50	54	54	18				66	66		
	Addagal ...		8	Addagal ...	46	88	80	92	34				78	72		
			9	Gownpalli ...	51	114	168	210	67				180	213		
	Royalpod ...		10	Royalpod ...	127	97	141	214	71				114	180		
	Yeldur ...		13	Yeladur ...	161	167	190	230	105				204	324		
	Do ...		12	Yatharur ...	74	70	109	102	30				102	96		
Goribidnur	Goribidnur ...	Goribidnur ...	1	Goribidnur ...	326	449	469	358-3	206							
	Manchenahalli		2	Manchenahalli ...	344	289	272	224-0	124							
	Darimaikanapaly		3	Namagondlu ...	106	61	94	61-0	56							
	Thondebhavi ...		4	Thondebhavi ...	88	68	94	145-0	70	744	648	624	804	792		
	Do ...		5	Taridalu ...	50	24	83	94-0	48							
	Hossur ...		6	Hossur ...	122	68	131	105-0	50							
	Nagaragere ...		7	Vatadahossahalli ...	...	42	87	46-0	38							
				TUMKUR DISTRICT.												
Tumkur	Tumkur ...	Tumkur ...	1	Tumkur Fort ...	1170	1187	1069	874	422	816	840	888	888	768		
	Do ...		2	Do Horapete ...	288	314	428	293	96	360	384	300	318	264		
	Do ...		3	Do Mandipete ...	521	626	399	450	396	414	432	384	459	384		
	Ooradigere ...		4	Kyathsandra ...	106	47	86	86	54				42	36		
	Do ...		5	Panditanahalli ...	93	101	88	58	44				30	30		
	Gulur ...		6	Honnudike ...	122	97	80	74	58				36	18		
	Ooradigere ..		7	Ooradigere ...	70	54	4	93	32	792	696	336	24	45		
	Bellavi ...		8	Bellavi ...	76	58	2	6	40				24	24		
	Hebbur ...		9	Hebbur ...	139	174	96	135	87				108	96		
	Kora ...		10	Kestur ...	82	56	34	66	28				24	48		
	Hebbur ..		11	Honasigere ...	84	56	24	58	39				24	18		

1—1—6 Molasses arrack
1—4—6 for Jaggory arrack

Arrack Schedule for the year 1906-07—contd.

Taluk	Hobli	Name of Depot from which the shops are supplied	Serial No. of shops in each village or town	Name of village or town in which the shop is situated	Consumption in each shop					Rental of each shop or group of shops					Amount of gross profit allowed for retail vend per gallon of Arrack	Remarks
					1901—02	1902—03	1903—04	1904—05	1905—06 for five months	1901—02	1902—03	1903—04	1904—05	1905—06		
1	2	3	4	5	6	7	8	9	10	11	12	13	14	15	16	17
					Gals.	Gals	Gals.	Gals.	Gals.	Rs.	Rs.	Rs.	Rs.	Rs.		
Maddagiri.	Maddagiri ...	Maddagiri.	1	Maddagiri ...	349	312	371	356	159	717	718	551	312	324	1—1—6 for Molasses Arrack. 1—4—6 for Jaggery Arrack.	
	Koratagere ..		2	Koratagere ...	147	187	213	216	106				120	120		
	Kodigenahalli ..		3	Kodigenahalli ...	74	46	65	104	29				24	24		
	Puravara ...		4	Byalya ...	60	56	54	69	40				24	12		
Chikna-yakan-halli.	Chiknayakan-halli.	Chikna-yakan-halli.	1	Chiknayakanhalli ...	786	663	706	677	355	715	800	650	624	576		
	Kandikere ...		2	Kandikere ...	56	52	...	49	46				12	12		
	Huliyar ...		3	Huliyar ..	212	163	287	243	110				204	120		
	Do ...		4	Bellara ...	...	...	...	133	100				36	66		
Sira.	Sira ...	Sira.	1	Sira ...	392	341	375	412	204	1210	970	770	306	312		
	Do ...		2	Sira, Santepett ...	133	127	141	174	90				120	120		
	Bukkapatna ...		3	Bukkapatna ...	70	56	54	58	18				36	24		
	Kallambella ...		4	Halenahalli ...	96	84	64	64	32				42	30		
	Nadoor ...		5	Patnaiknahalli ...	251	187	197	298	220				180	288		
	Hulikunte ...		6	Kamuganahalli ...	102	140	151	220	152				72	222		
	Do ..		7	Baragoor ...	85	75	59	162	91				48	66		
	Do ...		8	Chiratahalli ...	95	75	78	152	104				48	48		
	Nadoor ...		9	Hunasehalli ...	74	39	54	55	30				24	12		
	Hulikunte ...		10	Hulikunte ...	...	...	66	173	87				54	60		

Gubbi.	Gubbi ..	Gubbi.	1	Gubbi ...	420	411	428	430	185	864	756	601	504	480	1—1—6 for Molasses Arrack.	1—4—6 for Jaggory Arrack.
	Do ...		2	Singonahalli ...	112	94	113	148	55				87	117		
	Nittur ...		3	Nittur ...	49	44	24	61	88				54	33		
	Chelur ...		4	Bidare ...	48	16	32	32	18				60	24		
	Kadaba ..		5	Kadaba ...	134	104	160	79	127				144	108		
	Kallur ...		6	Kallur ...	137	121	226	177	128				192	144		
	Hagalvadi ...		7	Hagalvadi ...	88	37	50	61	21				66	36		
	Chitnahalli ...		8	Mavinahalli ...	48	...	..	18	88				24	24		
Tiptur.	Tiptur ...	Tiptur.	1	Tiptur ...	824	1007	936	1102	526	1330	1185	1296	984	1092		
	Nonavinkere ...		2	Nonavinkere ...	185	155	97	81	63				108	66		
	Honnavalli ...		3	Honnavalli .	122	79	92	G. D. 96-46	37				48	72		
	Kibbanhalli ...		4	Bansandra ...	96	42	4	68	48				12	18		
	Turu ekere ...		5	Turuvekere ...	264	204	232	235	100				216	198		
Pava-gada.	Pavagada ...	Pavagada.	1	Pavagada ..	244	179	194	397	201	241	254	240	240	1-0		
	Hosakote ...		2	Hosakote ...	102	115	150	255	132					72		
	Gummagatta ...		3	Venkatapura ...	56	44	64	93	42					19½		
	Racharlu ..		4	Kyathaganacharlu ..	74	48	36	63	36					12		
Kunigal.	Kunigal ..	Kunigal.	1	Kunigal ...	579	600	769	630	200	960	840	884	780	672		
	Huliyurdurga ...		2	Huliyurdurga ...	72	70	86	84	49				120	72		
	Yadiyur ...		3	Nagasandra ...	32	108	108	102	31				114	60		
	Amratur ...		4	Amratur ...	72	72	65	81	35				84	60		
	Yadiyur ...		5	Yadiyur Jatra Shop ...	..	...	10	12	..				7-8-0	7-8-0		
Hassan.	Hassan ...	Hassan. Arkalgud.	1	Hosaline ...	748	777	730	813	421	984	816	900	840	720	1—1—6	1—4—6
	Do ..		2	Katakarabidi ...	896	1181	1147	802	313	996	840	900	840	720		
	Do		3	Do ...	935	746	772	503	280	876	840	900	780	600		
	Do ...		4	Hosaline ...	872	1003	873	484	146	780	840	864	840	720		
	Alur ...		5	Alur ..	459	331	327	357	102	636	720	948	360	420		
	Palya ...		6	Palya ...	156	153	152	122	48				168	120		
	Kundur ...		7	Kundur ...	92	98	103	117	48				192	84		
	Kattaya ...		8	Gorur ...	137	150	184	120	45				120	120		
				SANTE SHOPS.												
	Dudda ...	Hassan.	9	Dudda Sante ...	...	..	145	198	105	...	...	36	186	1-0		
	Salagame ..		10	Salagame Sante ..	.	..				...	...					
	Grama ...		11	Grama Sante ...	..	...				...	...					
	Do ...		12	Kowsika Sante ..	.	...				...	...					

19

Arrack Schedule for the year 1906-07—*contd.*

Taluk	Hobli	Name of Depot from which the shops are supplied	Serial No. of shops in each village or town	Name of village or town in which the shop is situated	Consumption in each shop					Rental of each shop or group of shops					Amount of gross profit allowed for retail vend per gallon of Arrack	Remarks
					1901—02	1902—03	1903—04	1904—05	1905—06 for 5 months	1901—02	1902—03	1903—04	1904—05	1905—06		
1	2	3	4	5	6	7	8	9	10	11	12	13	14	15	16	17
					Gals.	Gals.	Gals.	Gals.	Gals.	Rs.	Rs.	Rs.	Rs.	Rs.	Rs. a. p.	
Manjarabad.	Sakalespur ...	Saklespur.	1	Saklespur ...	365	779	643	342	64	4272—0—0	3540—0—0	3660—0—0	672	3000—0—0	Molasses Arrack Rs. 1—1—6 and Jaggory Arrack 1—4—6.	
	Do ..		2	Do ...	824	610	625	601	244				552			
	Do ...		3	Do ...	535	442	399	357	309				480			
	Do ..		4	Do ...	370	389	204	516	67				312			
	Do ..		5	Halebelur ...	60	56	120	32	2				24			
	Balagodu ...		6	Belagodu ...	312	367	289	288	126				516			
	Do ...		7	Ballu ...	56	100	46	127	26				36			
	Hanabalu ...		8	Hanabalu ..	68	128	71	122	48				156			
	Do ...		9	Hadige ...	150	153	70	52	36				132			
	Marnahalli ...		10	Marnahalli ..	61	56	76	47	16				24			
	Yeslur ...	Yeslur.	11	Yeslur ...	87	118	94	92	32				36			
	Do ...		12	Changadahalli ..	94	58	131	62	24				12			
	Do ..		13	Hettur ...	217	252	225	140	81				108			
	K. Hoskote ...		14	Sukkravarasante ...	176	220	143	119	73				144			
	Do .		15	K. Hosakote ...	163	162	149	129	42				120			
	Do ..		16	Mangay ..	191	201	147	117	29				240			
Belur	Belur ..	Belur.	1	Belur Kasaba including Sante ...	648	339	551	457	147	1740	1512	2148	432	2160		
	Do ..		2	Do ...	267	344	390	438	146				348			
	Do ...		3	Gendihalli including Sanivarasante ...	213	316	258	304	74				360			
	Arehalli ...		4	Siddrahalli including Tholalusante ...	238	229	229	167	61				252			
	Do ...		5	Chicknahalli including sante ..	235	312	268	232	103				636			
	Do ..															

Belur.	Do ..	Belur.	6	Aribail ...	183	232	252	100	63				144			
	Bickodu ...		7	Bickodu including Sante..	...	...	...	207	76				300			
				SANTE SHOPS.												
	Belur ...			Hanike Sante ..												
	Madihalli ...			Huligunde Sante ...	...	...	...	115	50				72			
	Halebedu ...			Halebedu Sante ...												
Arsikere.	Arsikere ...	Arsikere.	1	Arsikere No. I. ...	488	397	492	494	213	1905	1764	1764	732	768		
	Do ..		2	Do II. ...	604	745	652	709	284				756	804		
	Banavar ...		3	Banavar ...	269	294	298	282	118				336	252		
Chennarayapatna.	Chennarayapatna	Hassan ...	1	Channarayapatna ...	576	429	537	580	246	600	504	480	480	528		
	Nuggihalli ...	Tiptur ...	2	Nuggihalli ...	..	...	...	182	74	...	...	...	42	66		
	Hirisave ...	Hassan ...	3	Hirisave ...	..	...	...	54	68	...	...	.	72	102		
	Anati ...	Tiptur ...	4	Navile ...	..	...	...	...	9	...	...	..	...	48		
Hole-Narsipur.	Hole-Narasipur	Arkalgud ...	1	Hole-Narasipur ...	359	832	641	570	258	780	492	864	696	708		
Arkalgud.	Arkalgud ...	Do	1	Arkalgud ...	328	387	586	533	210	672	540	600	528	510		
	Mallipatna ...		2	Mallipatna ...	90	115	128	167	51				96	114		
	Basvapatna ...		3	Konanur ...	171	278	363	307	184				390	336		
Tarikere.	Tarikere ...	Tarikere Bonded Depot.	1	Tarekere No. I ...	641	361	335	377	216	1320—0—0 1980-0-0	1740—0—0 2172-0-0	1752—0—0 2100-0-0	672	1620	Molasses Arrack 1—1—6 Jaggory Arrack 1—4—6.	
	Do ...		2	Do No. II ...	515	536	431	396	191				684			
	Do ...		3	Narasappana Chatra ...	136	110	126	78	25				180			
	Ajjampur ...		4	Ajjampur ...	252	236	189	243	103				312	276		
	Lingadahalli ...		5	Lingadahalli ...	149	154	149	199	72				204	336		
	Do ...		6	Kallattipur ..	258	256	315	291	90				612	600		
	Do ...		7	Nandibatlu ...	172	170	226	248	86				264	360		
	Do ..		8	Sampigekhan ...	407	301	278	412	176				324	360		
	Do ...		9	Kurukalmatti ...	99	102	112	165	62				132	180		
	Do ...		10	Santaveri ..	400	339	358	277	112				600	600		
	Lakkavalli ...		11	Kesarakoppa ...	42	2	2	...	49	384-0-0	360-0-0	408-0-0	...	60		
	Do ...		12	Lakkavalli ...	247	200	297	401	124				336	444		
Koppa.	Koppa ..	Koppa.	1	Koppa ...	158	179	282	282	121	1581	1812	1680	210	360		
	Do ..		2	Do ...	337	339	435	384	143				570	570		
	Do ...		3	Do ...	335	381	386	714	242				564	564		
	Do ...		4	Thalamakki ...	61	90	86	113	55				102	102		
	Do ...		5	Narvey ...	70	108	124	106	39				84	84		

63

Arrack Schedule for the year 1906-07—*contd.*

Taluk	Hobli	Name of Depot from which the shops are supplied	Serial No. of shops in each village or town	Name of village or town in which the shop is situated	Consumption in each shop					Rental of each shop or group of shops					Amount of gross profit allowedf or retail vend per gallon of Arrack	Remarks
					1901—02	1902—03	1903—04	1904—05	1905—06 for 5 months	1901—02	1902—03	1903—04	1904—05	1905—06		
1	2	3	4	5	6	7	8	9	10	11	12	13	14	15	16	17
					Gals	Gals.	Gals.	Gals.	Gals.	Rs.	Rs.	Rs.	Rs.	Rs.		
Koppa.	Koppa ...	Koppa ...	6	Nuggimakki ..	140	135	111	123	51				72	78	1—1—6 Kakumbi liquor. 1—4—6 Juggori liquy.	
	Do ..	Do ..	7	Kachikal ...	119	120	98	159	70				96	150		
	Do ...	Do ...	8	Berkodigay ...	101	132	202	213	76				138	168		
	Do ..	Do ...	9	Kokkodu ..	95	100	101	133	47				84	96		
	Belre ...	Do ...	1	Hariharpur ...	122	118	189	188	54				108	84		
	Hoskere ...	Do ...	2	Bandagadi ...	145	116	119	150	69				123	78		
	Do ...	Do ..	3	Bhanuvalli ...	132	127	131	136	61	327	420	396	96	72		
	Belre ...	Do ...	4	Shanuvalli ...	101	100	127	134	62				81	96		
	Do ...	Do ...	5	Shankerdavastana ...	45	86	109	104	48				75	51		
	Hoskere ...	Sringeri ...	1	Begar ...	118	117	128	164	91				96	126		
	Kigga ...	Do ..	2	Nemmar ...	128	90	124	129	50				108	114		
	Hoskere ...	Do ...	3	Neelandur ...	114	109	130	174	74	480	300	324	108	108		
	Kigga ...	Do ...	4	Kigga ...	124	94	124	111	44				156	144		
	Baggunji ...	Sollebile ..	1	Sollebile ...	151	172	148	151	72				336	279		
	Do ...	Do ...	2	Kulkere ...	119	66	84	73	32				60	60		
	Megunda ...	Do ...	3	Kattemane ...	46	48	67	64	18				48	108		
	Baggunji ...	Do ...	4	Guddethota ...	58	143	64	66	32	840	852	636	60	66		
	Megunda ..	Do ...	5	Honnagundi ...	106	103	147	181	77				180	126		
	Do ...	Do ...	6	Adigebile ...	57	93	98	96	44				96	96		
	Do ...	Do ...	7	Magundi ...	...	...		..	120				...	384		
	Sringeri ...	Sringeri ...	1	Sringeri ...	244	256	352	276	126				420	432		
	Jahgir ...	Do ..	2	Do ...	284	344	448	372	182				480	432		
	Do ...	Do ...	3	Kalavalli ...	100	123	122	155	68	1248	720	780	72	90		
	Do ...	Do ...	4	Kunchebile ...	85	92	102	148	50				72	72		
	Do ...	Do ..	5	Menase ...	88	83	121	150	43				72	168		
	Do ...	Do ...	6	Hosagrahara ...	138	138	142	182	63				138	180		

Yadehalli	Yedahalli	Yedahalli	1	Yedahalli	297	329	522	394	157	1,032	1,224	1,284	549	540	1—1—6 Kakumbi liquor.	1—4—6 Jaggory.	
	Do	Do	2	Do	354	426	248	307	118				480	540			
	Do	Do	3	Kodihalli	77	120	102	126	53				72	72			
	Do	Do	4	Thadasa	92	102	122	169	46				144	168			
	Do	Do	5	Hebbe and Jatra shop	127	153	152	172	84				120	162			
	Do	Do	6	Balehonur	205	349	379	448	187	348	324	336	432	420			
Chikmagalur.	Chikmagalur	Chikmagalur	1	Chikmagalur Town Jadrakere No. I	981	1146	1168	773	318	5,100	888	840	720	3840			
	Do		2	Do Market Lane No. II	960	813	1202	915	397		900	924	900				
	Do		3	Do Kasayagalli No. III	968	808	688	861	358		912	840	600				
	Do		4	Do Kasayagalli No. IV	934	338	693	613	244		900	660	600				
	Do		5	Do Kasayagalli No. V	1051	914	1110	848	328		900	792	780				
	Do		6	Do Sante street No. VI	936	674	563	572	200		600	576	600				
	Do		7	Nirvanaswami Mutt	102	379	218	194	60				174	174			
	Do		8	Muguthihalli	224	239	322	252	107				360	180			
	Do		9	Thogarihanklu	244	306	314	294	93				372	432			
	Jagara		10	Mattavara	143	238	287	127	113				240	162			
	Chikmagalur		11	Narayanahalli	20	56	4	110	38				24	48			
	Do		12	Hiremagalur	102	179	154	92	30				120	48			
	Do		13	Bigganahalli	172	176	189	128	68				156	132			
	Ambale		14	Sannenu	19	19	17	43	..				6	-			
	Jagara		15	Malalur Sante	.	...	...	110	107				60	60			
	Ambale		16	Vastara	111	97	176	174	71				168	180			
	Vastara		17	Koduvalli	81	68	52	80	47				48	61-8-0			
	Do		18	Thadakase	101	72	90	66	50				108	66			
	Do		19	Joladal No. I	222	263	323	362	154				372	408			
	Do		20	Do No. II	359	440	365	412	221				432	468			
	Do		21	Baskal	92	83	162	126	107	3,564	2,880	3,624	132	108			
	Do		22	Sukravarapet	128	144	103	59	34				96	24			
	Do		23	Indavara	102	286	66	149	65				72	84			
	Chikmagalur		24	Jakkanahalli	77	103	127	154	70				150	102			
	Vastara		25	Thoranamavu	88	105	74	112	50				42	48			
	Do		26	Aldur No. I	285	179	381	256	171				384	780			
	Aldur		27	Do No. II	372	325	398	247	149				312				
	Do		28	Do No. III	290	205	194	225					288				
	Do		29	Madenaralu	128	104	92	228	72				102	150			
	Do		30	Gullumpet	44	111	142	135	81				84	66			
	Do		31	Mallandur	80	78	89	119	65				84	90			
	Avati		22	Harjihalli	86	62	60	55	44				96	60			
	Do		33	Karagur	50	43	58	90	42				96	60			
	Do		34	Handi	39	66	79	73	33				60	24			
	Aldur		35	Kanathi	...	..	43	179	78				33	96			
	Avati																

Arrack Schedule for the year 1906—07.

Taluk	Hobli	Name of Depot from which the shops are supplied	Serial No. of shops in each village or town	Name of village or town in which the shop is situated	Consumption in each shop 1901—02	1902—03	1903—04	1904—05	1905—06 for 5 months	Rental of each shop or group of shops 1901—02	1902—03	1903—04	1904—05	1905—06	Amount of gross profit allowed for retail vend per gallon of Arrack.	Remarks
1	2	3	4	5	6	7	8	9	10	11	12	13	14	15	16	17
					Gals	Gals	Gals	Gals	Gals	Rs.	Rs.	Rs.	Rs.	Rs.	Rs. a. p.	
Kadur	Kadur ...	Kadur ...	1	Kadur	454	484	526	463	179	564	660	852	600	636	Molasses arrack Rs. 1—1—5 per gallon Jaggory arrack Rs. 1—4—6 per gallon	
	Sakrepatna ...		2	Sakrepatna ..	213	221	143	183	77				168	204		
	Birur ..		3	Birur	545	539	551	464	193	840	732	912	864	804		
Mudgire	Mudgere ...	Mudgere Bonded Depot.	1	Mudgere No. 1 ...	732	450	516	387	159	2280	2520	3420	600	624		
			2	Do No. 2 ...	598	429	325	230	157				624	612		
			3	Do No. 3 ...	564	475	367	258	114				636	624		
			4	Jabagere ...	140	188	183	115	74				252	252		
	Gonibeedu ...		5	Kannapura ...	118	161	117	116	51				96	60		
			6	Anajur bridge ...	92	45	...	138	6				348	156		
			7	Gonibeedu	185	263	224	274	106				420	168		
	Banakal ...		8	Devrunda ...	145	169	98	150	50				144	132		
			9	Banakal No. 1 ...	373	377	309	351	179				492	372		
	Melabangady ...		10	Do No. 2 ...	215	425	422	303	155				534	420		
			11	Niduvale ...	203	244	197	187	85				168	144		
	Kalasa ...		12	Javali ...	93	94	75	78	47	912	1020		96	72		
			13	Hirebalalu ..	98	128	236	225	108				288	252		
			14	Kalasa ...	136	281	297	358	129				384	255		
	Shimoga ...	Shimoga ...	1	Katakarkere ...	230	538	764	452	164	480	427½	492	708	360		
			2	Thirupalayan street ...	819	818	886	841	398	720	667½	912	1152	720		
			3	Mirzamaseed ...	458	384	624	1290	478	504	451½	600	576	900		
			4	Guttigudi ...	564	640	790	811	274	588	535½	600	840	600		
			5	Market No. 1 ...	658	752	592	363	204	744	691½	636	636	300		
			6	Do No. 2 ...	1033	1346	1222	1954	654	840	787½	960	1200	1560		
			7	Barbar street ...	514	562	672	579	168	576	523½	672	828	480		
			8	Seegehatti ..	368	362	352	448	142	468	415½	468	480	480		

			9	Anapinakatte ...	80	123	131	86	26							
			10	Devakatikoppa ...	72	78	75	69	42							
			11	Ramenakoppa ...	42	98	102	110	46							
			12	Maligenhalli ...	106	110	50	114	36	840	660	720	792	840		
			13	Gaujanur ...	223	333	352	334	132							
			14	Lakkenakoppa ...	145	173	173	152	60							
			15	Mattoor ...	208	218	211	189	60							
			16	Bi !are or Nidagi ...	62	55	83	14	..							
Bidare ...			17	Holebenavalli ...	98	88	122	108	40							
			18	Islapura ...	434	468	608	496	147							
			19	Dumhalli ...	136	123	139	172	58	1032	972	756	1020	924		
			20	Kudli ...	98	98	100	91	28							
			21	Goudanaikanahalli or Harobenavalli	52	26	56	482	22							
			22	Malenahalli	21	...	29	26	14							
			23	Holaloor ...	114	60	74	154	58							
Holaloor ...			24	Anaveri ...	125	70	41	108	21	144	276	180	180	180		
			25	Baunikere ...	118	54	58	90	44							
			26	Kunchenahalli ...	93	62	72	84	30							
Benkipur ...		Benkipura ...	27	Harogatta ...	256	311	281	231	42							
			28	Benkipur No. 1 ...	296	266·45	335	349	150							
			29	Do No. 2 ...	14	8[illegible]	20	512	104							
			30	Vadiyoor ..	72	136	121	52	10							
			31	Hiriyoor ...	172	80	50	139	45	1200	1032	1200	1200	1320	1—1—6 for mollasses arrack	1—4—6 for jaggory arrack
			32	Kamdal Hosur ...	92	74	87·11	[illegible]2	34							
			33	Jedikatte ..	64	60	78	152	48							
			34	Myadar Hosur ...	188	238	236	113	30							
			35	Anehalli ..	78	89	157	308	76							
Holehonnur ...			36	Holehonnur No. 1 .	188	166	245	207	68							
			37	Do No. 2 ...	188	177	42	183	43							
			38	Arahatalal Vaddar hatti.	4	...	...	78	24	528	636	612	408	564		
			39	Arabilachi ...	124	4[illegible]	76,30	139	2[illegible]							
			40	Nagatibelagal ...	115	8[illegible]	52	92	18							
Harnahalli ...		Ayanoor ...	41	Harnahalli ...	180	248	214	264	97							
			42	Konagavalli ...	103	79	4	124	48							
			43	Ayanoor ...	317	331	470	520	213							
			44	Sirigere ...	115	112	108	145	49							
			45	Kohalli ...	363	479	399	524	200	1200	1080	1560	1680	1824		
			46	Kumsi ...	64	169	202	21[illegible]	89							
			47	Dyavanakere ...	126	158	158	149	48							
			48	Chinamane ...	98	55	69	131	47							

Arrack Schedule for the year 1906-07—contd.

Total	Hobli	Name of Depot from with the shop are supplied	Serial No. of shops in each village or town	Name of village or town in which the shops is situated	Consumption in each shop					Rental of each shop or group of shops					Amount of gross profit allowed for retail vend per gallon of arrack	Remarks
					1901—02	1902—03	1903—04	1904—05	1905—06 for 5 months	1901—02	1902—03	1903—04	1904—05	1905—06		
1	2	3	4	5	6	7	8	9	10	11	12	13	14	15	16	17
					Gls.	Gls.	Gls.	Gls.	Gls.	Rs.	Rs.	Rs.	Rs.	Rs.	Rs. a. p.	
Honnali	Honnali ... Saswehalli ...	Honnali ...	1	Honnali ...	586	455	816	655	372				672	672	1—4—6 for Jaggery arrack	
			2	Cheeloor ...	174	25	71	87	40				60	84		
			3	Soratoor ...	73	76	82	143	35				66	48		
			6	Saswehalli ...	20	69	68	102	12				48	60		
			5	Govinkovi ...	85	62	106	110	30	1,392	1,290	1,200	36	66		
			7	Gonigere ...	38	36	35	117	24				24	24		
			4	Masti ...	55	28	38	134	24				48	48		
			8	Yereballi ...	55	31	76	67	53				36	42		
			9	Hunasgatta ...	74	54	13	58	17				12	24		
			10	Benakanahalli ...	26	32	...	...	..				12	...		
Nyamti	Nyamti and Belagutti ...	Nyamti ...	11	Nyamti ...	610	608	586	460	169					552	1—1—6 for Molasses arrack	
			12	Belagutti ...	125	136	132	141	65					132		
			13	Yeraganahal ...	61	10	40	74	48					54		
			14	Sowlanga ...	40	42	64	88	50					108		
			15	Salbaloo ...	96	6	103	93	42					66		
			16	Chinikatte ...	156	114	108	168	98	1,728	1,290	1,200	972	150		
			17	Vaderattur or Palavana halli ...	75	20	26	14	44					54		Transfered to Pala-vanti
			18	Doddettinahalli ...	265	165	95	108	116					48		
			19	Kottige ...	53	82	64	73	28					36		
			20	Sogalu ...	18	8	28	91	12				12	60		

Channagiri	Channagiri ...	Channagiri ...	1	Channagiri ...	327	292	305	270	103								
	Nallur ...		2	Nallur ...	168	142	82	86	35								
	Channagiri ...		3	Hodigere* ...	48	32	14	14	...								
	Santebennur ...		4	Devarahalli ..	78	88	68	76	36								
	Ubbarani ...		5	Tavarekere ..	53	32	26	56	34	870	720	660	600	62			
	Nallur ...		6	Doddagatta ...	114	117	102	96	48								
	Basavapatna ...		7	Kathalagere ..	68	57	50	68	15								
	Do ...		8	Basavapatna ...	102	42	17	27	30								
	Santebennur ..		9	Santebennur ..	44	56	22	22	12								
Shikarpur	Shikarpur ..	Shikarpur ...	1	Shikarpur, No. I. ...	433	425	296	701	374				828	720			
			2	Do No. II. ...	484	419	705	679	140				720	720			
			3	Kappanahalli ...	98	86	164	201	95				180	180			
			4	Easuru ...	188	158	196	328	98				192	192			
			5	Harogoppa ...	108	44	82	92	75				72	48			
			6	Hithla ..	88	71	105	92	36				60	54			
			7	Kittadahalli ...	...	12	24	30	16				12	12			
	Mugalgere ...		8	Salur ...	58	83	129	256	90				132	168			
			9	Hosur ...	30	18	18	78	82				12	18			
	Hosur ..		10	Balur ...	118	100	102	132	56				96	84			
	Udugani ...		11	Udugani ..	76	98	154	129	58				228	180			
			12	Shiralkoppa ...	586	651	831	722	279				1092	948			
			13	Manchikoppa ...	100	105	122	251	81	3228	2520	2472	240	180			
			14	Hirejambur ...	...	13	18	89	33				36	36			
			15	Adaganti ...	...	...	..	65	24				12	36			
			16	Bilki ...	...	20	36	99	37				24	24			
	Thalagunda ...		17	Thalagunda ..	131	62	126	55	26				132	96			
			18	Javagatte ..	45	99	114	59	40				180	120			
	Belandure ...	Sagar Depot ...	19	Thagarthi ..	187	196	212	205	73				192	180			
			20	Hosasante ...	192	180	197	195	76				240	192			
			21	Neechadi ...	84	72	96	108	39				72	96			
			22	Goza ...	58	61	80	98	48				132	78			
			23	Kannur ...	45	63	62	111	42				60	72			
Sorab	Sorab ...	Sorab Bonded Depot.	1	Sorab ...	667	624-50	816-41	875½	335				732	1056			
			2	Uddri ...	150	226	230	194	87				264	216			
			3	Chattradhalli ...	82	178	185	190	109				216	234			
	Ulavi ...		4	Ulavi ...	187	163	254	255	100			1200	312	336			
			5	Talkalkoppa ...	74	32	...	76	26				24	48			
	Chandragutti ...		6	Chandragutti ...	105	141	234	217	43				108	2 8			
	Kuppagaddi ...		7	Hechy ...	52	53	120	117	32				72	132			
			8	Kuppagaddi ...	...	42	77	81	20	2280	2544		72	84			

Rs. 1—1—6 per gallon for Molasses arrack
Rs. 1—4—6 for Jaggery arrack

*This shop was ordered to be closed at the time of sale last year

69

Arrack Schedule for the year 1906-07.

Taluk	Hobli	Name of Depot from which the shops are supplied	Serial No. of shops in each village or town	Name of village or town in which the shop is situated	Consumption in each shop					Rental of each shop or group of shops					Amount of gross profit allowed for retail vend per gallon of Arrack	Remarks
					1901—02	1902—03	1903—04	1904—05	1905—06 for 5 months	1901—02	1902—03	1903—04	1904—05	1905—06		
1	2	3	4	5	6	7	8	9	10	11	12	13	14	15	16	17
					Gals	Gals	Gals	Gals	Gals	Rs.	Rs.	Rs.	Rs.	Rs.	Rs. a. p.	
	Anavatti ...	Farmer's Depot Anavatti ...	9	Anavatti ...	420	431	474	595	175							
		Do ...	10	Hurali ...	64	100	93	67	33							
		Do ...	11	Here chowty ...	54	67	88	62	29							
		Do ..	12	Tattur ...	214	223	238	212	111	2280	2544	1212	1512	1956		
		Do ...	13	Here Idagodu ...	77	103	148	132	46							
	Chandragutti ...	Sorab Bonded Depot.	14	Bennur ...	45	64	62	77	27							
	Jady ...	Do ...	15	Telagaddy ...	32	34	55	71	27							
	Jady ...	Do ...	16	Jady ...	194	271	267	282	109							
Sagar	Sagar ...	Sagar Depot	1	Sagar Town, No. I ...	634	660	846	894	350	Rs. 4,032 0 0	Rs. 3,000 0 0	Rs. 3,000 0 0	576	1116	Rs. 1—1—6 per gallon for Molasses arrack Rs. 1—4—6 do Jaggery arrack.	
	Do ...		2	Sagar Town, No. II ...	678	732	641	794	316				840	996		
	Do ...		3	Sagar Town, No. III ...	520	580	495	577	209				720	672		
	Do ...		4	Lingadahalli ...	87	92	93	129	53				84	90		
	Avinahalli ...		5	Masur ...	109	164	219	263	130				186	228		
	Do ...		6	Mankalalay ...	182	178	185	145	86				264	156		
	Do ...		7	Avinahalli ...	183	143	153	154	83				192	162		
	Ananthapur ...		8	Gadikatte ...	102	102	105	115	78				96	108		
	Do ...		9	Kerekoppa ...	98	97	91	123	70				96	120		
			10	Kalasi ...	157	148	134	266	82				180	180		

Nagar	Ananthapur ...	Sagar Depot	11	Ananthapur ...	248	250	400	345	153				216	276	Including Jatra shops Rs. 30.
	Do ...		12	Havarkankoppa ...	41	99	91	117	54				84	84	
	Talaguppa ...		13	Siravanthe ...	166	173	199	223	99				204	198	
	Do ...		14	Talaguppa ...	180	201	208	212	94				180	192	
	Do ...		15	Hindlekoppa ...	81	118	122	117	67				90	102	
	Karur ...		16	Karur ...	150	108	120	124	59				72	78	
	Bharangi ...		17	Hamse ...	...	...	...	...	31				...	48	
	Pattuguppa ...	Kallurkatte ...	1	Kallurkatte ...	288	304	276	265	101	360			240	240	
	Do ...	Do ...	2	Honnaykoppa ...	21	47	117	120	40				36	96	
	Nagar ...	Do ...	3	Nagar ...	188	204	246	258	124				132	120	
	Do ...	Do ...	4	Raway ...	117	78	111	128	54	396	540		24	72	
	Do ...	Tirthahalli ...	5	Yedoor ...	187	129	218	229	90				108	162	
	Do ...	Kallurkatte ...	6	Hulikal ...	60	79	76	56	23				48	48	
	Kerehalli ...	Do ...	7	Doddinkoppa ...	98	129	103	116	76				108	132	
	Do ...	Do ...	8	Benawalli ...	130	130	141	185	88	384	276	960	108	120	
	Do ...	Do ...	9	Moogudthi ...	78	91	134	177	87				72	132	
	Do ...	Do ...	10	Kodoor ...	67	67	70	79	52				36	60	
	Jala ...	Do ...	11	Halavasalay ...	...	...	...	61	29	12	6		12	30	
	Humcha ...	Do ...	12	Humcha ...	70	40	111	99	44	150			48	66	
	Do ...	Do ...	13	Sonlay ...	68	74	81	104	45		126		36	60	
	Harithal ...	Do ...	14	Hebbylu ...	51	36	47	5	24	30			24	12	
	Do ...	Do ...	15	Harithal ...	25	8	10	17	10				12	12	
	Araga ...	Tirthahalli ..	1	Tirthahalli, No. 1 ...	326	246	660	610	223	...	...	...	624	540	Rs. 1—1—6 for Molasses Arrack.
	Do ...	Do ...	2	Do No. 2 ...	454	484	391	530	180	...	...	...	600	540	
	Do ...	Do ...	3	Do No. 3 ...	350	343	256	342	108	...	...	...	600	360	
	Do ...	Do ...	4	Araga ...	156	159	214	205	100	...	...	...	126	132	

Arrack Schedule for the year 1906-07—contd.

Total	Hobli	Name of Depot from with the shop are supplied	Serial No. of shops in each village town	Name of village or town in which the shops is situated	Consumption in each shop					Rental of each shop or group of shops					Amount of gross profit allowed for retail vend per gallon of arrack	Remarks
					1901—02	1902—03	1903—04	1904—05	1905—06 for 5 months	1901—02	1902—03	1903—04	1904—05	1905—06		
1	2	3	4	5	6	7	8	9	10	11	12	13	14	15	16	17
					Gals.	Gals.	Gals.	Gals.	Gals.	Rs.	Rs.	Rs.	Rs.	Rs.		
Tirthahalli	Agrahara ..	Tirthahalli	5	Ghujjingodige ...	155	143	129	153	79				132	138	Rs. 1—6—6 for Molasses arrack.	
			6	Nonaburu ...	183	198	221	205	92				180	150		
			7	Konundur ...	316	396	381	360	156				480	360		
			8	Humachakatte ...	247	264	170	207	89				300	204		
			9	Kelakoppa ...	182	172	203	167	59				120	120		
	Agumbe ..		10	Agumbe ...	112	109	114	151	61				72	72		
			11	Nalur ...	80	89	79	118	57				72	75		
			12	Megravalli ...	183	195	200	184	87				180	168		
			13	Kalmane ...	232	237	267	335	126				300	252		
			14	Chiplakatte ..	57	51	76	163	40				60	60		
			15	Tirthamuttur ...	84	90	112	97	30				72	96		
			16	Bilalakoppa ...	166	160	185	106	70	6012	4884	4800	120	132		
	Muthur ...		17	Kuruvalli ..	142	140	206	220	90				252	180		
			18	Melige ...	144	159	188	203	70				240	180		
			19	Siragani .	131	138	160	181	86				192	186		
			20	Jattinmakki ...	101	104	126	130	55				144	120		
			21	Shuntikatte ..	88	90	92	158	53				120	120		
			22	Harlimattu ...	156	181	149	198	81				168	192		
			23	Sedagar ...	61	78	101	127	42				120	114		

Tirthahalli	Mandagadde ...	Tirthahalli ...	24	Kukke ..	78	97	96	148	60				72	120		
			25	Kudumallige ...	206	184	166	140	98				252	156		
			26	Dhanasale ...	137	163	160	170	84				120	126		
			27	Malur ...	108	126	146	104	32				168	126		
			28	Begavalli ...	48	110	150	134	70				156	84		
			29	Nerlakoppa .	76	65	91	93	32				84	54		
			30	Mandagadde ...	...	238	238	254	101				264	216		
Chitaldrug	Chitaldrug ...	Chitaldrug ...	1	Chitaldrug ..	577	437	618	607	292					672		
	Do ..		2	Do ..	460	404	535	601	267					600		
	Turuvanur		3	Chikkondanahalli ...	50	25	29	49	16	1320	1440	1020	1020	24		
	Bharmasagar...		4	Sirigere ...	...	...	...	104	41					60		
	Do ...		5	Bharamasagar ...	...	...	...	..	35					48		
Jagalur	Jagalur ...	Chitaldrug ...	1	Jagalur ...	165	70	83	133	76	108	135	132	96	180		
	Bilichodu ...		2	Asagodu ...	52	22	12	36	..							
Challakere	Challakere ...	Challakere ..	1	Challakere ...	189	214	237	341	144					216		
	Parasurampur...		2	Parasurampur ...	42	41	56	79	33	518	300	16	216	24		
	Challakere ...		3	Mirsabihalli ..	38	50	48	76	24					24		
	Nayakanhatti...		4	Nayakanahatti ...	26	16	56	125	43					96		
Molakalmuru	Molakalmuru ...	Molakalmuru ...	1	Molakalmuru ...	291	242	254	293	200					312		
	Devasamudra ...		2	Muradi ...	10	71	90	49	40					72		
	Do ..		3	Devasamudra ...	77	91	113	82	46	960	840	732	582	96		
	Do ..		4	Rampura ...	40	58	50	54	36					48		
	Do ...		5	Chikkerahalli ...	40	40	28	36	18					24		
	Molakalmuru ...		6	Konasagara ...	22	22	18	36	22					12		
Hosdurga	Hosdurga ...	Holalkere ...	1	Hosdurga ...	180	137	132	101	63*							
	Boodihalu ..		2	Boodihalu ...												
				Bagur ..	..	..	4	..	28	...	101	90	90	51	For Molasses Arrack Rs. 1—1—6 For Jaggory Arrack Rs. 1—4—6	
				Balagur ...												

*Note.—This includes the quantity of liquor sold on market days at Balagur and Bagur.

73

Arrack Schedule for the year 1906—07.

Taluk	Hobli	Name of Depot from which the shops are supplied	Serial No. of shops in each village or town	Name of village or town in which the shop is situated	Consumption in each shop					Rental of each shop or group of shops					Amount of gross profit allowed for retail vend per gallon of arrack	Remarks
					1901—02	1902—03	1903—04	1904—05	1905—06 for 5 months	1901—02	1902—03	1903—04	1904—05	1905—06		
1	2	3	4	5	6	7	8	9	10	11	12	13	14	15	16	17
					Gals.	Gals.	Gals.	Gals.	Gals	Rs.	Rs.	Rs.	Rs.	Rs.	Rs. a. p.	
Hiriyur	Hiriyur ...	Hiriyur Depot	1	Hiriyur ..	89	133	163	375	178	1584	1680	1020	1383	1440	Rs. 1—1—6 per gallon for Molasses arrack Rs. 1—4—6 do Jaggory arrack	
	Aymangala ...		2	Aymangala ...	59	85	107	147	47							
	Hiriyur ...		3	Marikanve ...	698	896	1213	923	213							
	Do ...		4	*Madduruhalla ...	..	...	...	126	35							
	Do ...		5	Koonikere ...	.	..	103	186	80							
	Do ..		6	*Adivala ..	...	..	...	...	20							
	Do ...		7	*Alooru ...	...	..	...	26	...							
				Holalkere Taluk												
Holalkere	Holalkere .	Holalkere	1	Holalkere ...	222	216	148	266	87	405	345	310	144	204		
	Do ...		2	Arehallihatti ...	84	60	46	12	16				72	12		
	Barmanayakandurga .		3	Barmanayakandurga ...	126	64	52	48	18				24	24		
	Do ..		4	Chik Jajur ...	94	70	62	108	46				24	54		
	Ramagiri ..		5	Ramagiri ..	...	30	54	75	24				36	36		
				Davangere Taluk.												
Davangere	Davangere ...	Davangere	1	Davangere I ...	556	572	874	673	224	2292	2292	2160	2304	2064		
	Do ...		2	Do II ..	369	513	287	436	158							
	Mayakonda ...		3	Kodaganur ...	124	105	134	119	47							
	Do ..		4	Mayakonda ...	...	...	28	31	11							
	Hadhadi ...		5	Hadhadi ...	53	66	99	60	45							

* (Katrikenahalli to Maddrehalli
(Aldone to Adivala) } These two shops are temporarily transferred.

Davangere	Harihar ...		6	Harihar I ...	259	307	295	316	110	720	1080	1056	1056	900	1—1—6	
	Do ...		7	Do II .	231	334	37	314	128							
	Do ...		8	Harlapura ...	150	198	151	76	30							
	Do ...		9	Kunibelkere ...	39	44	35	76	26							
	Malebennur ...		10	Sirigere ...	49	36	45	74	28							
	Do ...		11	Malebennur ...	59	82	87	86	39							
				Mysore City shops.												
Mysore	Mysore City	Mysore	1	Lashkarmohalla ...	843	1104	1428	1382	532	912	600	792	876	960	Molasses Arrack Rs. 1—1—6	Jaggory Arrack Rs. 1—4—6
			2	Devarajamohalla ...	1193	1131	814	1002	1001	912	720	660	564	600		
			3	Mandimohalla (Ragimandi)	1226	1480	1099	1497	543	864	600	852	864	792		
			4	Devarajmohalla (Srirampet)	1509	2245	2326	2191	928	1332	1080	1200	1452	1572		
			5	Anetheru bidi (Srirampet)	2028	3296	1786	2000	1040	840	720	1080	1260	1152		
			6	Mandimohalla (Kurimandi)	1271	1856	2536	1801	1049	984	780	1128	1380	1116		
			7	Mandimohalla (Mochi bidi)	1553	1991	1845	2592	619	972	948	1200	1224	1200		
			8	Devarajmohalla (Savoy)	1156	699	623	533	210	996	600	648	504	720		
			9	Basavanamohalla (Kumbargeri)	1078	1686	2057	1671	655	1200	780	900	1104	1116		
			10	Lashkarmohalla ...	1771	1482	2040	2083	727	1224	972	1200	1248	1248		
			11	Devarajmohalla (Anetheru bidi)	2466	1791	3376	2972	1154	1140	1116	1200	1080	1140		
			12	Basavanamohalla (Kumbargeri)	1031	1426	1562	1460	494	732	660	852	948	1008		
			13	Devarajmohalla (Hosagrahar)	648	1110	1032	1048	569	468	360	720	648	636		
			14	Krishnarajmohalla (Hosagrahar)	1003	1566	1365	1244	411	696	600	732	900	852		
			15	Devarajmohalla (Anetheru bidi)	1302	1385	1144	2050	912	1068	816	816	732	792		
			16	Lashkarmohalla ..	699	869	927	932	482	372	396	456	516	600		
			17	Nazarbadmohalla ...	1184	1638	2090	1919	800	1260	864	1116	1452	1584		
			18	Krisnarajmohalla (Sunnadakeri)	1142	1443	1422	1198	526	840	624	852	1044	1044		
				Mysore Taluk shops.												
	Yelwal ...		1	Yelwal ...	82	54	88	62	22	7½	12	6	9½	5		
	Kudnahalli ...		2	Yedakola ...	132	120	118	72	22	13½	13½	9	9	7		

Arrack Schedule for the year 1906—07.

Taluk	Hobli	Name of Depot from which the shops are supplied	Serial No of shops in each village or town	Name of village or town in which the shop is situated	Consumption in each shop					Rental of each shop or group of shops					Amount of gross profit allowed for retail vend per gallon of Arrack	Remarks
					1901—02	1902—03	1903—04	1904—05	1905—06 for 5 months	1901—02	1902—03	1903—04	1904—05	1905—06		
1	2	3	4	5	6	7	8	9	10	11	12	13	14	15	16	17
					Gals.	Gals.	Gals.	Gals.	Gals.	Rs.	Rs.	Rs.	Re.	Rs.		
Yedatore	Yedatore ...	Yedatore ...	1	Yedatore ...	454	473	409	284	108	564	840	780	576	396	For Molasses ArrackRs. 1—1—6	
	Saligrama ...		2	Saligrama ...	101	53	80	161	63							
Hunsur	Hunsur ...	Hunsur ...	1	Hunsur Town ...	788	901	1136	1091	413	2400	2100	2520	936	1080		
	Do ...		2	Hunsur Town ...	612	848	947	887	261				816	1020		
	Do ...		3	Hunsur Bridge ...	636	728	788	652	300				636	888		
	Hanagodu ...		4	Hanagodu ...	63	4	...	83	32				84	36		
	Periyapatna ...		5	Periyapatna ...	340	449	379	330	127				444	372		
	Chilkunda ...		6	Kamplapura ...	105	105	147	125	36				132	96		
Heggaddevankote	Heggaddevankote	Heggaddevankote...	1	Heggaddevankote ...	250	337	285	223	95	450	330	408	216	222	For Jaggory Arrack 1—4—6	
	Saragur ...		2	Saragur ...	84	99	91	63	28				78	48		
	Antarsante ...		3	Antarsante ...	64	59	99	117	40				66	66		
	Malalu ...		4	Malalu ...	109	112	143	158	91				84	120		
Nanjangud	Nanjangud ...	Nanjangud ..	1	Nanjangud ...	1103	973	1028-6	1160—47½	425	1560	1944	1728	1200	1524		
Gundlupet.	Gundlupet ...		1	Gundlupet ...	503	479	521-39	517-1¾	243	420	420	600	816	696		
	Therakanambi...		2	Therakanamb ...	21	18	27	23-10	5							

Nagamangala	Nagamangala ..	Nagamangala ...	1	Nagamangala ...	291	262	320	264	115	504	480	432	432	438			
	Nelligere ...		2	Nelligere ...	133	78	84	58	24								
			3	Bellure ...	...	124	136	147	74								
	Honakere ...		4	Honakere ...	..		11	55	4								
T. Narsipur	T. Narsipur ...	T. Narsipur ...	1	T. Narsipur ...	350	450	475	435-8¼	179	300	276	312	336	360			
	Bannur ...		2	Bannur ...	470	480	493	326-11	119	300	440	492	516	492			
	Sosaley ..		3	Sosaley ...	101	133	188	153-46	47	60	72	60	66	84			
	Muguru ..		4	Mooguru ...	121	138	148	165-35¾	58	60	108	72	84	84			
	Talkad ..		5	Talkad ...	179	136	142	139-2	32	288	312	192	216	264			
			6	Kaliyuru ...	52	78	85	61-0	23								
Malavalli	Malavalli ...	Malavalli ...	1	Malavalli ...	360	528	408	368	143				564	432			
			2	Do ...	210	431	310	227	183				372	372			
			3	Belakavadi ...	308	247	276	121	31								
	Turigali ...		4	Hosathoddi ...	166	165	192	134	51	2652	2052	2424	1236	600			
			5	Sivansamudra ...	2100	443	903	501	76								
			6	Halaguru ...	185	276	177	132	95				252	168			
	Halagur ...		7	Kalamnathoddi ...	..	...	...	64	18				60	36			
	Arasinkere ...		8	Kalkuni ...	...	...	...	36	14				60	36			
	Kirgaval ..																
Seringapatam	Kura ..	Seringapatam ...	1	Seringapatam ...	975	839	916	810	378					876			
			2	Ganjam ..	690	672	635	592	213					576			
			3	French-Rocks ..	653	64	481	445	129					720			
	French-Rocks ..		4	Do ..	132	700	464	370	141	2832	2940	2748	2760	180			
			5	Kirangur ...	293	363	303	261	112					156			
	Kirangur ..		6	Palahalli ...	195	232	216	182	70					276			
	Palahalli ...		7	Melakote ...	283	223	212	229	126					72			
	Melakote ...		8	Arakere ...	134	106	72	164	82								
	Arakere ...																
Krishna-rajapet	Krishnarajapet...		1	Krishnarajapet ...	255	225	258	321	100	180	156	180	240	168			
	Kikere ..		2	Kikere ..	25	21	64	47	45								
	Kanambady ..		3	Bukinkere ...	31	17	6	29	2								
					—	—		—	—								

Jaggory arrack 1—4—6

Molasses arrack 1—1—6

Arrack Schedule for the year 1906-07—*concld.*

Taluk	Hobli	Name of Depot from which the shops are supplied	Serial No. of shops in each village or town	Name of village or town in which the shop is situated	Consumption in each shop					Rental of each shop or group of shops					Amount of gross profit allowed for retail vend per gallon of Arrack.	Remarks
					1901—02	1902—03	1903—04	1904—05	1905—06 for 5 months	1901—02	1902—03	1903—04	1904—05	1905—06		
1	2	3	4	5	6	7	8	9	10	11	12	13	14	15	16	17
					Gls.	Gls.	Gls.	Gls.	Gls.	Rs.	Rs.	Rs	Rs.	Rs.	Rs. a. p.	
Mandya	Mandya ...	Mandya ...	1	Mandya ...	576	488	634	449	236					540		
			2	Sathanoor ...	80	114	122	86	28					72		
	Koppa ...		3	Koppa ...	105	114	97	50	34	1560	1584	1668	1512	66		
	Maddur ...		4	Maddur ...	630	511	453	370	177					396		
	Basaral ...		5	Hallegere ...	...	...	66	56	16					54		
Chamarajanagar	Chamarajanagar	Chamarajanagar ...	1	Chamarajnagar ...	534	388	357	411	191							
	Santhe-Marahalli		2	Santhe-Marahalli ...	79	170	77	149	63	672	840	840	540	540	1—1—6	
			3	Honganur ...	58	40	51	27	9							
Yelandur	Yelandur ...	Chamarajanagar ...	1	Yelandur ...	241	200	207	186	78							
			2	Maddur ..	78	37	38	28	18	360	432	468	468	468		
	Agara ...		3	Mamballi ...	163	219	415	316	186							

SALE OF DRUG SHOPS FOR 1906-07.

Notice No. 2215, dated 21st March 1906.

1. Notice is hereby given that the exclusive privilege of selling intoxicating drugs in each of the shops specified in the schedule hereto appended, for the twelve months beginning with 1st July 1906 and ending with 30th June 1907, will be put up to public auction by the respective Deputy Commissioners or by Assistant Commissioners specially authorized by the Deputy Commissioners for the purpose, at the respective taluk or sub-taluk head-quarters, on the dates specified in the annexed statement, subject to the conditions hereinafter set forth.

2. Each bidder at the auction will deposit a sum of Rs. 5, or such other reasonable amount as may be fixed by the officer conducting the sale, previous to bidding, provided that the Government may at any time dispense with such initial deposit. Each shop will be knocked down to the approved highest bidder, subject to formal confirmation by the Deputy Commissioner, who will be at liberty to accept or reject the bid at discretion without assigning reasons for the same. Such formal confirmation will, *unless revised by Government*, be tantamount to an acceptance of the bid. Parties intending to bid must attend either in person or by duly accredited agents. No shop shall be knocked down in the name of more than one person or of more than one company or firm duly represented. The selling officer shall refuse to register as purchaser any one in whose name the bidding has not proceeded.

3. As soon as the auction is completed, the deposits made by the unsuccessful bidders and not forfeited as hereinafter provided, will be returned to them. As the auction proceeds, the person whose bid is acepted for each shop shall at once deposit a sum equal to $\frac{5}{8}$ths of a month's rent for that shop. Should he fail to do so, the deposit made by him under para 2 will be foreited, the shop will at once be put up again on the above conditions, and he will be debarred from bidding again for the same or for any other shop.

4. The persons to whom the shops have been knocked down, and who have made deposits as provided in paras 2 and 3, shall also be required to leave his address with the sale conducting officer in order that the confirmation of the sale may be communicated to that address by a notice, etc., and he shall, within 7 days, after the service of the said notice by its presentation to the purchaser or any adult male member in the place of the said address or by its being affixed thereto or by its forwardal duly registered by post, pay at the Taluk Treasury concerned such further sum as, with the first and second deposits, will make up an amount equal to two months' rent of each shop knocked down to them; and shall take out licenses and execute a counterpart engagement, in the prescribed forms, on the conditions hereinafter set forth. On the failure of any person to make the deposit or to take out license or to execute the counterpart engagement, as aforesaid, the shop will be re-sold at the risk of such person, or if the auction hereby notified has already been completed, will be otherwise disposed of at the discretion of the Deputy Commissioner. In the case of the purchaser's death after the confirmation of the sale, it will be binding on his heirs or assigns.

5. Re-sales effected under para 4 will be at the risk of the defaulting bidder, who will forfeit all gain; and in the event of a loss by re-sale or other disposal he will make good the deficiency between the total amount payable for the whole period under the terms of the original sale and the total amount payable by the successful bidder at the re-sale or other disposal. In the latter case, the forfeited deposit will be deducted from the loss arising from the re-sale and the remainder, if any, will be recovered from the bidder in the same manner as if it were an arrear of land revenue. Should, however, the forfeited deposit be greater than the loss by re-sale, the whole of such deposit will be credited to Government.

6. The license to be taken out under para 4 above, shall be subject to the following conditions, namely :—

(1) The amount for which the privilege has been purchased shall be payable into the Taluk Treasury on the prescribed challan in equal monthly instalments commencing from July 1906; each instalment shall be regarded as the rent for the month in respect of which it is payable.

Each month's rent shall be payable on or before the 20th of the same month on the challan prescribed for the purpose. If such amount be less than Rs. 12, it shall be paid up in not more than three quarterly instalments commencing from 1st July 1906. The deposit of two months' rent made by the licensee, will be taken in payment of the rents due for the last two months of the period of the license. Failing payment by the 20th of the same month or before the end of the quarter for which the instalment is due, the Amildar may, with the sanction of the Deputy Commissioner by record in writing, suspend or cancel the license or order the forfeiture of all deposits made by the defaulter and proceed to re-sell or otherwise dispose of the shop at the defaulter's risk (as soon after the last day of the month or quarter as may be possible) with effect from date of issue of license to the new purchaser or from the date of other disposal. No remission or abatement of the rent shall, on any account whatever, be claimable by the licensee.

(2) The licensee shall purchase Ganja and Majum from any Bonded Depot at the rates of Re. 0-13-4 and Re. 0-5-4, respectively, per seer of 80 tolas; and shall pay the price to the Mutsaddi in charge of the Depot.

(3) The rates payable as above, shall be in addition to Excise duty, which shall be prepaid into the Taluk Treasury, or into any other Government Treasury with the permission of the Deputy Commissioner, at Rs. 3-6-8 per seer of Ganja and Re. 0-11-8 per seer of Majum, (including local cess).

(4) The Ganja sold by the licensee, shall be of good quality and unadulterated, and it shall be sold by him at Rs. 10 for a seer of 80 tolas of Ganja or annas 2 per tola of Ganja and of Rs. 1-10-8 for a seer of Majum; and the whole stock of Ganja and Majum on hand shall be kept in the licensed shop and not elsewhere on any pretext whatever, without special permission.

(5) The licensee shall use such scales and weights as may from time to time be prescribed by Government, and provide himself with the printed forms of accounts and permits or passes for transport of Drugs, which forms shall be purchased from local Excise Officers.

(6) The licensee shall be bound to take over any Drugs which may remain as stock in hand belonging to the out-going licensee on the 1st July 1906 in the existing shop, paying to the latter such compensation for the same as may be fixed by the Deputy Commissioner.

(7) The licensee shall be bound by the rules in force, and by such further rules as may be issued from time to time by Government. He shall not during the term of his license, without the written permission of the Excise Commissioner, have any interest direct or indirect in any intoxicating drug shop outside the Mysore State or in the Civil and Military Station.

(8) No female shall be employed in the sale of intoxicating drugs.

(9) The remaining terms and conditions shall be as set forth in the prescribed license.

7. In the case of any breach of the above conditions either by the licensee, or with his connivance and privity, by any person in his employment, or in the event of the licensee neglecting to open his shop or to carry on his business with due care and attention, it shall be competent to the Deputy Commissioner to impose upon the licensee a fine not exceeding Rs. 10 for every such breach or neglect, or at the option of the Deputy Commissioner to declare the money deposited with him forfeited, and to cancel the license and to re-sell or to otherwise dispose of the privilege at the risk of the licensee; and all loss thereby caused, together with the loss accruing to Government in consequence of the licensee not carrying on his business by opening his shop on 1st July 1906, shall be made good by him. When a license is cancelled, the rent for the whole period of the license shall become due at once, which shall be recovered together with all losses as if they were arrears of land revenue.

8. The penalties laid down in the last preceding clause shall not exempt the licensee or his employees from prosecution for any offence committed against the Excise laws or rules in force.

81

DATES OF SALE.

District	Taluk	Date
Bangalore		May 1906
	Bangalore City and Bangalore Taluk ...	1 & 2
	Anekal	4
	Hoskote	8
	Devanhalli	10
	Dodballapur	12
	Nelamangala	14
	Magadi	16
	Channapatna	19
	Kankanhalli	21
Kolar		May 1906
	Goribidnur	3
	Bagepalli	7
	Chikballapur	9
	Sidlaghatta	11
	Chintamani	15
	Srinivaspur	17
	Mulbagal	19
	Kolar	21
	Malur	23
	Kolar Gold Fields*	25
	Bowringpet	26
Hassan		May 1906
	Belur	1
	Manjarabad	3
	Arkalgud	7
	Hole-Narsipur	9
	Hassan	11
	Channarayapatna...	14
	Arsikere	17
Kadur		May 1906
	Kadur	19
	Tarikere	21
	Yedahalli †	23
	Koppa	25
	Mudgere	28
	Chikmagalur	31

District	Taluk	Date
Tumkur		May 1906
	Kunigal	8
	Tumkur	10
	Gubbi	12
	Tiptur	16
	Chiknayakanhalli	19
	Sira	23
	Maddagiri	25
	Pavagada	28
Mysore		April 1906
	Yedatore	24
	Hunsur	26
	Heggaddevankote...	28
	Nanjangud	30
	Gundlupet	May 2
	Chamrajnagar	4
	Yelandur	7
	T.-Narsipur	9
	Malvalli	11
	Mandya	14
	Seringapatam	16
	Krishnarajpete	18
	Nagamangala	21
	Mysore City and Taluk	23
Shimoga		May 1906
	Shimoga	4
	Tirthahalli	8
	Nagar	10
	Sagar	12
	Sorab	14
	Shikarpur	16
	Honnali	18
	Channagiri	21
Chitaldrug		May 1906
	Hosdurga	8
	Holalkere	10
	Davangere	12
	Jagalur	15
	Molakalmuru	17
	Challakere	19
	Hiriyur	22
	Chitaldrug	25

* Gold Fields Magistrate's Court.

† Deputy Amildar's Office.

P. N. PURNAIYA,

Excise Commissioner in Mysore.

82

GANJA AND OPIUM SCHEDULE
FOR 1906-07

Taluk	Name of Hobli	Serial No. of shop	Locality of the Shop	Consump-							
				Ganja in seers of 80 tolas						Opium	
				1903-04		1904-05		1905-06 up to the end of November		1903-04	
1	2	3	4	5		6		7		8	
				S.	T.	S.	T.	S.	T.	S.	T.
	BANGALORE DISTRICT.										
Bangalore.	Bangalore City ...	1	Akkipet ...	135	0	27	0	15	0	21	24
	Do ...	2	Market Street ...	666	0	138	0	78	0	218	56
	Do ...	3	Kumbarpet ...	282	0	24	0	18	0	42	60
	Kengeri ...	1	Kengeri ...	5	0	4	0	2	40	...	
	Agara ...	2	Madivala ...	57	0	10	0	4	40	...	
	Begur ...	3	Begur ...	4	0	1	0	3	40	...	
	Yelahanka ..	4	Yelahanka ..	21	0	9	0	7	40	...	
	Krishnarajapura ...	5	Krishnarajapura ...	61	0	10	0	59	20	...	
	Varatoor ...	6	Varatoor ...	7	40	4	0	5	40	...	
Hoskote ..	Hoskote ...	1	Hoskote ...	109	0	30	40	9	0	17	56
	Kadgodi ...	2	Kadgodi ...	25	0	8	0	3	0	1	40
	Mugaloor ...	3	Devangundi ...	22	0	10	0	3	0	0	24
	Nandigudi ...	4	Nandigudi including Hindiganal Sante.	110	0	24	64	7	40	1	64
	Soolibele ...	5	Soolibele ...	11	40	6	53	3	0	0	72
Dodballapur.	Dodballapur ..	1	Dodballapur ...	66	0	39	0	18	0	4	40
	Rajaghatta ...	2	Melekote ...	27	0	13	40	6	0	...	
	Hulkunte ...	3	Dodbelavangala ...	22	0	13	40	7	40	...	
	Kodihalli ...	4	Kadanur ...	18	60	12	0	6	0	...	
	Kakolu ...	5	Kakolu ..	18	0	10	40	3	0	...	
Nelamangala	Nelamangala ...	1	Nelamangala ...	60	0	16	40	10	40	3	72
	Nijagal ...	2	Tyamagondal ...	40	40	18	0	3	0	3	72
	Do ...	3	Dobspete ...	7	40	...		3	0	...	
	Mailanahalli ..	4	Gollahalli ...	18	0	10	40	6	0	...	
	Begoor ...	5	Begoor ...	13	40	7	40	3	0	...	
Kankanhalli	Kankanhalli ...	1	Kankanhalli ...	142	40	74	0	29	0	18	40
	Harohalli ...	2	Harohalli ...	21	40	11	0	6	0	1	28
	Somanahalli ...	3	Inam Kagglipur ..	4	40	8	40	3	0	...	
Magadi ..	Magadi ...	1	Magadi ...	105	0	66	0	30	0	1	6
	Tavarekere ...	2	Tavarekere ...	16	0	7	0	6	0	..	
	Kudur ...	3	Kudur ...	50	0	19	40	7	40	...	
	Solur ...	4	Solur ...	..		12	0	3	0	...	
Channapatna.	Channapatna ...	1	Channapatna ...	120	0	71	40	33	60	30	0
Closepet.	Closepet ...	1	Closepet ...	111	0	42	0	18	0	19	64
Do ...	Bidadi ...	2	Bidadi ...	20	0	12	0	7	40	0	0
Anekal	Anekal ..	1	Anekal town including Chandapur sante ...	85	40	27	63	10	40	14	74

Schedule for 1906-07.

84

tion of—		Rental						Remarks
in seers of 80 tolas		Ganga			Opium			
1904-05	1905-06 up to the end of November	1903-04	1904-05	1905-06	1903-04	1904-05	1905-06	
9	10	11	12	13	14	15	16	17
S. T.	S. T.	Rs. a. p.	Rs. a. p.	Rs. a. p.	Rs. a. p.	Rs. a. p.	Rs. a.p.	
4 40	1 67	444 0 0	2,310 0 0	1,440 0 0	444 0 0	2,310 0 0	1,608 0 0	
125 8	30 42	780 0 0			780 0 0			
11 32	5 30	606 0 0			606 0 0			
..	..	36 0 0	90 0 0	30 0 0	...	...	...	
...	...	99 0 0	120 0 0	84 0 0	...	...	...	
...	...	24 0 0	36 0 0	12 0 0	...	...	...	
...	...	60 0 0	60 0 0	114 0 0	...	60 0 0	...	
...	...	60 0 0	108 0 0	72 0 0	...	108 0 0	...	
..	...	33 0 0	48 0 0	18 0 0	...	..	...	
9 60	4 40	63 0 0	165 0 0	156 0 0	63 0 0	165 0 0	57 0 0	
...	...	16 8 0	60 0 0	36 0 0	16 8 0	60 0 0	...	
...	...	18 0 0	49 8 0	36 0 0	18 0 0	49 8 0	..	
2 8	1 16	30 0 0	187 8 0	192 0 0	30 0 0	187 8 0	12 0 0	
1 16	0 72	13 8 0	33 0 0	30 0 0	13 8 0	33 0 0	12 0 0	
4 76	3 0	96 0 0	126 0 0	192 0 0	96 0 0	126 0 0	24 0 0	
...	...	54 0 0	54 0 0	36 0 0	...	...	...	
...	...	9 0 0	15 0 0	24 0 0	...	...	...	
...	...	33 0 0	33 0 0	24 0 0	...	...	...	
..	...	4 8 0	12 0 0	18 0 0	...	...	...	
3 48	1 40	20 4 0	55 8 0	90 0 0	20 4 0	55 8 0	24 0 0	
1 64	1 0	18 0 0	37 8 0	48 0 0	18 0 0	37 8 0	6 0 0	
...	...			12 0 0	...	...	...	
...	...	12 0 0	36 0 0	27 0 0	...	...	...	
..	...	4 8 0	13 8 0	12 0 0	...	...	...	
14 44	6 48	126 0 0	156 0 0	420 0 0	126 0 0	156 0 0	102 0 0	
1 52	0 72	12 0 0	27 0 0	30 0 0	12 0 0	27 0 0	18 0 0	
0 24	...	6 0 0	6 0 0	36 0 0	6 0 0	6 0 0	6 0 0	
3 11	1 16	42 0 0	180 0 0	420 0 0	42 0 0	180 0 0	24 0 0	
...	...	3 0 0	75 0 0		...	...	...	
...	...	15 0 0	180 0 0		...	...	...	
...	...	...	78 0 0		...	...	...	
29 56	13 40	120 0 0	276 0 0	360 0 0	120 0 0	276 0 0	192 0 0	
...								
...								
16 16	6 72	96 0 0	180 0 0	204 0 0	96 0 0	180 0 0	60 0 0	
...	...	12 0 0	36 0 0	18 0 0	...	...	...	
7 16	3 48	73 8 0	120 0 0	129 0 0	73 8 0	120 0 0	39 0 0	

Taluk	Hobli	Serial No. of shop	Locality of the shop	Consumption: Ganja (in seers of 80 tolas) 1903-04		1904-05		1905-06 up to the end of November		Opium 1903-04	
1	2	3	4	5		6		7		8	
				S.	T.	S.	T.	S.	T.	S.	T.
	Jigani ...	2	Jigani including Hennagara, Banneraghatta and Begenahalli sante and jatras.	10	40	3	2	1	40	0	0
	Sarjapur ...	3	Sarjapura ..	53	0	10	0	5	40	0	72
		4	Dommasandra including Huskur sante and jatra.	40	0	10	0	7	0	2	8
	Athibele ...	5	Athibele ..	61	0	12	55	5	40	1	40
Devanahalli.	Devanahalli ...	1	Devanahalli ...	68	0	40	0	19	0	1	64
	Vadigenahalli ...	2	Vadigenahalli ...	53	40	26	0	10	0	0	48
	Budigere ...	3	Budigere ...	37	0	12	40	6	0	0	0
	KOLAR DISTRICT										
	KOLAR GOLD FIELDS SHOPS.										
Bowringpet.	Dasarahosahalli ...	1	Robertsonpet ...	..		..		53	40	0	0
	Do ...	2	Oorigaum ...	315	0	344	0	77	0	68	0
	Do ...	3	Marikuppam * ...	277	0	136	0	43	0	63	0
	BOWRINGPET TALUK SHOPS.										
Bowringpet	Bowringpet ...	4	Bowringpet ...	243	0	148	40	47	40	57	0
	Bethamungala ...	5	Bethamangala ..	158	0	64	0	13	0	18	0
Malur	Malur ...	1	Malur ...	177	0	93	0	28	40	57	0
	Lakkoor ...	2	Thirupathi or Lakkur.	24	0	27	0	10	40	68	0
	Narasapoor ...	3	Thornahalli	18	0	9	0	3	0	63	0
	Narasapoor ...	4	Narasapoor ..	33	0	25	40	7	40	18	0
Chickballapur.	Chickballapur ...	1	Chickballapur ...	190	0	96	0	39	0	35	36
Sidlaghatta	Sidlaghatta ...	1	Sidlaghatta ...	65	40	76	0	27	0	4	42¾
Do ..	Jangamkote ...	2	Jangamkote ...	15	0	2	40	6	0	...	
Do ..	Chilakalnerpu ...	3	Burdugunte ...	40	40	10	40	10	40	...	
Kolar ..	Kolar ...	1	Kolar Town ..	218	0	115	40	39	0	48	0
	Vemgal ...	2	Kyalanur ...	3	0	33	0	9	0	0	72
	Vockkalari ...	3	Vickkalari ...	14	0	22	0	8	40	...	
Mulabagal.	Mulbagal ..	1	Mulabagal ...	106	40	31	40	18	0	30	0
	Avani ...	2	Kothamangala ...	51	0	10	40	12	0	...	
	Byrakur ..	3	Nangali ...	52	40	30	40	12	0	...	
	Mallinaicanahalli ...	4	Tailur ...	39	0	37	40	7	40	...	
Bagepalli.	Bagepalli ...	1	Bagepalli (including Yellampalli Santhe)	60	0	22	0	7	40	2	48
	Gudibanda ..	2	Gudibanda ...	41	0	9	0	4	0	...	
	Pathapalya ..	3	Pathapalya (including Belloor Santhe)	24	40	15	0	9	0	...	
	Chelur ...	4	Chelur ...	28	40	12	40	4	40	..	

Schedule for 1906-07.

86

tion of —		Rental						Remarks
(in seers of 80 tolas)		Ganja			Opium			
1904-05	1905-06 up to the end of November	1903-04	1904-05	1905-06	1903-04	1904-05	1905-06	
9	10	11	12	13	14	15	16	17
S. T.	S. T.	Rs. a. p.	Rs. a. p.	Rs. a. p.	Rs. a. p.	Rs. a. p.	Rs. a. p.	
0 0	...	24 0 0	14 4 0	12 0 0	...	14 4 0	...	
0 69	0 51	22 8 0	13 8 0	21 0 0	22 8 0	13 8 0	12 0 0	
1 22	0 48	18 0 0	12 0 0	12 0 0	18 0 0	12 0 0	6 0 0	
0 60	2 64	45 0 0	18 0 0	12 0 0	45 0 0	18 0 0	6 0 0	
3 0	0 48	36 0 0	90 0 0	198 0 0	36 0 0	90 0 0	21 0 0	
0 24	0 48	17 4 0	63 0 0	168 0 0	17 4 0	63 0 0	4 14 0	
...	...	18 0 0	24 0 0	18 0 0	..	...	...	
0 0	18 34	...	...	1041 0 0	...	..	600 0 0	* The sanitary and mining Boards want this shop to be removed to stephens camp. That place may be mentioned as the site for the new shop.
89 44	29 8	720 0 0	1,500 0 0	960 0 0	720 0 0	1500 0 0	972 0 0	
44 32	13 16	420 0 0	660 0 0	660 0 0	420 0 0	660 0 0	600 0 0	
58 16	20 8	348 0 0	750 0 0	480 0 0	348 0 0	750 0 0	540 0 0	
14 8	3 72	60 0 0	480 0 0	180 0 0	60 0 0	480 0 0	180 0 0	
7 50	3 0	156 0 0	216 0 0	264 0 0	156 0 0	216 0 0	96 0 0	
...	...	132 0 0	66 0 0	114 0 0	...	...	...	
...	...	9 0 0	27 0 0	84 0 0	...	...	...	
...	...	30 0 0	30 0 0	144 0 0	...	...	...	
32 36	14 22	156 0 0	276 0 0	504 0 0	156 0 0	276 0 0	312 0 0	
6 37	3 54	72 0 0	177 0 0	216 0 0	72 0 0	177 0 0	21 0 0	
...	...	12 0 0		24 0 0	12 0 0		...	
..	...	75 0 0		54 0 0	...		...	
40 40	16 40	306 0 0	708 0 0	564 0 0	306 0 0	708 0 0	240 0 0	
3 48	1 40	54 0 0	36 0 0	72 0 0	54 0 0	36 0 0	24 0 0	
..	...	48 0 0	60 0 0	72 0 0	48 0 0	60 0 0	..	
16 23	9 24	108 0 0	192 0 0	122 0 0	108 0 0	192 0 0	108 0 0	
...	...	66 0 0	66 0 0	78 0 0	...	...	...	
...	...	48 0 0	120 0 0	84 0 0	...	...	..	
...	...	42 0 0	42 0 0	24 0 0	...	...	...	
3 48	1 11	21 0 0	66 0 0	54 0 0	21 0 0	66 0 0	36 0 0	
...	...	12 0 0	66 0 0	24 0 0	...	...	...	
...	...	12 0 0	24 0 0	36 0 0	...	..	...	
..	...	12 0 0	30 0 0	36 0 0	..	...	...	

Taluk	Hobli	Serial No. of shop	Locality of the shop	Consump-							
				Ganja in seers of 80 tolas						Opium	
				1903—04		1904—05		1905—06 up to the end of November		1903—04	
1	2	3	4	5		6		7		8	
				S.	T.	S.	T.	S.	T.	S.	T.
Chintamani.	Chintamani ...	1	Chintamani ..	152	0	88	0	41	40	13	73
Srinivasapur.	Srinivasapur ..	1	Srinivasapur ...	175	0	90	0	39	40	11	63
Goribidnur.	Goribidnur ...	1	Goribidnur ...	55	40	22	40	9	0	6	6
Do ...	Thondebhavi ...	2	Thondebhavi ...	30	0	18	0	6	0	..	
Do ...	Hossur ...	3	Hossur ...	9	0	9	0	3	0	...	
Do ..	Manchenahalli ...	4	Manchenahalli ..	30	0	10	40	4	40	...	
	TUMKUR DISTRICT.										
Tumkur.	Tumkur ...	1	Tumkur ...	203	0	133	40	54	0	20	14
	Ooradigere ...	2	Kyatsandra ...	24	0	15	0	10	40	..	
	Gooloor ...	3	Hounudikey ..	21	0	9	0	6	0	...	
	Hebboor ..	4	Hebboor ...	24	0	21	0	10	40	...	
	Bellavi ...	5	Bellavi ...	15	0	12	0	6	0	...	
	Kora ..	6	Kestoor ..	16	4	16	40	4	40	...	
Maddagiri.	Maddagiri ...	1	Maddagiri ...	75	60	30	40	10	40	2	16
	Kodiganahalli ...	2	Kodiganahalli ...	...		4	40	1	40	...	
Koratagere	Koratagere ...	3	Koratagere ...	55	56	23	0	8	0	1	35
Chiknayakanhalli.	Chiknayakanhalli ...	1	Chiknayakanhalli ...	155	40	59	0	10	0	2	4
	Huliyar ...	2	Huliyar ...	82	64	38	0	15	0	0	60
	Do ...	3	Bellara ...	...		2	0	8	0	80	0
Sira ...	Sira ...	1	Sira ...	70	40	51	0	22	40	4	16
	Kallamballa ...	2	Halanahally ..	25	40	13	40	6	0	...	
	Nadoor ...	3	Patnaikanahalli ...	30	0	27	0	13	40	...	
	Hulikunte ...	4	Chiratahalli ...	3	0	1	40	...		...	
	Bukkapatna ...	5	Bukkapatna ...	13	40	7	40	4	40	...	
Gubbi .	Gubbi ..	1	Gubbi ...	54	0	43	40	18	0	7	0
	Nittur ...	2	Nittur ...	7	40	6	0	6	0	...	
	Kallur ...	3	Kallur ..	43	40	42	0	9	0	...	
	Kadaba ...	4	Kadaba ...	19	40	9	0	6	0	...	
	Nittur ...	5	Mooganaikankote ...	16	40	7	40	6	0	...	
	Chelur ...	6	Chelur ...	27	0	24	0	9	0	...	
	Hagalwadi ...	7	Hagalwadi ...	6	0	7	40	6	0	...	

tion of—		Rental						
in seers of 80 tolas		Ganja			Opium			Remarks
1904—05	1905—06 up to the end of 3 November	1903—04	1904—05	1905—06	1903—04	1904—05	1905—06	
9	10	11	12	13	14	15	16	17
S. T.	S. T.	Rs. as. p.	Rs. as. p.	Rs. as. p.	Rs. as. p.	Rs. as. p.	Rs. as. p.	
18 52	14 55	126 0 0	270 0 0	324 0 0	126 0 0	270 0 0	120 0 0	
12 18	3 34	87 0 0	312 0 0	348 0 0	87 0 0	312 0 0	60 0 0	
5 38	2 32	..	...	...				
...	...	27 0 0	91 8 0	192 0 0	27 0 0	91 8 0	54 0 0	
...	...	...	...	..				
...	...	9 0 0	63 0 0					
20 73	9 20			564 0 0	120 0 0	120 0 0	156 0 0	
...	...			30 0 0	...	...	...	
..	...	216 0 0	648 0 0	12 0 0	..	...	..	
...	..			24 0 0	..	...	...	
...	..			12 0 0	..	...	...	
...	...			30 0 0	...	...	...	
3 52½	1 5¾	54 0 0	118 0 0	156 0 0	4 0 0	5 0 0	12 0 0	
...	...	..	6 0 0	6 0 0	...	...	...	
1 24½	0 44	50 0 0	132 0 0	114 0 0	1 0 0	12 0 0	6 0 0	
3 0	0 48	132 0 0	498 0 0	240 0 0	18 0 0	18 0 0	24 0 0	
0 60	0 24	30 0 0	174 0 0	114 0 0	6 0 0	6 0 0	6 0 0	
..	...	...	10 8 0	15 0 0	...	1 8 0	...	
5 37	1 45				15 0 0	18 0 0	87 0 0	
		80 0 0	228 0 0	276 0 0				
12 0	1 58		180 0 0	180 0 0	24 0 0	30 0 0	30 0 0	
			12 0 0	12 0 0				
			48 0 0	78 0 0				
		139 0 0	51 0 0	36 0 0				
			36 0 0	18 0 0				
			36 0 0	36 0 0				
			27 0 0	12 0 0				

Taluk	Name of Hobli	Serial No of shop	Locality of the shop	Consumption			
				Ganja in seers of 80 tolas			Opium
				1903—04	1904—05	1905—06 up to the end of November	1903—04
1	2	3	4	5	6	7	8
				S. T.	S. T.	S. T.	S. T.
Tiptur ...	Tiptur ...	1	Tiptur ...	135 0	76 40	42 0	8 18
	Nonavinkere ...	2	Nonavinkere ...	16 40	7 40	7 0	...
	Honnavalli ...	3	Honnavalli ...	22 40	24 0	7 40	...
	Kibbanhalli ...	4	Bansandra ...	...	13 40	9 0	...
	Turuvekere ...	5	Turuvekere ...	52 40	33 0	13 40	...
	Mayasandra ...	6	Mayasandra ...	18 40	4 40	7 40	...
Pavagada.	Pavagada ...	1	Pavagada ...	17 54	10 40	6 0	2 38
	Hoskote ..	2	Hoskote ...	4 40	6 0	1 40	...
Kunigal.	Kunigal ...	1	Kunigal ...	84 20	48 0	21 10	33 75¾
	Huliyurdurga ...	2	Huliyurdurga ...	10 40	13 40	6 0	...
	HASSAN DISTRICT.						
Hassan ..	Hassan ..	1	Hassan ...	122 0	51 0	26 0	14 32
	Alur ...	2	Alur ...	32 0	12 0	4 0	5 4
	Kattaya ...	3	Gorur ...	29 0	10 40	4 40	...
	Grama ...	4	Grama ...	...	8 0	4 0	...
Manjarabad ...	Saklespur ...	1	Saklespur ..	69 40	26 40	13 40	58 10
	Belagodu ..	2	Belagodu ...	35 60	24 0	10 40	6 19
	K. Hosakote ...	3	Shukkaravana Santhe	38 0	11 0	6 0	1 0
	Yeslur ...	4	Yeslur ..	6 44	4 0	1 40	2 4½
	Hanabalu ...	5	Hadige Pete .	7 20	4 40	1 40	...
Belur ..	Belur ..	1	Belur ...	103 40	66 0	18 0	4 64
	...	2	Gendehally ...	47 0	3 0	7 40	...
	Bikkodu ...	3	Bikkodu ..	..	1 40	9 0	..
Arasikere.	Arasikere ...	1	Arasikere ...	98 47	47 50	24 13	10 1½
	Banavar ...	2	Banavar ...	60 6	35 10	16 24	4 25
	Arasikere ...	3	Harnahalli ...	55 56	44 50	18 19	0 51½
Chennarayapatna..	Chennarayapatna ...	1	Chennarayapatna .	53 0	32 8½	11 17½	2 31½
	Sravana Belagula ..	2	Sravana Belagula ..	21 0	11 64	5 36	0 40
	Anati ..	3	Navile ...	16 0	21 0	3 16	...
	Nuggihalli ...	4	Nuggihalli ...	...	..	10 15	...
Hole Narsipur ...	Hole Narsipur ...	1	Hole Narasipur ...	55 40	28 0	16 0	4 64
	KADUR DISTRICT.						
Arkalgud..	Arkalgud .	1	Arkalgud ...	25 40	15 0	9 0	5 6½
Tarikere ..	Tarikere ..	1	Tarikere ..	153 0	58 0	22 40	24 70
	Ajjampur ..	2	Ajjampur ...	13 0	19 0	7 40	...
	Lingadahalli ..	3	Lingadahalli	17 40	19 40	9 0	...
	Lakkavalli ...	4	Lakkavalli ..	25 40	28 40	4 40	...
Koppa ...	Koppa ..	1	Keppa ...	39 40	27 0	10 40	6 12
		2	Hariharpura ...	24 0	20 0	4 40	2 0
	Baggunje ...	3	Sollebile ...	25 0	15 0	4 0	...
	Kigga ...	4	Kigga ...	7 40	3 0	1 40	..
	Sringeri ...	5	Sringeri ...	58 40	33 0	10 40	7 0
	Sringari ...	6	Kurcheybile ...	4 40	...	...	

tion of—		Rental						Remarks
(in seers of 80 tolas)		Ganja			Opium			
1904—05	1905—06 up to the end of November	1903—04	1904—05	1905—06	1903—04	1904—05	1905—06	
9	10	11	12	13	14	15	16	17
S. T.	S. T.	Rs. a. p.	Rs. a. p.	Rs. a. p.	Rs. a. p.	Rs. a. p.	Rs. a. p.	
12 16	6	A 234 0 0	372 0 0	372 0 0		60 0 0	60 0 0	A. Rental of opium shop is merged in Ganja rental for 1903-1904.
		48 0 0	48 0 0	54 0 0				
		12 0 0	42 0 0	60 0 0				
		9 0 0	48 0 0	27 0 0				
		30 0 0	108 0 0	96 0 0				
		12 0 0	36 0 0	24 0 0				
4 50¾	1 30¾	24 0 0	54 0 0	51 12 0	6 0 0	6 0 0	6 0 0	
...	...	...	...	6 0 0	...	...	...	
25 0	3 37	108 0 0	240 0 0	204 0 0	36 0 0	36 0 0	36 0 0	
...	...	9 4 0	12 0 0	12 0 0	...	...	..	...
12 0	5 32	120 0 0	426 0 0	120 0 0	120 0 0	96 0 0	54 0 0	
4 16	1 40	21 0 0	54 0 0	60 0 0	21 0 0	6 0 0	6 0 0	
...	...	36 0 0	18 0 0	12 0 0	3 0 0	...	...	
..	...	...	12 0 0	9 9 0	...	...	...	
66 30	23 38	138 0 0	144 0 0	192 0 0	138 0 0	72 0 0	84 0 0	
1 30	0 36	6 0 0	84 0 0	15 0 0	6 0 0	18 0 0	15 0 0	
0 40	0 44	12 0 0	24 0 0	18 0 0	12 0 0	12 0 0	12 0 0	
1 17¾	0 44¼	3 0 0	6 0 0	7 8 0	3 0 0	6 0 0	6 0 0	
...	...	6 0 0	6 0 0	6 0 0	6 0 0	6 0 0	—	
6 70	3 48	} 67 8 0	180 0 0	156 0 0	...	18 0 0	36 0 0	
...	...		90 0 0	78 0 0	...	...	...	
...	...		6 0 0	6 0 0	...	...	...	
8 20½	4 4	54 0 0	288 0 0	240 0 0	54 0 0	66 0 0	66 0 0	
5 26	2 27	36 0 0	120 0 0	144 0 0	36 0 0	12 0 0	18 0 0	
0 3	..	27 0 0	156 0 0	168 0 0	27 0 0	6 0 0	12 0 0	
3 36	1 0	24 0 0	69 0 0	84 0 0	24 0 0	12 0 0	30 0 0	
0 23	0 13	3 0 0	48 0 0	21 0 0	3 0 0	3 0 0	3 0 0	
0 24	...	4 6 0	18 0 0	12 0 0	4 6 0	3 0 0	3 0 0	
...	...	...	...	24 0 0	...	..	...	
5 79	2 8	36 0 0	66 0 0	66 0 0	36 0 0	12 0 0	12 0 0	
2 78	1 16	12 0 0	33 0 0	51 0 0	12 0 0	18 0 0	7 0 0	
24 48	8 45	144 0 0	540 0 0	360 0 0	141 0 0	144 0 0	153 0 0	
...	...	12 0 0	21 0 0	24 0 0	...	...	...	
...	...	13 8 0	36 0 0	36 0 0	...	...	...	
..	...	6 0 0	24 0 0	84 0 0	...	..	...	
11 9	4 0	30 0 0	156 0 0	126 0 0	30 0 0	18 0 0	18 0 0	
...	...	6 0 0	36 0 0	27 0 0	6 0 0	...	..	
...	...	3 0 0	48 0 0	33 0 0	3 0 0	...	...	
..	..	3 0 0	12 0 0	9 0 0	3 0 0	...	...	
9 0	2 0	36 0 0	162 0 0	144 0 0	36 0 0	6 0 0	6 0 0	
	...	6 0 0	...	...	...	—	....	
...								

Taluk	Name of Hobli	Serial No. of shop	Locality of the shop	Consump							
				Ganja (in seers of 80 tolas)						Opium	
				1903—04		1904—05		1905—06 up to the end of November		1903—04	
1	2	3	4	5		6		7		8	
				S.	T.	S.	T.	S.	T.	S.	T.
Yedehally.	Yedehally ..	1	Yedahally ..	40	0	27	0	16	0	17	0
Yedehalli.	Balehonur ...	1	Balehonur ...	20	0	35	0	12	0	9	0
Chikmagalur .	Chikmagalur ...	1 2	Chikmagalur Do	231	0	107	0	50	0	39	67
	Aldur ...	3	Aldur ..	57	0	18	0	12	0	13	16
		4	Machagondanahalli .	22	0	8	0	8	0	72	4
	Jagara ...	5	Hospete ...	..		4	0	...		...	
		6	Dattatripeeta ..	...		...		...		...	
Kadur ...	Kadur ...	1	Kadur ...	64	40	45	0	15	0	3	50
	Birur ..	2	Birur .	84	0	57	0	20	20	2	68½
	Sakrepatna ...	3	Sakrepatna ..	..		...		7	40	...	
Mudigere.	Mudigere ...	1	Muddigere .	78	0	51	0	15	0	8	8
	Kalasa ...	2	Kalasa ...	14	0	14	0	4	0	...	
	SHIMOGA DISTRICT.										
Shimoga ..	Shimoga ...	1	Shimoga ...	585	0	251	30	102	0	22	60⅜
	Benkepura ...	2	Benkepura ...	115	50	70	0	19	0	8	13½
	Holehonnur ...	3	Holehonnur ...	44	0	35	40	8	0	0	34
	Kumsi ...	4	Kumsi ...	14	40	2	0	7	40	...	
	Harnahalli ...	5	Ayanoor ...	58	0	18	0	4	0	...	
		6	Harnahalli ...	0	1	1	0	1	40	...	
Honnali...	Honnali ...	1	Honnali ...	106	0	23	75	7	40	14	32
	...	2	Chiloor ...	16	40	3	0	1	40	...	
	Balaguthi ..	3	Belaguthi ..	13	40	13	40	4	40	...	
		4	Namthi ...	71	20	24	31	4	40	1	8
		5	Chanaketta ...	12	0	19	40	4	40	...	
	Sasvahalli ..	6	Sasvahalli ..	27	0	12	0	1	40	..	
		7	Hunasagutte ...	...		4	40	1	40	...	
		8	Kundoor ...	16	40	4	40	1	40	..	
Chennagiri ...	Chennagiri ...	1	Chennagiri ...	57	0	22	40	9	0	50	0
Chennagiri ...	Basavapatna ..	1	Thyavannige ...	82	0	13	40	4	40	50	0
Shikarpur	Shikarpur ...	1	Shikarpur ..	130	40	54	0	27	0	3	57½
	Udagani ...	2	Sihralakoppa ...	124	40	44	0	15	0	2	57½
	Belandur ...	3	Hosasanthe ...	43	40	18	40	9	0	..	
Sorab ..	Sorab ..	1	Sorab ...	72	75	29	40	12	12	2	27
		2	Udri ...	16	40	6	40	3	0		
	Ulavi ...	3	Ulavi ...	...		17	0	9	0	...	
	Anavatti ...	4	Anavatti ...	28	40	13	40	6	0		
		5	Kerihalli ..	...		2	0	...		...	
	Jadi ...	6	Jady ..	...		4	40	1	0	...	

for 1906-07.

92

tion of—		Rental						Remarks
(in seers of 80 tolas)		Ganja			Opium			
1904—05	1905—06 up to the end of November	1903—04	1904—05	1905—06	1903—04	1904—05	1905—06	
9	10	11	12	13	14	15	16	17
S. T.	S. T.	Rs. a. p.	Rs. a. p.	Rs. a. p.	Rs. a. p.	Rs. a. p.	Rs. a. p	
14 0	11 0	43 8 0	162 0 0	108 0 0	43 8 0	12 0 0	12 0 0	
7 0	3 0	6 0 0	15 0 0	36 0 0	6 0 0	6 0 0	12 0 0	
39 72	17 32	300 0 0	768 0 0	456 0 0	300 0 0	264 0 0	168 0 0	
11 32	6 48	48 0 0	144 0 0	156 0 0	48 0 0	96 0 0	96 0 0	
4 61	..	12 0 0	60 0 0	36 0 0	12 0 0	48 0 0	...	
...	..	3 0 0	3 0 0	...	3 0 0	3 0 0	...	
...	...	3 0 0	3 0 0	...	3 0 0	3 0 0	..	
3 69	1 26½	14 4 0	60 0 0	144 0 0	14 4 0	18 0 0	18 0	
2 74	1 64½	33 0 0	96 0 0	132 0 0	33 0 0	12 0 0	12 0 0	
...	...	...	...	14 4 0	..	...	...	
8 4	3 50	60 12 0	168 0 0	171 0 0	60 12 0	30 0 0	30 0 0	
...	...	3 0 0	24 0 0	12 0 0	3 0 0	..	...	
26 43⅝	11 52	216 0 0	612 0 0	960 0 0	216 0 0	612 0 0	240 0 0	
6 47¾	2 59¼	72 0 0	150 0 0	180 0 0	72 0 0	150 0 0	48 0 0	
1 6½	0 8½	48 0 0	66 0 0	96 0 0	48 0 0	66 0 0	15 0 0	
...	..	12 0 0	24 0 0	24 0 0	...	...	..	
..	..	30 0 0	156 0 0	120 0 0	...	...	..	
...	...	..	24 0 0	36 0 0	...	...	...	
14 22	6 29	60 0 0	135 0 0	120 0 0	60 0 0	135 0 0	54 0 0	
...	...	2 12 0	48 0 0	12 0 0	...	...	..	
...	...	1 8 0	51 0 0	27 0 0	...	...	..	
1 63	0 33	15 0 0	90 0 0	90 0 0	15 0 0	90 0 0	21 0 0	
...	...	3 0 0	24 0 0	30 0 0	...	...	..	
...	...	3 0 0	39 0 0	24 0 0	..	...	...	
...	...	3 0 0	12 0 0	9 0 0	...	...	..	
...	...	...	18 0 0	9 0	...	...	...	
0 48	..	36 0 0	60 0 0	63 0 0	...	60 0 0	3 0 0	
0 24	...	102 0 0	81 0 0	78 0 0	...	81 0 0	3 0 0	
3 58	1 34	54 0 0	180 0 0	240 0 0	54 0 0	180 0 0	30 0 0	
2 32	1 11	57 0 0	168 0 0	168 0 0	57 0 0	168 0 0	60 0 0	
...	...	24 12 0	64 8 0	72 0 0	...	...	...	
2 12	0 71	48 0 0	120 0 0	120 0 0	2 4 0	24 0 0	18 0 0	
...	...	6 0 0	18 0 0	18 0 0	...	...	...	
...	...	..	18 0 0	72 0 0	..	...	...	
...	...	18 0 0	51 0 0	48 0 0	...	...	...	
..	...	1 8 0	3 0 0	3 0 0	...	...	..	
...	..	9 0 0	12 0 0	12 0 0	..	..	...	

93

Ganja and Opium Schedule

Taluk	Name of Hobli	Serial No. of shop	Locality of the shop	Consump Ganja (in seers of 80 tolas) 1903-04		1904-05		1905—06 up to the end of November		Opium 1903—04	
1	2	3	4	5		6		7		8	
				S.	T.	S.	T.	S.	T.	S.	T.
Sagar ...	Sagar ...	1	Sagar Town ...	159	40	81	0	22	40	8	15
	Do ..	2	Masuru ...	43	40	7	40	4	40	..	
	Avinahalli ...	3	Avinahalli ...	28	40	9	0	4	40	..	
	Ananthapur ...	4	Ananthapur ...	49	0	21	0	10	40	...	
	Talaguppa ...	5	Talaguppa ...	34	40	7	40	4	40	..	
	Do ..	6	Siravanthe ...	27	0	12	0	4	40	...	
	Karur ...	7	Karur —	21	0	10	40	4	40	...	
Nagar ...	Pattuguppa ...	1	Kallurkatte ...	81	0	25	40	7	40	2	8
	Do ...	2	Malali (a) ...	1	40	7	40	1	40		
	Nagar ...	3	Nagar ...	43	40	13	40	7	40		
	Do ..	4	Yedoor ...	...		14	0	4	40		
	Do ...	5	Hulikal ...	10	40	4	40	1	40		
	Kerehalli ...	6	Doddinkoppa ...	...		9	0	2	40		
		7	Kudoor ...	...		6	0	3	0		
	Humcha ...	8	Humcha ...	27	0	7	40	4	40		
Tirthahalli	Araga ...	1	Tirthahalli ...	155	0	52	40	19	40	2	8
		3	Araga ...	54	0	7	40	10	40	...	
	Agrahara ...	3	Konundur ...	38	40	36	0	18	0	...	
		4	Hamachakatte ..	40	40	33	40	10	40	...	
		5	Nonabunu ...	19	40	4	40	1	40		
	Agumbe ...	6	Agumbe ...	10	40	4	40	3	0		
		7	Megravalli ...	23	40	12	0	3	0	...	
	Muthur ...	8	Kuruvalli ...	36	0	13	40	3	0	...	
		9	Jattinmakki ..	...		18	0	4	40	...	
		10	Mahishi ...	16	40	18	0	...		...	
	Mandagadde ...	11	Mandagadde ...	13	40	19	40	15	0	...	
		12	Hosabudu ..	22	40	4	40	...		...	
Chitaldrug	Chitaldrug ...	1	Chitaldrug Town ...								
	Gudtanur ...	2	Guntanur Sante ...								
	Bharamasagara ...	3	Sirigere Sante ...	178	61	117	0	48	0	6	71
	Do ...	4	Bharamasagara Sante								
	Turuvanur ...	5	Chikkondanahalli Sante ...								
Jagalur ...	Jagalur ...	1	Jagalur ..	31	35	27	40	15	0	...	
	Bilichodu ...	2	Asagodu ...								
Challakere	Challakere ...	1	Challakere ...	59	0	50	0	18	0	3	72
Molakalmuru ..	Molakalmuru ...	1	Molakalmuru ...	8	40	6	0	1	40	0	0
Hosadurg	Hosadurg ...	1	Hosadurg ...	24	0	32	0	10	66	0	0
	Boodihaloo ...	2	Boodihaloo ...	1	0	0	0	7	0	0	0
	Do	3	Balagooru ...	1	0	0	0	3	30	0	0
	Hosadurg ...		Bagooru Sante ..	1	0	0	0	4	24	0	0
Hiriyur ...	Hiriyur ...	1	Hiriyur ...	49	73	50	0	20	0	1	6½
	Marikanve ..	2	Marikanve ..	52	0	36	0	15	40	2	22½

94

Rental															Remarks
ıga						Opium									
4—05			1905—06			1903—04			1904—05			1905—06			
12			13			14			15			16			17
a.		p.	Rs.	a.	p.	Rs.	a.	p.	Rs.	a.	p.	Rs.	a.	p.	
0	0		300	0	0	72	0	0	72	0	0	36	0	0	
0	0		36	0	0		...			...			...		
0	0		36	0	0		...			..			..		
0	0		30	0	0		...			..			...		
0	0		24	0	0		...			...			...		
0	0		42	0	0		...			...			...		
0	0		42	0	0		...			...			...		
0	0		132	0	0	49	8	0	78	0	0	15	0	0	
0	0		21	0	0										
0	0		72	0	0										
0	0		24	0	0										(a) This shop may be transferred to Gadinerale.
0	0		12	0	0										
0	0		18	0	0										
0	0		6	0	0										
0	0		18	0	0										
0	0		156	0	0	69	0	0	216	0	0	24	0	0	
0	0		18	0	0		...			...			...		
0	0		120	0	0		..			..			...		
0	0		72	0	0		...			...			...		
0	0		24	0	0		...			...			...		
0	0		18	0	0		...			...			...		
0	0		36	0	0		...			...			...		
0	0		63	0	0		..			...			...		
0	0		18	0	0		...			.			...		
0	0		18	0	0		...			...			...		
0	0		24	0	0		...			...			...		
0	0		18	0	0		...			...			...		
0	0		372	0	0	48	0	0	48	0	0	36	0	0	
0	0		120	0	0		...			...			..		
62	0	0	144	0	0	10	0	0	14	0	0	15	0	0	
30	0	0	18	0	0	0	0	0	0	0	0	0	0	0	
72	0	0	39	0	0	0	0	0	0	0	0	0	0	0	
			24	0	0	0	0	0	0	0	0	0	0	0	
			12	0	0	0	0	0	0	0	0	0	0	0	
			6	0	0	0	0	0	0	0	0	0	0	0	
144	0	0	252	0	0	12	0	0	15	0	0	16	8	0	
92	0	0	120	0	0	5	0	0	3	0	0	3	0	0	

Taluk	Hobli	Serial No. of Shop	Locality of the shop	Consumption							
				Ganja (in seers of 80 tolas						Opium	
				1903—04		1904—05		1905—06 up to the end of November		1903—04	
1	2	3	4	5		6		7		8	
				S.	T.	S	T.	S.	T.	S.	T.
Holalkere	Holalkere ...	1	Holalkere ...	37	0	26	0	18	0	0	0
Do	Do ...		Santes ...	28	0	10	0	0	0	0	0
Davangere	Davangere ...	1	Davangere ...	128	0	40	40	16	40	9	24
	Hathadi ...	2	Hathadi ...	15	0	6	0	1	40	0	0
	Mayakonda ...	3	Kodagannur ...	0	0	15	40	7	40	0	0
	Harihara ...	4	Harihara ...	22	0	11	0	4	0	6	45
	Malebennur ...	5	Malebennur ...	0	0	0	0	0	0	0	0
	Do	6	Sirigere ...	0	0	0	0	0	0	0	0
	MYSORE CITY SHOPS.										
Mysore ...	Mysore City ...	1	Sreerámpet ...	540	0	282	0	81	0	48	17
		2	Lashkar Mohalla ...	441	0	147	0	33	0	43	41
		3	Mandi Mohalla ...	435	0	189	0	54	0	68	33
Yedatore ..	Yedatore	1	Yedatore ...	42	0	19	40	10	40	4	71
Do ...	Saligrama ...	2	Saligrama ...	0	0	7	0	4	40	0	0
Hunsur ..	Hunsur ..	1	Hunsur ..	95	15	42	0	20	0	17	4½
	Peryapatna ...	2	Peryapatna ...	31	0	21	0	6	0	5	32
Heggadadevanakote	Heggadadevana Kote	1	Heggadadevanakote ..	39	75	13	40	4	40	1	13¾
	Saragooru ...	2	Saragooru ...	4	40	5	40	3	0	0	35
Nanjangud ...	Nanjangud	1	Nanjangud ..	159	6	81	0	36	0		63½
Gundlepete ...	Gundlepete ...	1	Gundlepete ..	54	0	49	31	27	0	12	74
	Therakanambi ...	2	Therakanambi .	9	0	8	41	5	0	0	0

tion of—				Rental																	Remarks
(in seers of 80 tolas)				Ganja						Opium											
1904—05		1905—06 up to the end of November		1903—04			1904—05			1905—06			1903—04			1904—05			1905—06			
9		10		11			12			13			14			15			16			17
S.	T.	S.	T.	Rs.	a.	p.	Rs.	a.	p.	Rs.	a.	p.	Rs.	a.	p.	Rs.	a.	p.	Rs.	a.	p.	
0	0	0	0	65	0	0	180	0	0	174	0	0	0	0	0	0	0	0	0	0	0	
0	0	0	0																			
10	36	3	48																			
0	0	0	0	1 0	0	0	240	0	0	264	0	0	36	0	0	42	0	0	66	0	0	
0	0	0	0																			
4	64	1	64																			
0	0	0	0	102	0	0	102	0	0	60	0	0	33	0	0	42	0	0	24	0	0	
0	0	9	0																			
64	20	30	8	720	0	0							720	0	0							
21	46	10	0	234	0	0	2460	0	0	2946	0	0	234	0	0	2460	0	0	2946	0	0	
63	19	27	38	540	0	0							540	0	0							
2	0	1	11¼																			
				12	0	0	24	0	0	18	0	0	12	0	0	24	0	0	18	0	0	
0	40¼	0	33																			
12	31	4	12½	48	0	0	168	0	0	144	0	0	84	0	0	168	0	0	72	0	0	
6	19	2	18½	18	0	0	42	0	0	36	0	0	18	0	0	42	0	0	12	0	0	
1	29¾	0	48	4	2	0	79	8	0	60	0	0	4	2	0	79	8	0	15	0	0	
35	0	0	0	2	4	0	6	0	0	6	0	0	2	4	0	6	0	0	6	0	0	
4	4¾	1	72	63	0	0	492	0	0	426	0	0	63	0	0	15	0	0	36	0	0	
	49⅜	2	10⅝	120	0	0	240	0	0	192	0	0	120	0	0	72	0	9	84	0	0	
0	0	0	0																			

Taluk	Name of Hobli	Serial No. of shop	Locality of the shop	Consumption							
				Ganja in seers of 80 Tolas						Opium	
				1903—04		1904—05		1905—06 up to the end of November		1903—04	
1	2	3	4	5		6		7		8	
				S.	T.	S.	T.	S.	T.	T.	S.
Nagamangala.	Nagamangala ...	1	Nagamangala ..	49	40	19	46	7	23	1	4
	Nelligere ...	2	Bellure ..	39	0	16	40	8	19	0	24
T. Narasipur.	T. Narasipur ...	1	T. Narasipur ..	72	0	27	0	13	40	4	6½
	Bannur ..	2	Bannur ...	72	0	39	0	16	40	2	12¾
	Talkad ...	3	Talkad ..	15	0	4	40	0	0	0	0
	Mooguru ...	4	Mooguru ...	18	0	9	0	0	0	0	0
Malvalli.	Malvalli ...	1	Malvalli ..	72	0	27	0	7	40	8	74½
	Poorigali ..	2	Sivansamudra ...	13	40	21	40	6	0	3	3⅜
Seringapatam.	Kura ...	1	Seringapatam ...	178	25	69	20	31	40	13	5
	Do ...	2	Ganjam ...	150	20	74	50	42	0	6	44
	Kirangoor ...	3	Kirangoor ...	14	8	19	60	19	40	1	73
	French Rocks ...	4	French Rocks ...	93	40	38	70	16	40	12	50
	Melkote ...	5	Melkote ...	20	20	17	0	12	0	0	27
Krishnarajapet.	Krishnarajapet ...	1	Krishnarjapet ...	55	69	46	60	22	0	3	48
	Kannambady ...	2	Kannambady ...	30	40	14	16	4	40	0	66
	Do ..	3	Bukenkere ..	1	40	4	22	4	40	0	0
	Kikere .	4	Kikere ..	15	70	6	30	0	0	0	42
Mandya ...	Mandya ...	1	Mandya ...	40	9	19	40	6	0	0	79⅞
Do ...	Maddur ...	2	Maddur ...	50	70	28	40	9	0	3	52¾
Chamarajnagar.	Chamarajnagar ..	1	Chamarajnagar including Santhe Marahalli.	163	40	75	0	40	0	28	63
Yelandur.	Yelandur ...	1	Yelandur ..	24	40	13	40	9	0	3	66
	Agara ...	2	Mamballi ...	19	40	9	0	8	0	16	61

for 1906—07.

98

iton of—		Rental							Remarks
in seers of 80 tolas		Ganja			Opium				
1904—05	1905—06 up to the end of November	1903—04	1904—05	1905—06	1903—04	1904—05	1905—06		
9	10	11	12	13	14	15	16		17
S. T.	S. T.	Rs. a. p.	Rs. a. p.	Rs. a. p.	Rs. a. p.	Rs. a. p.	Rs. a. p.		
1 53	0 60	6 0 0	51 0 0	54 0 0	6 0 0	51 0 0	12 0 0		
0 36	0 17½	19 14 0	21 0 0	42 0 0	19 14 0	21 0 0	6 0 0		
4 37	1 40	24 0 0	105 0 0	90 0 0	24 0 0	24 0 0	24 0 0		
1 38	0 32	9 6 0	54 0 0	102 0 0	9 6 0	12 0 0	6 0 0		
0 29	...	3 0 0	9 0 0	6 0 0	3 0 0	3 0 0	3 0 0		
..	...	1 8 0	3 0 0	9 0 0	1 8 0	3 0 0	3 0 0		
7 35⅝	2 48¾	37 8 0	120 0 0	108 0 0	37 8 0	60 0 0	39 0 0		
1 32⅜	1 8⅜	19 8 0	108 0 0	24 0 0	19 8 0	51 0 0	24 0 0		
12 57	2 32	...	...	384 0 0	...	...	24 0 0		
6 35	2 68	...	...	402 0 0	...	...	12 0 0		
2 78	6 14	126 0 0	290 0 0	84 0 0	126 0 0	290 0 0	12 0 0		
11 23	4 62	..	...	156 0 0	...	...	12 0 0		
0 18	...	...	...	42 0 0	...	...	0 12 0		
4 18	1 24	10 8 0		96 0 0	10 8 0		12 0 0		
...	...	3 0 0	50 0 0	24 0 0	3 0 0	50 0 0	...		
...	...	3 0 0		6 0 0	3 0 0		...		
0 24	...	3 0 0		24 0 0	3 0 0		6 0 0		
1 6	0 39	18 0 0	66 0 0	54 0 0	...	66 0 0	4 8 0		
3 61¼	1 35	12 12 0	60 0 0	102 0 0	..	60 0 0	4 8 0		
21 58	9 48	174 0 0	588 0 0	360 0 0	174 0 0	240 0 0	228 0 0		
4 38	1 20	72 0 0	144 0 0	84 0 0	72 0 0	96 0 0	96 0 0		
11 14	4 40								

SALE OF COUNTRY BEER TAVERNS IN THE BANGALORE CITY AND IN THE BOWRINGPET TALUK FOR 1906—07.

Notice No. 2216, dated 21st March 1906.

1. Notice is hereby given that the exclusive privilege of selling Country Beer or Porter in each of the taverns specified in the appended schedule, for the twelve months beginning with 1st July 1906 and ending with 30th June 1907, will be sold by public auction on the dates and at the places mentioned in the annexed schedule by the Deputy Commissioner of the District concerned or other officer authorized by him.

2. The exclusive privilege will be put up to auction at the upset price fixed at Rs. 35 per hogshead of Beer or Porter which will be sold in the taverns at Bowringpet and the Kolar Gold Fields and at the upset price fixed for each of the taverns in the City of Bangalore by the officer conducting the sale with the previous sanction of the Excise Commissioner.

3. The manufacturers of Beer may bid for or purchase the taverns.

4. Each bidder at the auction shall deposit a sum of Rs. 250 for shops in Bowringpet Taluk and Rs. 100 for those in Bangalore or such other reasonable amount as may be fixed by the officer conducting the sale, previous to bidding. Each tavern will be knocked down to the approved highest bidder, subject to the formal confirmation by the Deputy Commissioner, who will be at liberty to accept or reject the bid at discretion, without assigning reasons for the same. Such formal confirmation will, unless revised by Government, be tantamount to an acceptance of the bid. Parties intending to bid must attend either in person or by duly accredited agents.

5. As soon as the auction is completed, the deposits made by the unsuccessful bidders and not forfeited as hereinafter provided, will be returned to them.

6. The persons to whom the taverns have been knocked down, shall be required to leave his address with the sale-conducting officer in order that the confirmation of the sale may be communicated to that address, and within seven days after service by the said notice by its presentation to the purchaser or any adult male member of the family at the place of said address or by its being affixed thereto or by its forwardal duly registered by post, deposit such further sum as, with the first deposit, will make up a total security of Rs. 500 for each tavern knocked down to them or such other reasonable amount as may be fixed by the Deputy Commissioner according to the value of each tavern; and shall take out licenses and execute counterpart engagements, on the conditions hereinafter set forth. On the failure of any person to make the deposit or to take out license or to execute the counterpart engagement, as aforesaid, the tavern will be re-sold at the risk of such person, or if the auction hereby notified, has already been completed, will be otherwise disposed of at the discretion of the Deputy Commissioner. In the case of the purchaser's death after the confirmation of the sale, it will be binding on his heirs or assigns.

7. Re-sales effected under para 6 *supra*, will be at the risk of the defaulting bidder, who shall forfeit all gain; and in the event of a loss by re-sale or other disposal he shall make good the deficiency between the total amount payable for the whole period under the terms of the original sale and the total amount payable by the successful bidder at the re-sale or by disposal otherwise. In the latter case, the forfeited deposit shall be deducted from the loss arising from the re-sale or other disposal, and the remainder, if any, shall be recovered from the bidder in the same manner as if it were an arrear of land revenue. Should, however, the forfeited deposit be greater than the loss by re-sale or other disposal, the whole of such deposit shall be credited to Government.

8. The license to be taken out under para 6 above, shall be subject to the following conditions, namely:—

(1) The privilege conferred by the license extends to the sale of Country Beer or Porter brewed on the Nilgiris in breweries which may be approved of by the Government or by Messrs. Meakin & Co., Kirkee, or by Messrs. Abraham and Gangadhara Chetty & Co., Bangalore, or in any other Brevery approved by Government.

(2) Each tavern shall be maintained in or close to the existing tavern as described in the schedule hereto appended.

(3) The amount payable for each month on account of the number of hogsheads of Beer or Porter sold, shall be paid into the Taluk Treasury in the first week of the following month, on the challan prescribed for the purpose. The security deposit shall be taken towards the amount due for the last two months of the period of the lease. Failing payment as above, the Deputy Commissioner shall at once proceed to recover the arrears together with interest at 6 per cent, under the rules in force for the collection of land revenue. No remission or abatement of the Government dues shall, on any account whatever, be claimable by the licensee.

(4) The licensee shall further pay a duty of two annas for every gallon of Country Beer or Porter purchased by him, together with local cess at one anna per rupee.

(5) The consignment of Country Beer or Porter purchased by the licensee, shall be sent direct from the Brewery to the Amildar of the Taluk. The letter of advice covering the consignment shall be in duplicate, the original being sent to the Amildar of the Taluk, and the duplicate to the Excise Commissioner. On the duty together with local cess at the abovementioned rate being paid by the licensee on the prescribed challan, the Amildar shall allow the licensee to remove the consignment to his tavern upon a pass signed by the Amildar or other officer authorized on this behalf.

(6) The licensee of every tavern at the Bangalore City shall pay a registration fee under the Municipal Regulation, at the rate of Rs. 180 per annum in advance for the period of the license for his tavern.

(7) The licensee shall use such measures as may from time to time be prescribed by Government, and provide himself with the printed forms of accounts and permits or passes for transport of Beer or Porter, which forms shall be purchased from local Excise Officers.

(8) The licensee shall be bound to take over any Beer or Porter which may remain as stock in hand belonging to the out-going licensee on the 1st July 1905 in the existing tavern, paying to the latter such compensation for the same as may be fixed by the Excise Commissioner.

(9) This lease shall not be transferable by sale, gift, mortgage or otherwise without the previous sanction of the Excise Commissioner.

(10) The Vendor shall equally with the license-holder be responsible in the penalties herein set forth for breach of any of the conditions of the license.

(11) He shall sell Beer or Porter of approved quality. It may be sold to be drunk on the premises up to one reputed quart bottle at a time. It may be sold to be removed off the premises upon the prescribed special passes up to one Imperial gallon (4 seers).

(12) He shall not sell or give Beer or Porter in any quantity whatever directly or indirectly to any European or non-commissioned officer or private or soldier, nor to any European or East Indian woman connected with or related to, men of these classes, nor allow him, her, or them, to drink Beer or Porter in his premises or grounds; he shall not permit drunkenness or disorderly behaviour in his shop or premises, and shall not suffer any gambling whatsoever therein, and shall not knowingly permit prostitutes or persons of notoriously bad character to meet or remain therein; he shall not wilfully harbour or conceal therein soldiers or others knowing or having reason to believe such soldiers or others to be deserters; he shall give information of suspicious characters to the Magistrate or Police Officer; and he shall not sell or give Beer or Porter to any Police Officer, Railway servant, or Excise Officer, whilst on duty or to insane person.

(13) He shall fix in a conspicuous place outside of his shop a board on which shall be legibly painted his name, Vendor's name, the number of his shop, and the article he is licensed to deal in.

(14) He shall not receive any articles whatsoever in barter or pledge and payment for Beer or Porter shall be made in ready money only at one and a-half rupee per imperial gallon and proportionately for fractions thereof.

(15) The Beer or Porter sold under this license shall contain 75 per cent of malt or any of the preparations of malt and 3 lbs. of good Kent hops per hogshead, and shall be of the same quality and density as purchased from the Brewer, without dilution or adulteration. The original gravity of the Beer wort shall not exceed 1070 at 60° Fahrenheit. The Beer or Porter sold shall not contain more than 8 per cent alcohol by volume. The licensee will be bound to pay duty, together with local cess, at the prescribed rate per gallon of proof spirit on all alcohol in the Beer or Porter in excess of 8 per cent by volume, besides being liable for prosecution. Samples of such Beer or Porter shall be sent duly bottled from the Brewery or tavern for examination and test whenever required by the Excise Department.

(16) Any Magistrate having local jurisdiction, or any officer acting under his warrant, or any Abkari or Excise officer shall be allowed entry to the shop at any hour to test the Beer or Porter on the premises, and examine the shop accounts, which it shall be the duty of the License-holder and Vendor to keep and produce. Such accounts shall be true and correct, and written up daily in the prescribed forms. All condemned Beer shall be destroyed.

(17) He shall close his shop by 9 P.M., and not open it before sunrise except on special permit in cases of Native festivals, etc.

(18) Beer brought for the Commissariat Department and rejected by the Military or other Departments, shall not, under any circumstances, be forwarded for sale in the tavern.

(19) The shop shall have only one door, and no window be allowed to the rear or ends of the building; the bar where the liquor is sold from, shall be opposite to the entrance door, and so situated that all persons inside can be seen by any one passing to and fro in the street; and no second room shall be allowed to be kept open for customers.

(20) The licensee shall be bound by the rules in force, and which may be issued from time to time by Government.

9. In the case of any breach of the above conditions either by the licensee, or with his connivance and privity, by any person in his employment, or in the event of the licensee neglecting to open his tavern or to carry on his business with due care and attention, it shall be competent to the Deputy Commissioner to impose upon the licensee a fine not exceeding Rs. 10 for every such breach or neglect, or at the option of the Deputy Commissioner, to declare the money deposited with him forfeited, and to cancel the license and to re-sell the privilege or to otherwise dispose of it at the risk of the licensee; and all loss thereby caused, together with the loss accruing to Government in consequence of the licensee not carrying on his business by opening his tavern on 1st July 1905 shall be made good by him. When a license is cancelled, the rent for the whole period of the lease shall become due at once, which shall be recovered together with all losses as if they were arrears of land revenue.

10. The penalties laid down in the last preceding clause shall not exempt the licensee or his employees from prosecution for any offence committed against the Excise Laws in force.

BEER SCHEDULE FOR THE YEAR 1906-07.

Name of Taluk	Serial No. of tavern	Situation of the tavern		Names of the present license-holders	Consumption					Rental					License fee payable on each Hogshead of 54 gallons per highest bid				Place of sale	Date of sale	Remarks
			Locality		1901-02.	1902-03.	1903-04.	1904-05.		1901-02.	1902-03.	1903-04.	1904-05.	1905-06.	1902-03.	1903-04.	1904-05.	1905-06.			
1	2	3	4	5	6	7	8	9	10	11	12	13	14	15	16	17	18	19	20	21	22
					Hogs	Hogs	Hogs	Hogs	Hogs	Rs.	Rs.	Rs.	Rs.	Rs.	Rs.	Rs.	Rs.	Rs.			
Bangalore	1	42	Mysore road	Rangaswamy Mudaliar.	49	30	...	...	...						...	...	...	...	Bangalore Taluk Cutcherry	1st and 2nd May 1906	
Do	2	385	Arlepet tank road	Momnadi Pille ...	...	...	..	...	...	1400	2,200	...	...	...	...	...	...	...			
Do	3	2	Avenue road, Yelahanka gate ...	Do	...	...	...	..	...						...	...	...	...			
Bowringpet ...	1	...	Robertsonpe	Punyakoti Mudaliar ...	...	432	445	90	78·32	...	..	...	..	...	47	56	63	61	Gold Fields Magistrate's Court	25th May 1906	
Do	2	...	Bowringpet	Do	...	44	24	6	5·22	...	...	...	...	...	43	50½	55	46			

P. N. PURNAIYA,
Excise Commissioner in Mysore.

BEER SCHEDULE FOR THE YEAR 1906-07

Name of Taluk	Serial No. of Tavern	Locality	Name of the present License-holder	Consumption					Rental					License fee payable on each hogs-head of 54 gallons as per highest bid				Place of sale	Date of sale	Remarks
				1901—02	1902—03	1903—04	1904—05	1905—06 for five months	1901—02	1902—03	1903—04	1904—05	1905—06	1902—03	1903—04	1904—05	1905—06			
1	2	3	4	5	6	7	8	9	10	11	12	13	14	15	16	17	18	19	20	21
				Hogs-head	Hogs	Hogs	Hogs	Hogs	Rs.	Rs.	Rs.	Rs.	Rs.							
Bangalore City	1	Mysore Road ...	V. C. Rangasami Mudaliar ...	49	30	...	...	15					360	...	...	...	...	Bangalore Taluk Cutcherry		
	2	Aralepet Tank Road ...	T. Mannundi Pillai.	56	30	...	...	15	1400	2200	No bids	No bids.	360	...	...	...	..			
	3	Avenue Road Yelahanka Gate	No bid ...	16	8	...	...	...					...	...	...	...	...			

BEER SCHEDULE FOR THE YEAR 1906—07.

Name of Taluk	Serial No. of Tavern	Locality of the Tavern	Name of the present License-holder	Consumption					License fee payable on each Hogs-head of 54 gallons as per highest bid			Place of sale	Date of sale	Remarks
				1901—02	1902—03	1903—04	1904—05	1905—06 for the 1st five months	1903—04	1904—05	1905—06			
1	2	3	4	5	6	7	8	9	10	11	12	13	14	15
				Hogs-head	Hogs	Hogs	Hogs	Hogs	Rs.	Rs.	Rs.			
Bowringpet	1	Robertsonpet	Somasundram Mudaliar	...	432	445	197	76	56	63	61	Kolar Gold Fields 1st Class Magistrate Court.		
	2	Bowringpet		...	44	24	11	6	$50\frac{1}{2}$	55	46			

SALE OF TODDY SHOPS FOR 1906-07.

NOTIFICATION No. 2214, DATED 21ST MARCH 1906.

104

1. It is hereby notified that the exclusive privilege of selling toddy in each shop or group of shops specified in the appended Schedule, for one year, beginning with 1st July 1906 and ending with 30th June 1907, will be put up to public auction at upset prices by the respective Deputy Commissioners or by Revenue Assistant Commissioners or Divisional Officers of the Excise Department or other officers specially authorized by the Deputy Commissioners for the purpose, on the dates mentioned below, and at the respective Taluk or Sub-Taluk Kasabas, and, except as hereinafter provided, will be knocked down to the bidder offering the highest amount of rent above those prices. If the sales are not completed on the abovenamed days, they will be continued on the next following days (close holidays excepted). Should there be no bids for any shops singly, the officer conducting the sale shall be at liberty to revise, when necessary, in consultation with the Excise Divisional Officer, if present, the grouping of shops as specified in the Schedule hereto appended, or, if necessary, to reserve shops for which there may be no bids, for disposal hereafter, or to sell the said privilege in any particular case, by means of tenders or by private negotiation. The privilege in any Coffee Estate may be sold to the planter for a fixed amount not less than Rs. 12 per shop per annum. The shops in alienated villages shall be separately sold, and the amounts connected therewith shall be shown in the accounts under a distinct head. The sale in every case shall be subject to the conditions hereinafter set forth, and shall, *unless revised by the Government*, take effect on formal confirmation by the Deputy Commissioner who shall be at liberty to accept or reject any bid at his discretion without assigning reason for the same. Such formal confirmation will be necessary whether the sale be held by the Deputy Commissioner himself or by any other officer appointed by him. Should there be no bid above the upset price, the officer conducting the sale may lower the upset price at his discretion. The officer conducting the sale may, at his discretion and without assigning any reason, refuse to accept the bid of any person on the ground that he has been convicted by a criminal court of such an offence, or has been guilty of such an infringement of the terms of his license or of a contract under the Excise Regulation or Opium Act as to render him undesirable as a holder of a license, or on the ground that he is insolvent, or in order to prevent arrangements to the detriment of Government interests, or for any other valid reason.

2. (*a*) Parties intending to bid must attend either in person or by duly authorized agents; and no person shall be permitted to bid either on his own behalf or on account of any one else until he has made a deposit of Rs. 25 for shops in the Kolar Gold Fields and the Cities of Bangalore and Mysore and Rs. 10 for shops in other places, or such other reasonable amount as may be fixed by the officer conducting the sale. Provided that the Government may at any time dispense with such initial deposit. Such deposit will, if offered, be received within three days previous to the date of sale. Deposits made by unsuccessful bidders, if not forfeited as hereinafter provided, will be returned at the close of the sale.

(*b*) No shops or group of shops shall be knocked down in the name of more than one person or of more than one company or firm duly represented. The selling officer shall refuse to register as a purchaser any one in whose name the bidding has not proceeded.

3. (*a*) The successful bidder shall, on the exclusive privilege being knocked down to him, at once, if so required by the selling officer, or otherwise at the close of the day's sale, further deposit a sum equal to one-twenty-fourth part of his bid for the year, that is to say, one-half of the monthly rent unless the initial deposit equals or exceeds two months' rent. Should he failed to do so, the deposit, if any, made by him under clause 2 (*a*) will be forfeited, and the privilege will be sold again on the

above conditions, or otherwise disposed of at his risk, as the Deputy Commissioner or selling officer may determine.

(*b*) The person to whom a shop or group of shops has been knocked down and who has made deposits as provided above, shall be required to leave his address with the selling officer, in order that the confirmation of the sale may be communicated to that address by a notice, and he shall, within seven days after the service of the said notice by its presentation to himself or to any adult male member of his family at the place of said address or by its being affixed thereto or by its forwardal duly registered by post, pay at the Taluk Treasury concerned, such further sum as, with the former deposits, will make up an aggregate sum equal to two months' rent, and execute at the same time before the Amildar the necessary engagements and take out the necessary licenses, as hereinafter set forth.

4. (*a*) The deposit made under the preceding para shall be either in cash or in Government of India Securities duly endorsed in favor of the Deputy Commissioner. Provided that in cases where the monthly rent exceeds Rs. 10 (in lieu of a deposit of two months' rent as above), the Deputy Commissioner may, in his discretion, allow any purchaser to deposit one month's rent as above, and to furnish approved personal security for an amount equal to four months' rent. In all cases where the monthly rent does not exceed Rs. 10, a cash deposit equal to two months' rent shall invariably be taken, and no personal security shall be accepted. If, on enquiry subsequent to sale, the purchaser shall be found to be a foreigner having no property in the Mysore State, or to be of doubtful solvency he may be required to deposit twice the prescribed sum or to get a surety or sureties, residents of and possessing property in the Mysore State, to execute a security bond for the due payment of *all moneys* that may become due by him under the terms of the contract.

(*b*) Should the initial deposit exceed the sum required to be deposited under clause 3 (*b*) or clause 4 (*a*), the excess will be refunded to the purchaser.

5. The purchaser of the exclusive privilege shall execute an agreement binding himself and, unless exempted by the Deputy Commissioner by an order duly recorded, so much of his movable and immovable property as may be deemed sufficient, to observe the conditions hereinafter set forth, as well as those specified in the license to be issued to him ; and his surety, if any has been accepted under the above para, shall also execute a bond in the prescribed form binding himself and so much of his movable and immovable property as may be deemed sufficient by the Deputy Commissioner, for the due fulfilment by the purchaser of the terms of his agreement. The agreement and bond so executed shall be stamped at the expense of the purchaser. They shall also be registered at his expense when the amount secured is Rs. 100 and above.

6. If default is made in making the deposit or deposits or in executing the agreement or the security bond, if any, and in taking out licenses as aforesaid, the exclusive privilege shall be forthwith re-sold or otherwise disposed of by the Deputy Commissioner at the risk of the first purchaser, who shall forfeit to the Government any deposit or deposits already made by him, and shall further be liable to make good any loss caused by such re-sale or other disposal. He shall not be entitled to any gain accruing from the re-sale or other disposal, and he shall be debarred from bidding again for the same or for any other shop or group of shops. In the case of loss the forfeited deposits will be deducted from it and the remainder, if any, shall be recovered as if it were an arrear of land revenue In the case of the purchaser's death after the confirmation of the sale, it will be binding on his heirs or assigns.

7. As soon as the agreements and bonds have been executed, the Deputy Commissioner will issue a license in the prescribed form, assigning to the purchaser the exclusive privilege referred to therein, subject to the following conditions ; but nothing herein contained shall exempt the purchaser of the privilege from liability to the penalties prescribed for breaches of the conditions set forth below, though a formal license may not have been issued to him :—

(i) The exclusive privilege conferred by the license extends to the sale of Date, Paimyra, Cocoanut, Bagani and Dadasal toddy. But in tracts where both Date and Bagani toddy shops exist, the licensee of the Date Toddy shop shall not tap Bagani trees and the licensee of the

Bagani Toddy shop shall not tap Date trees but both licensees can tap any of the other palm trees named above.

(2) The Deputy Commissioner shall be at liberty to issue license for the sale of foreign liquors, for the manufacture and sale of country beer, and for the manufacture and sale of arrack and other country spirits.

(3) The amount of rent shall be payable into the local Government Treasuries on printed chellans furnished for the purpose by Government, in equal monthly instalments commencing from 1st July 1906. No amount shall be paid to or received by the Excise Officers. In the malnad and semi-malnad taluks, the Deputy Commissioner may permit patels of villages who are not themselves licensees to receive payments not exceeding Rs. 50 from any individual at a time. But if the amount of annual rent for any shop does not exceed Rs. 12, the whole of it shall be paid in not more than three quarterly instalments. Each instalment shall be regarded as the rent for the month or quarter in respect of which it is payable. The licensee will make separate payment on account of local cess. Each month's or quarter's rent shall be payable on or before the 20th of the same month or before the end of the quarter. If default is made, the Amildar may, with the sanction of the Deputy Commissioner, by record in writting, suspend or cancel the license, order the forfeiture of all deposits made by the defaulter and proceed to re-sell or otherwise dispose of the shop or group of shops at the defaulter's risk (as soon after the last day of the month or quarter as may be possible), with effect from date of issue of license to the new purchaser, or from the date of other disposal. Provided, however, that instead of re-selling the same as above the Deputy Commissioner may, in his discretion, direct the Amildar to issue licenses to sub-vendors or vendors under the defaulting licensee for rents, the aggregate of which is not less than the rent the defaulting licensee had agreed to pay The officer who has power to suspend the license may, however, at his discretion, allow sales to continue pending re-sale or other disposal of the privilege.

NOTE.—The licensee of a Jatra shop shall pay the rent thereof in full before the Jatra begins.

(4) For the supply of toddy to his shops the licensee shall have the privilege of obtaining, subject to tree-tax rules, toddy-yeilding trees in the groves assigned to his shops or groups of shops, and he shall be at liberty to manufacture toddy from the trees in private lands, under private arrangements between himself and the owners of such lands. He may purchase toddy from any licensed toddy shop-keeper on application to the Inspector, who will grant the required permits on proof of the necessity for the same. No toddy except the produce of trees marked by a proper officer and tapped under a license shall be kept in the shop or offered for sale or sold.

(5) For all toddy-yielding trees, tree-tapping licenses shall be annual. For the convenience of the licensee, the applications for tree-tapping licenses will be received, trees will be marked, and licenses will be issued during the fifteen days and pots may be attached to such marked trees during the eight days immediately preceding the period to which they relate to take effect from the commencement of such period. Provided that no toddy shall be removed from the trees except during the currency of such license.

(6) (*a*) Persons applying for the issue of tree-tapping licenses will be responsible to Government for all sums payable as tree-tax on account of the trees licensed therein to be tapped and also for tree-rent in the case of trees on Government unoccupied lands and also for local cess thereon.

(*b*) On receipt of an application, the Inspector will at once take steps for the marking of the tree by an officer superior in rank to a Sub-Inspector, and for the timely issue of the license. Applicants for date trees shall get the requisite spaces on their stems prepared and point

out to the marking officer, when required by the latter to do so, the trees applied for by them. Should they failed to do so, after reasonable notice, the tree-tax and tree-rent paid by them shall be liable to be forfeited at the Deputy Commissioner's discretion.

(7) No tree shall be tapped, nor shall toddy be drawn from any toddy tree, nor shall any pot be attached to any toddy tree until the tree has been marked by the proper officer. But the removal of leaves for the purpose of making incisions and the preparation of the spathes or incisions for the drawing of toddy is permitted as soon as the application in the prescribed form has been delivered to the Treasury concerned.

(8) (1) No tree shall be tapped for toddy without a license therefor to be obtained by payment of tree-tax at the following rates: —

Description of trees.	Rates of tree-tax including local cess per tree per annum.		
	Rs.	a.	p.
Date	1	1	0
Cocoanut	2	2	0
Palmyra	1	9	6
Bagani or sago	1	9	6
Dadasal (Arenga wightii)	0	8	6

NOTE.—The licenses will be free of tax to the Mysore Government in the cases specified in clause 15 (1) (*b*) below.

(2) In addition to the above tax, tree-rent at annas 4 per tree per annum with local cess at 3 pies thereon shall be paid for all Government trees applied for being tapped for the supply of toddy shops whether within or outside the Mysore territories or in the Civil and Military Station of Bangalore.

NOTE.—No trees upon Government occupied land can be tapped without the consent of the owner. The present arrangement as regards trees on alienated land will hold good subject, of course, to the levy by Government of tree-tax.

(9) The tree-tax shall be payable in the following instalments, unless the Excise Commissioner shall otherwise direct:—

Period within which license is applied for	Proportion of tree-tax to be paid at the time of application for license	Proportion of tree-tax to be paid on the first of the 3rd month
Between 1st July 1906 and 30th April 1907 ..	One-third ..	The remaining two-thirds.
Between 1st May 1907 and 30th June 1907 ...	The whole ...	.....

(10) (*a*) The tree-rent together with the local cess on tree-rent and also the local cess on the tree-tax for trees applied for shall be payable in full at the time of application for tapping license.

(*b*) If any instalments are not paid within the time, the license shall be liable to be cancelled or suspended under Section 26 of the Excise Regulation.

(*c*) When the licensee makes default and his shop is re-sold, his rights to and claim on Government trees cease and determine.

(*d*) In case of default, the Amildar with the Deputy Commissioner's permission will order the suspension of the tapping license till the arrears are paid up and if, after receiving notice of such suspension, the defaulter continue to tap the trees, he will be prosecuted for illicit tapping.

(11) The deposit made by the licensee will be taken as security for the due performance of the conditions of the license and if not forfeited or credited or otherwise disposed of shall be taken in payment of the instalment due in the last months or month of the period of the license.

All arrears and deficits payable by the licensee shall, with interest at 6 per cent per annum, be recoverable from him or his surety under the rules in force for the recovery of land revenue. Interest shall be calculated on all arrears from the date of default and on deficits from the date of re-sale or disposal otherwise. No remission or abatement of the rent or compensation shall, on any account whatever, be claimable by the licensee, nor will he be entitled to any compensation for any trees withdrawn or taken for the public purpose.

(12) If the Deputy Commissioner does not confim the re-sale, he may make such other arrangements as may appear advisable for the remainder of the period of the lease, in which case he shall serve a notice on the defaulting licensee informing him of the nature of the arrangements made.

(13) If the licensee of a group of shops wishes to establish a depot for depositing toddy required for distribution to his shops, he shall obtain a license for it in the prescribed form. The passes issued with the toddy transported, shall be subject to examination and check by the officers authorized in this behalf.

(14) The tree-tax on toddy produced by trees in the Madras Presidency but consumed in the Mysore State, will be credited to the Mysore Government. The rate of tree-tax to be paid in such cases will invariably be the highest in force on either side of the frontier. Tree-tax on trees in the Madras Presidency for which tapping licenses are about to be taken out by Mysore shop-keepers, must be paid in one instalment to the Amildar of the Taluk concerned in the Mysore State, who will grant a receipt in the prescribed chellan form and certify at the foot that the applicant is a person entitled to take out tree-tapping licenses. The applicant will then make his application to British authorities in accordance with the Madras Government Tree-tapping Rules, and will obtain a transport permit from the Inspector concerned in the Mysore State for the transport of the toddy drawn from the frontier to the shop or depot for which it is intended, after having complied with all requirements of the Madras Government Rules.

(15) (1) Tree-tapping licenses in the prescribed form shall be issued on the application :—

(*a*) of licensed toddy shop-keepers or of their duly authorized agents,

(*b*) of tree-owners in coffee estates, hittals and kans in the malnad free of the prescribed tree-tax for drawing toddy for *bona fide* domestic purposes as per Government Order No. 11897-906—Excise 485, dated 20th June 1898, for such number of trees as may be found necessary by the Excise Commissioner.

(2) The licenses may be issued in the name of the applicant himself or of his nominees.

(16) Applications for the grant of tree-tapping licenses must be made in the prescribed form to the Excise Inspector of the Range concerned through the local Treasury. Forms may be obtained from him or the Assistant Inspectors under him.

(17) Applications for tree-tapping licenses, for trees in occupied or alienated lands should be countersigned by the owner of the trees intended to be marked, in token of his consent. Applications for tree-tapping licenses for trees in State Forests and plantations should be countersigned by the Forest Range Officer in token of his consent.

(18) Deputy Commissioners may, subject to the orders of the Excise Commissioner from time to time, prescribe the minimum number of trees for which license will be granted, and the minimum number to be entered in a single application. They may also direct that the trees situated in one village only shall be included in an application.

(19) Every person to whom a tapping license is granted for the manufacture of toddy shall observe the following rules in tapping date trees :—

(*a*) Date trees shall be tapped only by professional men.

(*b*) Trees tapped one year shall not ordinarily be tapped the next year.

(*c*) Trees shall not be over-tapped or over-worked.

(*d*) In no date trees shall the initial incision be made at any point less than 3 feet from the ground except in places where permission is specially given by the Excise Commissioner.

(*e*) The depth and width of the incision shall not exceed one-third of the diameter of the tree, and the length of it shall not exceed eight inches.

(*f*) Every fresh incision shall not be less than one foot above the last incision except in localities where permission is specially given.

(*g*) The central spike-like clusters shall not be touched. Of the lateral leaves not less than two layers of leaves shall be left, reckoning from the layers immediately next to the central clusters down to the top line of the incision ; or in other words, above the top line of the incision not less than eight leaves shall be left excluding the central spike-like clusters, on that face of the tree on which the incision is made.

(*h*) The licensee shall not cut or injure or permit to be cut or injured the trees licensed to him or any other trees.

(*i*) The licensee or his employer will be liable to pay a fine of one rupee for each tree in excess of three per cent of the number of trees marked for him which may die from over-tapping or careless tapping either during the lease or within six months after its expiration.

(20) The licensee shall not interfere with the persons holding license for cutting date leaves for mat-making, rope-making, basket-making, or for agricultural or other purposes, when they make use of the trees assigned for such purposes, and not received for tapping.

(21) The licensee of the depot or shop or group of shops will be required to keep true account of the receipts and issues of toddy from day to day in ink in the prescribed form. The accounts and permits shall be in printed books which may be obtained from the local Excise Officer on payment of cost price. Permits for toddy received and the counterfoils of permits issued must be carefully filed. The signing of blank permits for subsequent issue is prohibited. The accounts and counterfoils of permits shall be preserved and delivered to the local Excise Officer immediately after the close of the lease. They shall be produced when asked for by the Deputy Commissioner or any officer appointed by him or by an Excise Officer not below the rank of an Excise Assistant Inspector. Such returns and information as may be required by the Deputy Commissioner or Excise Officer not below the rank of an Excise Assistant Inspector shall be furnished by holders of licenses without delay.

(22) The sales must be conducted in a suitable building which shall have only one door and no windows or other opening shall be allowed to the rear or at the ends of the building. The bar at which toddy is sold shall be opposite the entrance door and so situated that all persons inside can be seen by any one passing to and fro in the street, and no second room shall be used for the sale of toddy, or be kept open for customers.

(23) Toddy shall not be sold except in shops duly licensed by the Deputy Commissioner, in the prescribed form and no new shops shall be opened without the previous sanction of the Excise Commissioner. Tree-foot sales or sales in the open, or the disposal of toddy in any other manner unauthorized by the rules, are strictly prohibited. Provided, however,

that in Bagani tracts, the licensee who has purchased the right of vend of Bagani toddy, may permit the tapping of Bagani trees for domestic consumption as well as for sale, within the limits of the village purchased by him.

(24) The Deputy Commissioner may, whenever he thinks fit, direct shops to be closed or permit transfers of shops from one place to another within two hundred yards of the sanctioned site. A sufficient supply of toddy shall be maintained in all sanctioned shops, the quantity being such as may be fixed by the Excise Divisional Officer.

(25) The licensee shall place the license granted to him in a conspicuous place in the shops.

(26) The right is reserved to the Deputy Commissioner to grant occasional licenses for the sale of toddy on the occurrence of fairs, festivals, etc., in places in the vicinity of which, there are no regularly licensed shops. Such licenses shall ordinarily be granted to shop-keepers, who usually supply the locality. Their period shall not exceed fifteen days and the fee to be paid therefor shall be fixed at the Duputy Commissioner's discretion unless he decides to sell the same by public auction.

(27) A signboard shall be affixed in a conspicuous part of the front of each shop containing, in the local vernacular, the name of the shop-keeper, number of his license and the rate at which toddy is sold by him. The sale or transport of toddy by persons suffering from leprosy or any contagious disease and the employment of such persons in the shop, are prohibited.

(28) The licensee shall prevent all drunkenness or disorder or gaming within his shops.

(29) No shop shall be opened before sunrise or kept open after 9-30 P. M. in the City of Bangalore except under special authority. The shops shall be kept open during the authorized hours, unless its temporary or permanent closure is authorized by the Deputy Commissioner.

(30) The licensee shall not harbour robbers or thieves or disorderly or riotous persons or prostitutes or soldiers or others known or believed to be deserters. No persons shall be harboured in any shop during the night, but, on the contrary, the licensee shall give intimation to the nearest Magistrate or Police Officer as to any such persons who may resort to his shops.

(31) The licensee shall not receive any grain, jewels, goods, wearing apparel, or other article in barter or in pawn for toddy, but on the Offer of any such, shall give information to the nearest Magistrate or Police Officer.

(32) The licensee, vendor, or vendors shall not sell to any person more than three measuring seers of toddy to be consumed by the person at one time in the shop. He shall not allow any one to take out of his shop without a pass more than two seers or imperial quarts with the exception of bakers who are permitted to purchase and remove the quantity of toddy specified in the pass held by them. Toddy can be removed upon passes for consumption up to the limit of one imperial gallon or four seers.

(33) The distillation of spirit from toddy is absolutely prohibited.

(34) Toddy shall be sold pure as drawn from trees, and shall not be adulterated or diluted in any manner in the shops, or depots if any. No ingredient noxious to health shall be put into the toddy either to increase its intoxicating power or for any other purpose. All officers authorized to inspect shops and depots are authorized to detain any liquor found unfit for consumption or use and Excise Commissioner, all Deputy Commissioners and Deputy Excise Commissioner and Excise Assistant Commissioners are empowered to destroy such liquor.

(35) Toddy shall not be sold to the public at less than the retail rates fixed by Government as per schedule attached.

(36) The licensee shall possess or use on any licensed premises only such standard measures of capacity as may, from time to time, be prescribed by the Excise Commissioner. The officers authorized to inspect licensed

shops, are empowered to enter and examine the premises to test measures in use and the toddy under sale and to call for and check accounts in the shop.

(37) The licensee shall have such measures tested and stamped ta his own expense.

(38) No toddy shall be sold or given to any European non-commissioned officer, private or solder, or to any European or Eurasian camp follower, or to any member of the families of any of the aforesaid persons, without the permission, in writing, of the Commanding Officer, or of some person duly authorized by him in this behalf; nor to any European or Eurasian sailor, nor to any sepoy, member of the Police force, Excise officer, or a servant of a Railway Company whilst on duty; nor to any European vagrant under escort of the Police; nor to any child under fourteen years of age, nor to any insane person for consumption on the premises; nor shall any toddy be sold *on credit.*

(39) The Deputy Commissioner or Assistant Commissioner in charge of the Taluk may direct that all shops for the sale of toddy on, or adjacent to, the line of march shall be closed whilst a regiment or detachment of European or Native soldiers is passing or encamped in the vicinity. Such soldiers may be supplied with toddy by such persons as the Government may select for the purpose, notwithstanding the licensee's exclusive privilege.

(40) The Government reserves the power to terminate the lease on public grounds, on giving the licensee fifteen days' notice and awarding a reasonable compensation to the licensee. The licensee will have no claim to compensation or remission on account of any arrangements which may be made by Government in regard to country beer or other description of liquor than toddy.

(41) The license shall not be transferable by sale, gift or otherwise or be sub-rented except with the permission of the Excise Commissioner. Applications for the resignation of shops in whole or in part will be summarily rejected by the Deputy Commissioner.

(42) No person shall be appointed by the licensee for the management of any such privilege without the Deputy Commissioner's previous approval.

(43) All engagements entered into by agent, shall be deposited with the Deputy Commissioner within one month from the date of execution.

(44) If it comes to the licensee's knowledge that any person employed by him in the manufacture, carriage or sale of toddy commits any breach of the Excise Law or of the engagements entered into by him, it shall be the licensee's duty to report the matter to the Deputy Commissioner, and to comply with the directions of the Deputy Commissioner respecting the further employment of such person.

(45) The licensee of shop or group of shops shall not, during the term of the license, have any interest in the exclusive privilege of vending arrack within five miles from it nor permit any person having interest in the exclusive privilege of vending arrack within the said area of five miles to hold any share or interest in his exclusive privilege of selling toddy; nor shall he, during the term of his license, without the written permission of the Excise Commissioner, have any interest, direct or indirect, in any toddy shop or farm outside the territories of Mysore, or in the Civil and Military Station of Bangalore.

(46) The licensee shall provide himself with printed forms of permits for transport and possession of toddy. Such permits shall be in the form prescribed by the Excise Commissioner, and shall be purchased from local Excise officers. He shall have no other pecuniary dealings with any Excise officer.

(47) The licensee shall pay the usual mohatarfa tax on carts used for conveying toddy but such carts shall not be impressed for Government work.

(48) In case of any breach of the aforesaid Rules or of the conditions of the license either by the licensee or with his connivance or privity by any person in his employment, or in case of the licensee neglecting to open his shops on 1st July 1906, or to carry on his business with due care and attention, it shall be competent to the Deputy Commissioner to impose upon the licensee a fine not exceeding the sum of Rs. 50 for every such breach or neglect, or at the option of the Deputy Commissioner to declare the money deposited with him forfeited, and to cancel the license, and to re-sell the exclusive privilege or otherwise dispose of it at the risk of the licensee, or to place it under the management of Government. When a license is cancelled, the rent for the whole period of the license shall become due at once; and all loss caused to Government by the cancelment of the license or by the re-sale or other disposal of the privilege shall be made good by the licensee, or his surety in the manner specified in condition 53. All sums due shall be recovered in the same manner as if they were arrears of land revenue.

(49) An Inspection note-book with the pages numbered consecutively for inspecting officers to enter their remarks, shall be maintained and be handed over to the Excise Inspector in charge of the Range or any officer authorized by him to receive it on a receipt being given therefor.

(50) The imposition of a fine, or the forfeiture of a deposit, or the cancellation of the license under the last preceding condition, shall not be held to prevent the prosecution of the licensee or his agents or employees for any offence punishable under the law for the time being in force.

NOTE.—For continuing breaches of a license, continuing fines may be imposed.

(51) No person who has been convicted of any heinous offence under the Indian Penal Code shall be employed in the carriage or sale of liquor without the Deputy Commissioner's previous permission.

(52) If the licensee shall be convicted on prosecution before a Magistrate of any offence against the Excise Regulation or Opium Act or other law for the time being in force, which, in the Deputy Commissioner's opinion, renders him unfit to hold the license, it shall be lawful for the Deputy Commissioner to declare his license forfeited or sell or otherwise dispose of the privilege at the risk of the licensee.

(53) All sums payable by the licensee may be deducted from the amount of his deposit, or recovered by attachment and sale of the property of the licensee or his surety, under any law for the time being in force for the recovery of arrears of land revenue.

(54) The licensee shall be bound by the provisions of the Excise Laws and Rules thereunder for the time being in force and by the terms and conditions of the license. The licensee shall, on requisition by the Deputy Commissioner or other officer duly authorized by him, deliver up his license for amendment or for the issue of a fresh license accordingly.

(55) In every grove where toddy-yielding trees are tapped, a ladder shall always be kept by the tap-men to enable Excise officers to examine incisions or spathes, as the case may be, or to measure the incisions.

113

DATES OF SALE.

District	Taluk	Date
		May 1906
Bangalore	Bangalore City	1
	Bangalore Taluk	2
	Anekal	4
	Hoskote	8
	Devanhalli	10
	Podballapur	12
	Nelamangala	14
	Magadi	16
	Channapatna	19
	Kankanhalli	21
		May 1906
Kolar	Goribidnur	3
	Bagepalli	7
	Chikballapur	9
	Sidlaghatta	11
	Chintamani	15
	Srinivaspur	17
	Malbagal	19
	Kolar	21
	Malur	23
	* Kolar Gold Fields	25
	Bowringpet	26
		May 1906
Hassan	Belur	1
	Manjarabad	3
	Arkalgud	7
	Hole-Narsipur	9
	Hassan	11
	Channarayapatna	14
	Arsikere	17
		May 1906
Kadur	Kadur	19
	Tarikere	21
	† Yedahalli	23
	Koppa	25
	Mudgere	28
	Chikmagalur	31

District	Taluk	Date
		May 1906
Tumkur	Kunigal	8
	Tumkur	10
	Gubbi	12
	Tiptur	16
	Chiknayakanhalli	19
	Sira	23
	Maddagiri	25
	Pavagada	28
		Apl. 1906
Mysore	Yedatore	24
	Hunsur	26
	Heggaddevankote	28
	Nanjangud	30
		May
	Gundlupet	2
	Chamrajnagar	4
	Yelandur	7
	T.-Narsipur	9
	Malvalli	11
	Mandya	14
	Seringapatam	16
	Krishnarajpete	18
	Nagamangala	21
	Mysore City and Taluk	23
		May 1906
Shimoga	Shimoga	4
	Tirthahalli	8
	Nagar	10
	Sagar	12
	Sorab	14
	Shikarpur	16
	Honnali	18
	Channagiri	21
		May 1906
Chitaldrug	Hosdurga	8
	Holalkere	10
	Davangere	12
	Jagalur	15
	Molakalmuru	17
	Challakere	19
	Hiriyur	22
	Chitaldrug	25

* Gold Fields Magistrate's Court.
† Deputy Amildar's Office.

P. N. PURNAIYA,
Excise Commissioner in Mysore.

114.

Read 13/14

The Mysore Gazette.

Vol. 41.] PUBLISHED BY AUTHORITY. [No. 15.

BANGALORE, THURSDAY, APRIL 12, 1906.

☞ Separate paging is given to the Parts in order that they may be filed as distinct compilations.

CONTENTS.

PART I.—Notifications by the Government of His Highness the Maharaja of Mysore

PART II.—Notifications by the Government of India; The Hon'ble the Resident in Mysore; Chief Judge; Survey and Inam Superintendent; Comptroller; Chief Engineer; Mysore State Railway; Amrut Mahal Department; Inspector-General of Registration; Senior Surgeon; District and Sessions Judges; Sub-Judges; Deputy Commissioners of Districts; Forest Officers; Presidents, Bangalore and Mysore City Municipalities; Season Reports; Mortuary and Meteorological Statements; Postal Notices; Civil and Military Station Notifications, &c.

PART III.—Legislative Measures and Rules thereunder.

PART IV.—Official Papers.

PART I.

Notifications by the Government of His Highness the Maharaja of Mysore.

GENERAL AND REVENUE.

No. 9902—*San.* (43-05)-14, *dated* 23*rd*—26*th March* 1906.

It is hereby notified for general information that the places mentioned hereunder in the district of Tumkur will be deemed to be infected areas, for the purposes of the Regulations issued with Notifications Nos. 9383—Mis. F. 21-96 and 9384—Mis. F. 21-96, dated the 10th February 1898, under the Epidemic Diseases Regulation :—

Place	*Taluk*
Govindanaikanpalya	... Tumkur.

No. 9948—*San. F.* 126 *of* 1905, *Sl.* 6, *dated* 24—26*th March* 1906.

Whereas the Government of His Highness the Maharaja of Mysore are satisfied that there is danger of an outbreak of plague in Mahishi in the Tirthahalli Taluk, Shimoga District, if persons from plague-infected areas are permitted to assemble at that place on the occasion of Sri Aswathanarayanadevara Rathotsava :

The Government of His Highness the Maharaja of Mysore, in exercise of the powers vested in them by the Epidemic Diseases Regulation, II of 1897, prohibit the attendance of persons thereat from plague-infected areas from the 5th to the 12th April 1906.

All persons proceeding to the said Rathotsava in contravention of this notification will be turned back.

No. 10261—*San.* (7-05)-136, *dated* 31*st March*—4*th April* 1906.

It is hereby notified for general information that attendance of persons from infected areas at the festival noted below, has been prohibited by the Madras Government:—

Name of jatra—Car festival of Hiriyadka Virabhadra temple.

Place—Bommarbetta village.

Taluk—Udipi.

District—South Canara.

Date—From 1st to 11th May 1906, inclusive.

Authority—Endorsement No. 375 P., dated the 27th March 1906, from the First Assistant to the Hon'ble the Resident in Mysore.

No. 10291—*San. F.* 33 *of* 1905, *Sl.* 14, *dated* 4*th April* 1906.

Whereas the Government of His Highness the Maharaja of Mysore are satisfied that there is danger of an outbreak of plague in Asagodu in the Davangere Taluk, Chitaldrug District, if persons from plague-infected areas are permitted to assemble at that place on the occasion of Siddeswara jatra.

The Government of His Highness the Maharaja of Mysore, in exercise of the powers vested in them by the Epidemic Diseases Regulation, II of 1897, prohibit the attendance of persons thereat from plague-infected areas from the 9th to the 12th April 1906.

All persons proceeding to the said jatra in contravention of this notification will be turned back.

No. 10357—*San.* (7-05)-137, *dated* 5*th April* 1906.

It is hereby notified for general information that attendance of persons from infected areas at the fair and festivals noted below, has been prohibited by the Madras Government:—

Name of jatra	Place	Taluk	District	Date		Authority
				From	To	
*1. Kutandarswami festival and cattle fair.	Kuvagam and the villages round it.	Tirukkoyilur ...	South Arcot ...	21st April to 9th May 1906, inclusive.		Endorsement No. 410 P., dated the 31st March 1906, from the First Asst. to the Hon'ble the Resident in Mysore.
2. Annual Shridaivagala jatra.	Kauvatirtha Karigattur village.	Kasargod ...	South Canara .	1st to 11th May 1906, inclusive.		Do No. 408 P., do

* The holding of the cattle fair at Kuvagam or in any of the villages within a radius of 5 miles from it is prohibited.

No. 10545—*San.* (7-05), *Sl.* 140, *dated* 10*th April* 1906.

It is hereby notified for general information that attendance of persons from infected areas, at the festivals noted below, has been prohibited by the Madras Government:—

Name of jatra	Place	Taluk	District	Dated		Authority
				From	To	
*1 Marulu Siddeswaraswami's car festival.	Ujjini ...	Kudligi ...	Bellary ...	25th April to 4th May 1906, inclusive.		Endorsement No. 436 P., dated the 6th April 1906, from the First Asst. to the Hon'ble the Resident in Mysore.
2. Car festival of Sri Venkataramanaswami.	Madakasira ...	Madakasira ..	Anantapur ...	7th to 9th May 1906, inclusive.		Do No. 438 P., do

* The pilgrimage is prohibited.

No. R. 12553—*L. R.* 437-05-5, *dated* 28*th March* 1906.

Under Section 6 of the Land Acquisition Regulation, No. VII of 1894, it is hereby declared that the land described hereunder is required for a public purpose, *viz.*, for a camping ground; and under Sections 7 and 3 (*c*) of the said Regulation, the Assistant Commissioner in charge of the Heggaddevankote group of taluks is authorized to take order for the acquisition of the said land :—

District	Taluk	Hobli	Village	Name of khatedar	Survey No.	Dry, wet or garden	Total extent	Assessment	Extent now required	Boundaries			
										East	West	North	South
							A. g.	Rs. a. p.	A. g.				
Mysore	Heggaddevankote	Hobli Antersante	Nisna	Syed Oomar *bin* Rahiman Sab .. Enjoyer Syed Ahamed Sab	53	Dry	49 12	17 0 0	31 17*	Nisna Survey Nos. 50, 51 & 49.	Karapur Survey Nos. 7 & 8	Mysore Manantoddy road	Kabbani river
				Do ...	50	Dry	14 1	8 0 0	2 20	Nisna Survey No. 50	Survey No. 53	Survey No. 53	Survey No. 53

Remarks—* Of this 10 acres and 12 guntas is phut kharab included in the camping ground.

No. R. 12592—*L. R.* 554-05-3, *dated* 29*th March* 1906.

Under Section 6 of the Land Acquisition Regulation, No. VII of 1894, it is hereby declared that the land described hereunder is required for a public purpose, *viz.*, building houses in Madapura village, Heggaddevankote Taluk; and under Sections 7 and 3 (*c*) of the said Regulation, the Assistant Commissioner in charge of the Hunsur group of taluks is authorized to take order for the acquisition of the said land :—

District—Mysore.
Taluk—Heggaddevankote.
Hobli—Hampapura.
Village—Madapura.
Name of khatedar—Kappani Gauda.
Survey No.—110.
Total extent—5 acres and 7 guntas.
Assessment—Rs. 4.
Extent now required—2 acres and 27 guntas.

Boundaries—
East—Lane.
West—Survey Nos. 30, 31.
North—Survey No. 111.
South—Village and Survey No. 29.
Remarks—As there are no vacant building sites in the village this land is wanted to build houses by the villagers and has been marked out in accordance with the modern sanitary requirements.

No. R. 12594—*L. R.* 553-05-2, *dated* 29*th March* 1906.

Under Section 6 of the Land Acquisition Regulation No. VII of 1894, it is hereby declared that the land described hereunder is required for a public purpose, *viz.*, building houses in Kyathanhalli village; and under Sections 7 and 3 (*c*) of the said Regulation, the Assistant Commissioner in charge of the Hunsur group of taluks is authorized to take order for the acquisition of the said land :—

District—Mysore.
Taluk—Heggaddevankote.
Hobli—Hampapura.
Village—Kyathanhalli.
Name of khatedar—Kantha Dasi.
Survey No.—61—3.
Total extent—2 acres and 27 guntas.
Assessment—Rs. 2.
Extent now required—1 acre and 12 guntas.

Boundaries—
East—Survey No. 80.
West—Survey Nos. 58 and 60.
North—Village.
South—Survey No. 62.
Remarks—As there is no vacant site in the village this land is wanted for building houses by the villagers and the land is contiguous to the existing houses.

No. R. 12622—*L. R.* 561-05-5, *dated* 30*th March* 1906.

Under Section 6 of the Land Acquisition Regulation No. VII of 1894, it is hereby declared that the land described hereunder is required for a public purpose, *viz.*, for constructing a

Police Station with lines and a musafirkhana at Talkad, T.-Narsipur Taluk; and under Sections 7 and 3 (c) of the said Regulation, the Assistant Commissioner in charge of the Nanjangud group of taluks is authorized to take order for the acquisition of the said land :—

District—Mysore.

Taluk—T.-Narsipur.

Hobli—Talkad.

Village—Vadayandahalli.

Name of khatedar—Siddabasavadevaru.

Survey No.—265.

Dry, wet or garden—Garden.

Total extent—4 acres and 14 guntas.

Assessment—Rs. 8-8-0.

Extent now required—

Dimensions in yards—East to west 44, north to south 66.

Total—24 guntas.

Boundaries—

East—Talkad-Mudukthore road.

West—Owner's remaining land Survey No. 265.

North—Survey No. 266 and Narsipur-Talkad road.

South—Owner's remaining land Survey No. 265.

No. R. 12738—*L. R.* 447-05-5, *dated* 31*st March*—2*nd April* 1906.

Under Section 6 of the Land Acquisition Regulation No. VII of 1894, it is hereby declared that the lands described hereunder are required for a public purpose, *viz.*, for extending the Palace Zoo grounds at Mysore in the Mysore District; and under Sections 7 and 3 (c) of the said Regulation, the Deputy Commissioner of the Mysore District is authorized to take order for the acquisition of the said lands :—

District	Taluk	Hobli	Village	Name of khatedar	Survey No.	Dry, wet or garden	Total extent	Assessment	Extent now required		Boundaries			
									Extent	Assessment	East	West	North	South
							A. g.	Rs. a. p.	A. g	Rs. a. p.				
Mysore	Mysore	Mysore	Mysore	Rachiah ...	500	Dry and garden	3 17 2 0 5 17	13 0 0	5 17	13 0 0	Govinda Row's and Rama Row's garden.	Road ...	Srinivasiengar's garden.	City boundary.
				Do ...	501	Garden	0 25	2 12 0	0 25	2 12 0	Syed Mohidin's land.	Do ...	S. No. 502	S No. 500

CIVIL APPOINTMENTS.

Heads of Departments and all other officers concerned are informed that Notifications in the Gazette are in future to be accepted as disposing of all references regarding leave, transfers, appointments, powers and other personal questions affecting Gazetted officers, as to which orders are gazetted by the Government in this Part of the Gazette, and that any subsidiary orders as to relief of their subordinates and the like, which such notifications necessitate, must be issued by them on receipt of the Gazette, as no other orders will be issued by Government.

No. G. 5032—*G M.* 235-05-3, *dated* 11*th April* 1906.

His Highness the Maharaja has been pleased to sanction to Sir P. N. Krishna Murti, K.C.I.E., privilege leave for three months, with effect from the 30th March 1906, he having relinquished the Office of Dewan on the previous afternoon.

No. G. 5039—*G. M.* 235-05-2, *dated* 11*th April* 1906.

His Highness the Maharaja having permitted Sir P. N. Krishna Murti, K.C.I.E., to retire from the service on the expiration of the leave granted to him with effect from the date of his relinquishing the office of Dewan, desires to take the opportunity of placing on record his sense of the services rendered by Sir Krishna Murti during a period of nearly thirty-six years. Entering the service as an Assistant Superintendent in 1870, he attained the rank of Deputy Commissioner in 1880, of Chief Court Judge in 1890, and of Member of Council in 1895. Finally he was appointed Dewan in 1901. The recognition by the paramount power of his services to the State has been marked by the conferment on him in 1898 of a Companionship of the Most Eminent Order of the Indian Empire, and by his promotion in 1903 to the rank of a Knight Commander in the same Most Eminent Order. In wishing him farewell as Dewan, His Highness desires to express his cordial thanks for the services rendered by Sir Krishna Murti in that capacity both to Her Highness the Maharani, C.I., late Regent, and to himself. Their good wishes will accompany him in his retirement to the leisure to which his long and meritorious services have entitled him.

No. R. 13265—*L. R.* 460-05-8, *dated* 10—11*th April* 1906.

The privilege leave for one month and a half granted to Mr. T. Ramachandra Rao, Amildar of Chitaldrug, in Notification No. R. 11459—L. R. 460-05-5, dated the 3rd March 1906, is extended by one month and fifteen days.

No. G. 4988—*G. M.* 241-05-3, *dated* 11*th April* 1906.

Mr. K. P. Puttanna Chetty entered upon his duties as Member of Council in the afternoon of Thursday the 29th March 1906.

No. J. 2775—*Cts.* 248-2, *dated* 7*th April* 1906.

Under Section 12 of the Code of Criminal Procedure, Mr. M. A. Narayana Iyengar, B.A., B.L., Extra Assistant Commissioner and 2nd class Magistrate, Hassan, is invested with the powers of a Magistrate of the 1st class, and under Section 357 thereof, he is empowered to take down evidence in cases tried by him in the English language.

No. J. 2793—*Cts.* 250-2, *dated* 10*th April* 1906.

In exercise of the power conferred by Section 3 (*d*) of the Mysore Land Acquisition Regulation, VII of 1894, the Government of His Highness the Maharaja are pleased to appoint the Subordinate Judge of Mysore to perform the functions of a Court under the said Regulation within the local limits of his ordinary Civil Jurisdiction.

The Petition Box kept at the Office of the General and Revenue Secretariat, Bangalore, will be cleared at 12 noon every day by the Secretary to Government, General and Revenue Department, and in his absence from Bangalore, by the Deputy Secretary.

By Order,

B. K. VENKATA VARADA IYENGAR,

Secy. to Govt., Gen. & Rev. Dept.

PUBLIC WORKS.

No. 336—2207, *dated* 5*th April* 1906.

Mr. K. M. Vasudeva Rao, B.A., B.C.E., Sub-Assistant Engineer, attached to the office of the Executive Engineer on special duty, is granted privilege leave of absence for fifteen days, with effect from the 5th instant, or date of availing himself of the same.

No. 315—2091, *dated* 31*st March* 1906.

Consequent on the revision of the scale, the following promotions are ordered in the Engineer Establishment of the Mysore Public Works Department (Local) with effect from 1st October 1905 :—

No.	Name	Present class	Class to which promoted	Nature of promotion	Remarks
1	Mr. B. Subba Rao	Executive Engineer, 4th class, permanent, and 3rd class, *sub pro tem* and 2nd class, temporary ...	Executive Engineer, 3rd class ...	Permanent ...	Continuing as Executive Engineer, 2nd class, temporary.
2	,, K. Krishna Iyengar	Assistant Engineer, 1st class, permanent, and Executive Engineer, 4th class, *sub pro tem* ...	Do 4th class ...	Do ...	
3	,, R. V. Sundaram Iyer	Assistant Engineer, 2nd class, permanent, and 1st class, *sub pro tem*	Assistant Engineer, 1st class ...	Do ...	
4	,, R. S. Navaratna	Assistant Engineer, 3rd class, permanent, and 2nd class, *sub pro tem*	Do 2nd class ...	Do ...	
5	,, H. D. Rice	Do do ...	Do do ...	Do ...	
6	,, T. S. Sesha Iyengar	Assistant Engineer, 3rd class, permanent, and 2nd class, temporary	Do do ...	Do ...	To have effect from the date of his return from leave.
7	,, T. S. Raghava Char	Sub-Assistant Engineer, 1st class, permanent and Assistant Engineer, 3rd class, *sub pro tem* ...	Do 3rd class ...	Do ...	
8	,, B. C. Sreenivasa Iyengar	Do do ...	Do do ...	Do ...	
9	,, Y. Aswathanarayana Rao	Sub-Assistant Engineer, 2nd class, permanent, and 1st class, *sub pro tem*	Sub-Assistant Engineer, 1st class.	Do ...	
10	,, K. Sreenivasa Iyengar	Do do ..	Do do ..	Do ...	
11	,, K. R. Seshachar	Do do ...	Do do ...	Do ...	
12	,, C. Vijiarangam Naidu	Do do temporary ...	Do do ...	Do ...	
13	,, T. K. Arunachallam Iyer	Do do ...	Do do ...	Do ...	Seconded.
14	,, K. Subbuswami Iyer	Sub-Assistant Engineer, 3rd class, permanent, and 2nd class, *sub pro tem*	Do 2nd class.	Do ...	Is now on extraordinary leave without pay. Seconded.
15	,, K. V. Desikacharya	Sub-Assistant Engineer, 3rd class, permanent and 2nd class, temporary	Do do ...	Do ...	
16	,, S. A. Ramaswami Iyer	Do 3rd class do ...	Do do ...	Do ...	
17	,, M. G. Rangaiya	Do do ...	Do do ...	Do ...	
18	,, K. M. Vasudeva Rao	Do do ...	Do do ...	Do ...	
19	,, S. Sreenivasa Iyer	Do do ...	Do do ...	Do ...	
20	,, K. Prahlada Rao	Assistant Engineer, 1st class, permanent, and Executive Engineer, 4th class, temporary ...	Executive Engineer, 4th class ...	*Sub pro tem* ...	

21	,, C. Madhava Rao	Assistant Engineer, 1st class, permanent ...	Do do ...	Temporary ...	
22	,, V. Aiyaswami Iyer	Do do ...	Do do ...	Do ...	
23	,, R. V. Sundaram Iyer	Do do ...	Do do ...	Do ...	
24	,, John Bhore	Do 2nd class, permanent, and 1st class, temporary	Assistant Engineer, 1st class ...	*Sub pro tem* ...	
25	,, J. E. A. D'Cruz	Assistant Engineer, 2nd class, permanent ...	Do do ...	Temporary ...	Seconded.
26	,, Popatbhai Dungarshi	Do do ...	Do do ...	Do ...	
27	,, R. S. Navaratna	Do do ...	Do do ...	Do ...	
28	,, H. D. Rice	Do do ...	Do do ...	Do ...	
29	,, F. A. Steele	Do do ...	Do do ...	Do ...	Supernumerary.
30	,, B. B. Garudacharya	Do 3rd class, permanent, and 2nd class, temporary	Do 2nd class ...	*Sub pro tem* ...	
31	,, C. Krishna Iyengar	Assistant Engineer, 3rd class, permanent ...	Do do ...	Do ...	
32	,, K. Ananthacharya	Do do ...	Do do ...	Temporary ...	
33	,, Venkata Rao, Nijigal	Do do ...	Do do ...	Do ...	
34	,, Kongatti Ponnappa	Do do ...	Do do ...	Do ...	
35	,, T. G. Lakshmana Rao	Do do ...	Do do ...	Do ...	Seconded.
36	,, M. A. Anandalwar...	Do do ...	Do do ...	Do ...	
37	,, N. Rama Rao	Sub-Assistant Engineer, 1st class, permanent, and Assistant Engineer, 3rd class, temporary ...	Do 3rd class ...	*Sub pro tem* ...	
38	,, B. Nanjundaradhya	Do do ...	Do do ...	Do ...	
39	,, Y. Aswathanarayana Rao	Sub-Assistant Engineer, 1st class, permanent ...	Do do ...	Temporary ...	
40	,, K. Sreenivasa Iyengar	Do do ...	Do do ...	Do ...	
41	,, K. R. Seshachar	Do do ...	Do do ...	Do ..	
42	,, C. Vijiarangam Naidu	Do do ...	Do do ...	Do ..	
43	,, K. Subbuswami Iyer	Do 2nd class, permanent ...	Sub-Assistant Engineer, 1st class .	*Sub pro tem* ...	Seconded.
44	,, K. V. Desikacharya	Do do ...	Do do ...	Do ...	
45	,, S. A. Ramaswami Iyer	Do do ...	Do do ...	Do ...	
46	,, M. G. Rangaiya	Do do ...	Do do ...	Temporary ...	
47	,, K. M. Vasudeva Rao	Do do ...	Do do ...	Do ...	
48	,, S. Sreenivasa Iyer...	Do do ...	Do do ...	Do ...	

By Order,
W. McHUTCHIN,
Secy. to Govt., P. W. D.

121

The Mysore Gazette.

Vol. 41.] PUBLISHED BY AUTHORITY. [No. 15.

BANGALORE, THURSDAY, APRIL 12, 1906.

PART II.

Notifications by Govt. of India, Resident, Chief Court, &c.

BEFORE THE HON'BLE THE RESIDENT IN MYSORE, AT BANGALORE.

Application in file No. 107 *of* 1906.

In the matter of the estate of V. Sundaralinga Chetty, late of the Civil and Military Station, Bangalore, but now ... ... *Deceased.*

Kokilamba Ammal .. .. *Applicant.*

Whereas Kokilamba Ammal, resident of the Civil and Military Station, Bangalore, claiming to be the widow of the said V. Sundaralinga Chetty, deceased, has applied for a certificate under Section 17, Act VII of 1889, to collect the sum of Rs. 5,354, due to the estate of the said deceased under Policy No. 335 7006, issued by the New York Life Insurance Company, Calcutta.

Notice is hereby given of the said application; and all claimants in the estate of the said V. Sundaralinga Chetty, deceased, are invited to appear before the Hon'ble the Resident at Bangalore, on Wednesday the 25th of April 1906 at 11 A.M., when the petition of the said Kokilamba Ammal will be heard, and the right to the certificate determined.

Given under my hand and seal this 30th day of March 1906.

By Order,

N. S. TIRUMALAI AIYANGAR,
Registrar.

IN THE CHIEF COURT OF MYSORE.

CIVIL SIDE.

Rule of Practice No. 128, *dated 2nd April* 1906.

Under Section 639 of the Code of Civil Procedure the Chief Court has made and issues the following rules for the preparation and transmission of statements by the Subordinate Civil Courts, in supersession of the directions contained in Rules of Practice Nos. 5, dated 3rd June 1878, and 97, dated 20th February 1899.

The statements will be prepared in the office of the District Judges and submitted quarterly to the Chief Court on or before the 20th of the month succeeding the quarter to which they relate.

QUARTERLY JUDICIAL STATEMENT No. 1—(CIVIL).

Statement showing the Result of the Trial of Civil Suits in the Courts of Original Jurisdiction in the.....Division in the.....Quarter of.....

Class and locality of Court and name of presiding Judge.	Suits remaining from last quarter	Instituted in present quarter	Received by transfer	Total for disposal	Transferred to other Courts	Withdrawn with leave, Section 373	Adjusted by mutual agreement	Dismissed for non-payment of process fee, Section 97	Dismissed for non-appearance of both parties, Section 98	Decreed *ex parte*, Section 100	Decreed by default, Section 102	Decreed on confession, Section 152	Decreed on compromise, Section 375	Decreed on payment into Court, Section 379	Decreed by arbitration, Section 522	Contested		Total disposed of	Pending	Three months and more	Six months and more	One year and more	Remarks and explanation of delay in all original cases pending one year and more and small cause cases pending over three months.
																Judgment for plaintiff in whole or in part	Judgment for defendant						
1	2	3	4	5	6	7	8	9	10	11	12	13	14	15	16	17	18	19	20	21	22	23	24

Note.—The sections refer to the Code of Civil Procedure.

QUARTERLY JUDICIAL STATEMENT No. 2—(CIVIL).

Statement showing the Average Duration of suits, the Average Number of Adjournments and the detention of Witnesses in the Courts of the.....Division during the.....quarter of.....

Class and locality of Court and name of presiding Judge	Average duration of suits		Average number of adjournment	Number of witnesses discharged after				Explanation of delay where witnesses have been detained till the 4th day
	Contested	Uncontested		1 day	2 days	3 days	4 days	
1	2	3	4	5	6	7	8	9

QUARTERLY JUDICIAL STATEMENT No. 3—(CIVIL).

Statement showing the execution of the decrees of the Civil Courts in the ..... Division in the ..... quarter ending .....

1	Class and locality of Court and name of presiding Judge		
2	Number sent to other Courts for execution	Number of decrees passed during the quarter	
3	* Incapable of execution		
4	Balance remaining for execution		
5	Decrees ordered for immediate execution, Section 256		
6	Decrees satisfied voluntarily in Court		
7	Satisfied out of Court and certified under Section 258		
8	Pending	Applications to execute decrees	
9	Filed		
10	Received by transfer or transmission		
11	Total		
12	Decrees completely executed on application		
13	Decrees partially executed on application		
14	Applications struck off the file without execution		
15	For more than three months	Pending at the end of the quarter	
16	For more than six months		
17	Total pending		
18	Decrees executed by pos-ession being given		
19	By specific performance		
20	Persons arrested	Nature and number of coercive processes executed	Imprisonment of person
21	Committed to Civil Jail		
22	Attached		Movable property
23	Sold		
24	Attached		Immovable property
25	Sold		
26	Orders under Section 305		
27	Remarks by way of explanation as to all cases under column 16 and as to cases regarding movable property included in column 15		

* *Note* 1.—Such as declaratory decrees or orders for defendant without costs.

Note 2.—The sections refer to the Code of Civil Procedure.

QUARTERLY JUDICIAL STATEMENT No. 4—(CIVIL).

Statement showing the nature and number of applications before the Civil Courts in the ..... Division during ..... quarter ending .....

1	Class and locality of Court and name of presiding Judge		
2	Plaints admitted		
3	Plaints rejected or returned		
4	Granted	For setting aside orders for dismissal of suits under Sections 97, 98 and 102, and *ex parte* decrees, Section 100	Applications
	Rejected		
5	Granted	For arrest or attachment before Judgment, Chapter XXXIV	
	Rejected		
6	Granted	Temporary Injunctions, Chapter XXXV	
	Rejected		
7	Relating to execution of decree not entered in statement 3		
8	Granted	To be declared an insolvent, Chapter XX	
	Rejected		
9	Granted	To sue as a Pauper	
	Rejected		
10	Granted	For review of Judgment or new trial	
	Rejected		
11	For certificate to collect debts under the Succession Certificate Regulation		
12	For grant of probate or letters of administration.		
13	For the charge of person or property of minors		
14	For appointment of manager or guardian of lunatic or admission into Lunatic Asylum		
15	All other applications not detailed		
16	Total number instituted		
17	Number disposed of		
18	Number left pending		
19	Of these, number pending for more than three months		
20	Remarks and explanation where cases have been pending more than three months		

Note.—The sections refer to the Code of Civil Procedure.

QUARTERLY JUDICIAL STATEMENT No. 5—(CIVIL).

Statement showing the Work of the appellate Courts of the.....Division during the.....quarter ending.....

Class and locality of Court and name of presiding Judge	Remaining	Instituted including received by transfer	Total	Transferred or dismissed for default	Decided			Remanded for redecision by lower court, Section 562	Number left pending			Average duration of appeals	Remarks and explanation where cases have been pending for more than 6 months
					In favor of appellant		In favor of respondent		For more than 3 months	For more than 6 months	Total pending		
					In whole	In part							
1	2	3	4	5	6	7	8	9	10	11	12	13	14
Appeal from { Decrees ... / Orders other than Decrees													

QUARTERLY JUDICIAL STATEMENT No. 6—(CIVIL).

Statement showing the Number of Processes and the amount of Stamp Fees collected in he Courts of the.....Division during the.....quarter ending.....

Name of Court	Number of processes issued	Amount of stamp fees collected on processes	Travelling allowance in connection with service or execution	Number of Amins	Number of Peons.	Cost of Process Serving Establishment deducting fines and stoppages	Office contingencies, cost of stationery, peon's badges, and other miscellaneous expenditure	Total columns 7 and 8	Remarks
1	2	3	4	5	6	7	8	9	10

V. A. RAJARATNA MUDALIAR,
Registrar.

EXCISE DEPARTMENT.

SALE OF SEPARATE ARRACK SHOPS FOR 1906-07.

Notification No. 2213, dated 21st March 1906.

1. Notice is hereby given that the exclusive right of selling arrack in each of the separate shops specified in the appended schedule* for the twelve months beginning with 1st July 1906 and ending with 30th June 1907, will be put up to public auction at upset prices, by the respective Deputy Commissioners or by Revenue Assistant Commissioners or by Divisional Officers of the Excise Department or other Officers specially authorized by the Deputy Commissioners for the purpose, on the dates and at the Taluk Head-quarters or other places mentioned below, subject to the conditions hereinafter set forth. If the sales are not completed on abovenamed days, they will be continued on the next following days (close holidays excepted).

2. (*a*) Each bidder at the auction will deposit a sum of Rs. 60 for shops in the Kolar Gold Fields, Rs. 25 for those in the Mysore and Bangalore Cities and Rs. 10 for those in other places, or such other reasonable amount as may be fixed by the officer conducting the sale, previous to bidding. It will, if offered, be received at any time within three days prior to the date of sale, provided that the Government may, at any time, dispense with such initial deposit. The deposits made by unsuccessful bidders if not forfeited as hereinafter provided, will be returned at the close of the sale. The shops or group of shops will be knocked down to the approved highest bidder, subject to formal confirmation by the Deputy Commissioner, who will be at liberty to accept or reject any bid at his discretion without assigning reasons for the same. Such formal confirmation will, *unless revised by Government for special reasons*, be tantamount to an acceptance of the bid and will be necessary whether the sale be held by the Deputy Commissioner himself or by any other officer appointed by him. Parties intending to bid must attend either in person or by duly accredited agents. Should there be no bid above the upset price, for any shop singly, the officer conducting the sale may, in consultation with the Excise Divisional Officer, if present, club together more than one shop but not more than two in the District Head-quarter taluks and Kolar Gold Fields and six in other places or, if necessary, reserve shops for which there may be no bids, for disposal hereafter. He may, subject to formal confirmation of the Deputy Commissioner, sell the right in any particular case by means of tenders or by private negotiation. He may also lower the upset price at his discretion. The officer conducting the sale may at his discretion, and without assigning any reason, refuse to accept the bid of any person, on the ground that he has been convicted by a criminal court of such an offence, or has been guilty of such breach of the conditions of the license, or of a contract under the Excise Regulation or Opium Act, as to render him undesirable as a holder of a license, or on the ground that he is insolvent, or in order to prevent arrangements to the detriment of Government interests, or for any other valid reason.

(*b*) No shop shall be knocked down in the name of more than one person or of more than one company or firm duly represented. The selling officer shall refuse to register as a purchaser any one in whose name the bidding has not proceeded.

3. (*a*) The successful bidder shall, on the exclusive privilege being knocked down to him, at once, if so required by the selling officer, or otherwise at the close of the day's sale, further deposit a sum equal to one-twenty-fourth part of his bid for the year, that is to say, one-half of the monthly rent unless the initial deposit equals or exceeds two months' rent. Should he fail to do so, the deposit, if any, made by him under clause 2 (*a*) will be forfeited, and the privilege will be sold again on the above conditions, or otherwise disposed of at his risk, as the Deputy Commissioner or selling officer may determine.

(*b*) The person to whom a shop or group of shops has been knocked down and who has made deposits as provided above, shall be required to leave his address with the selling officer, in order that the confirmation of the sale may be communicated to that address by a notice, and he shall, within seven days after the service of the

* For Schedule see Supplement to the *Mysore Gazette*, dated 5th April 1906.

said notice by its presentation to himself or to any adult male member of his family at the place of said address or by its being affixed thereto or by its forwardal duly registered by post, pay at the Taluk Treasury concerned, such further sum as, with the former deposits, will make up an aggregate sum equal to two months' rent, and execute at the same time before the Amildar the necessary engagements and take out the necessary licenses, as hereinafter set forth.

4. (*a*) The deposit made under the preceding para shall be either in cash or in Government of India Securities duly endorsed in favor of the Deputy Commissioner. Provided that in cases where the monthly rent exceeds Rs. 10 (in lieu of a deposit of two months' rent as above), the Deputy Commissioner may, in his discretion, allow any purchaser to deposit one month's rent as above, and to furnish approved personal security for an amount equal to four months' rent. In all cases where the monthly rent does not exceed Rs. 10, a cash deposit equal to two months' rent shall invariably be taken, and no personal security shall be accepted. If, on enquiry subsequent to sale, the purchaser shall be found to be a foreigner having no property in the Mysore State, or to be of doubtful solvency, he may be required to deposit twice the prescribed sum or to get a surety or sureties, residents of and possessing property in the Mysore State, to execute a security bond for the due payment of *all moneys* that may become due by him under the terms of the contract.

(*b*) Should the initial deposit exceed the sum required to be deposited under clause 3 (*b*) or clause 4 (*a*), the excess will be refunded to the purchaser.

5. The purchaser shall execute an agreement in the prescribed form, binding himself and, unless exempted by the Deputy Commissioner by an order duly recorded, so much of his movable and immovable property as may be deemed sufficient by the Deputy Commissioner, to observe the conditions hereinafter set forth, as well as those specified in the license to be issued to him; and his surety or sureties, if any have been accepted, shall also execute a bond in the prescribed form binding himself or themselves and so much of his or their movable or immovable property as may be deemed sufficient by the Deputy Commissioner for the due fulfilment by the purchaser of the terms of the agreement. The agreement and the bond so executed shall be stamped at the expense of the purchaser. They shall also be registered at his expense when the amount secured is Rs. 100 and above.

6. If default is made in making the deposit or deposits or in executing the agreement or the security bond, if any, and in taking out licenses as aforesaid, the exclusive privilege shall be forthwith re-sold or otherwise disposed of by the Deputy Commissioner at the risk of the first purchaser, who shall forfeit to the Government any deposit or deposits already made by him, and shall further be liable to make good any loss caused by such re-sale or other disposal. He shall not be entitled to any gain accruing from the re-sale or other disposal, and he shall be debarred from bidding again for the same or for any other shop or group of shops. In the case of loss the forfeited deposits will be deducted from it and the remainder, if any, shall be recovered as if it were an arrear of land revenue. In the case of the purchaser's death after the confirmation of the sale, it will be binding on his heirs or assigns.

7. Re-sales or other disposal effected under para 6 will be at the risk of the defaulting bidder, who shall forfeit all gain; and in the event of a loss caused by re-sale or other disposal he shall make good the deficiency between the total amount payable for the whole period under the terms of the original sale and the total amount payable by the successful bidder at the re-sale or other disposal. In the latter case, the forfeited deposit shall be deducted from the loss arising from the re-sale or other disposal, and the remainder, if any, shall be recovered from the defaulter in the same manner as if it were an arrear of land revenue. Should, however, the forfeited deposit be greater than the loss by re-sale, the whole of such deposit shall be credited to Government.

8. The amount of rental, the consumption of arrack in each shop, etc., for several years past are specified in the appended schedule.

9. The license to be taken out under para 3 (*b*) above, shall be subject to the following conditions but nothing herein contained shall exempt the purchaser of the

privilege from liability to the penalties prescribed for breaches of the conditions set forth below though a formal license may not have been issued:—

(1) The amount for which the privilege has been purchased shall, if it exceeds Rs. 12 per annum, be payable into the local Taluk Treasury in equal monthly instalments commencing from July 1906. But where it does not exceed Rs. 12 per annum, it shall be paid in not more than three equal quarterly instalments. Each instalment shall be regarded as the rent for the month or quarter in respect of which it is payable. The licensee is not required to make any additional payment on account of local cess. Each month's or quarter's rent shall be payable on or before the 20th of the same month, or before the end of the quarter for which the instalment is due. If default is made, the Amildar may, with the sanction of the Deputy Commissioner, suspend, or declare by record in writing that the license is forfeited, and proceed to re-sell or otherwise dispose of the shop or group of shops as soon after the last day of the month or quarter as may be possible with effect from the date of issue of license to the new purchaser or from the date of other disposal. The officer who has power to suspend license may, however, at his discretion, allow sales to continue pending re-sale of other disposal of the privilege.

Note.—The licensee of a Jatra shop shall pay the rent thereof in full before the Jatra begins.

(2) The deposit made by the licensee shall be taken as security for the due performance of the conditions of the license and if not forfeited, credited or otherwise disposed of, shall be credited in payment of the instalments due in the last two months of the period of the lease. Provided, however, that where the shop or group of shops is re-sold or otherwise disposed of, the deposit shall, at the discretion of the Deputy Commissioner, be either forfeited or be appropriated towards the arrears due by the defaulter as well as towards the deficits, if any, arising from the re-sale or other disposal of the shop or group of shops. The balance of such arrears and deficits, if any, shall be recoverable from the licensee under the rules in force for the recovery of arrears of land revenue. No remission or abatement of the rent or compensation shall, on any account whatever, be claimable by the licensee.

(3) Interest at 6 per cent per annum shall be recoverable on all arrears from the date of default, and on deficits from the date of re-sale.

(4) The privilege conferred by the license extends only to the sale of arrack ordinarily of the strength of 20° under-proof and with the special permission of the Deputy Commissioner or other officer authorized by him to the sale of arrack of 30° U. P. In places where there are no shops for the vend of foreign liquors or where the foreign liquor shop-keepers do not undertake to sell double-distilled or rectified country spirits and special liquors such as Brandy, Whisky, Gin, etc., of such strength as may be fixed by the Excise Commissioner, manufactured at the Government Central Distillery, Bangalore, the holder of arrack shop license of approved character may, with the sanction of the Excise Commissioner, be permitted to sell the same in duly corked sealed bottles not to be drunk on the premises, at such prices as may be fixed by the Excise Commissioner, and subject to conditions otherwise applicable to the sale of arrack.

(5) The lease shall not be transferable by sale, gift or otherwise or be sub-rented except with the permission of the Excise Commissioner, nor if the Deputy Commissioner so orders may any agent be appointed for the management of any privilege without his previous approval. All engagements entered into by the agent shall be deposited with the Deputy Commissioner within one month from the date of execution.

(6) Application for resignation of shop or group of shops will be summarily rejected by the Deputy Commissioner.

(7) The manufacturers of arrack or double-distilled or rectified country spirits or other special liquors as well as the licenses of arrack Bonded Depots are prohibited from holding any interest in the retail vend of the abovementioned spirits or from employing any person who has such interest.

(8) The sale or transport of arrack by persons suffering from leprosy or any contagious disease and the employment of such persons in the shop are prohibited.

(9) The license-holder shall purchase from the Bonded Depots established molasses arrack at 8½ annas per gallon of 20° under-proof, jaggory arrack in duly corked sealed bottles at Rs. 1-6-6, and also special liquors referred to above, at such prices as may be fixed by the manufacturers.

(10) The licensee shall sell molasses arrack to the public at Rs. 6-6-0 per gallon of 20° under-proof (*i. e.*, at annas two per dram which is equal to 1—51st part of a gallon) and jaggory arrack at Rs. 1-3-10 per reputed quart bottle and at proportionate rates for lower strengths.

(11) The licensee of every shop in the Cities of Bangalore and Mysore shall pay a registration fee under the Municipal Regulations at the rate of Rs. (180) one hundred and eighty per annum in advance for the period of the license for his shop, and he shall pay a surcharge of (4) four annas per gallon on all arrack sold by him in excess of 55 gallons a month in each such shop.

(12) The above rates to be charged for molasses arrack, jaggory arrack, double distilled or rectified country spirits or other special liquors by the manufacturers and the above fees are in addition to excise duty, which shall be prepaid at the prescribed rate of Rs. 4-12-0 (including local cess) per gallon of 20° U. P. and proportionately for higher or lower strengths, before the removal of the liquor from a Bonded Depot established under the sanction of Government.

(13) The licensee shall pay the above duty and price into a Taluk Treasury or to a special shroff, if any, appointed on this behalf at the cost of Government, and located at the Taluk Cutcherry to receive such duty and price *daily* including Sundays and holidays or to such other officer as may be appointed by the Deputy Commissioner, and shall obtain a receipt in the prescribed printed form. On production of such receipt and an indent for the supply of the liquor covered by the receipt, the Bonded Depot-keeper shall issue the quantity of liquor equal to the amount of duty and price shown in the said receipt which will be forwarded to the Excise Commissioner's office under the endorsement of the Bonded Depot-keeper aforesaid, as to the date and hour when the liquor was issued. The Depot-keeper aforesaid shall issue a pass in the prescribed form for the transport of liquor from the Bonded Depot. He shall also issue sample bottles with the consignments in such manner as may be ordered by the Excise Commissioner.

(14) The licensee shall be bound to take over any liquor which may remain as stock in hand belonging to the out-going licensee on 1st July 1906, in the shop, paying him such compensation for the same as may be fixed by the Excise Commissioner.

(15) The licensee shall possess or use on any licensed premises only such standard measure as may, from time to time, be prescribed by the Excise Commissioner. The officers authorized to inspect licensed shops are empowered to enter and examine the premises, to test the measures in use and the liquor under sale and to call for and check the accounts kept in the shops.

(16) The licensee shall be bound by the provisions of the Excise Laws and rules in force and by any additional rules which may, from time to time, be prescribed under the Excise Laws, and if so required, deliver up his license for amendment or issue of a fresh one.

(17) The Deputy Commissioner may, whenever he thinks fit, direct shops to be closed, or permit transfer of shops from one place to another, provided the distance is not more than 200 yards, or direct new shops to be opened with the previous sanction of the Excise Commissioner.

(18) Persons who purchase group of shops may, with the special permission of the Excise Commissioner, who is at liberty to refuse it, and under a license by a competent authority open a depot and remove thereto liquor purchased from the Bonded Depot and issue therefrom the requisite supply to their shops.

(19) The licensee of shop or group of shops shall not, during the term of the license, have any interest in the exclusive privilege of vending toddy or foreign spirits or liquors or both within 5 miles from it, nor permit any person having interest in the exclusive privilege of vending toddy or foreign spirits or liquor or both within the said area, to hold any share or interest in his exclusive privilege of selling country liquor; nor shall he, during the term of his license, without the written permission of the Excise Commissioner, have any interest, direct or indirect, in any arrack farm in any districts of the Madras or Bombay Presidency under the British Government or any other Foreign State or Territory, or Civil and Military Station, Bangalore.

(20) An Inspection note book with the pages numbered consecutively for inspecting officers to enter their remarks shall be maintained and be handed over to the Excise Inspector in charge of the Range or any officer authorized by him to receive it on a receipt being given therefor.

(21) If the licensee shall be convicted on prosecution before a Magistrate of any offence against the Excise Regulation, or Opium Act or other law for the time being in force, which in the Deputy Commissioner's opinion renders him unfit to hold the license, it shall be lawful for the Deputy Commissioner to declare his license forfeited and sell or otherwise dispose of the privilege at the risk of the licensee.

(22) All sums payable by the licensee may be deducted from the amount of his deposit or recovered by attachment and sale of the property of the licensee or his surety, under any law for the time being in force for the recovery of arrears of land revenue.

(23) The license-holder or vendor or vendors shall not sell nor give any arrack exceeding one reputed quart to any individual to convey out of any licensed shop or premises without a valid permit.

(24) The shop-keepers shall not sell or give any arrack to any European non-commissioned officer, private or soldier, or to any European or Eurasian camp follower, or to any member of the families of any of the aforesaid persons, without the permission in writing of the Commanding Officer or of some person duly authorized by him in that behalf; nor to any European sailor, nor to any sepoy, member of the Police force or Excise staff or servant of a Railway Company, whilst on duty; nor to any European vagrant under escort of Police; nor to any child under fourteen years of age; nor to any insane person for consumption on the premises; nor shall they sell any arrack on credit.

(25) They (license-holder or vendor or vendors) shall not receive any articles whatsoever in barter or pledge. Payment for arrack shall be received by them in ready money only, and they shall be bound to give intimation of the offer of anything other than cash to the nearest Magistrate or Police Officer. They shall have no pecuniary dealings with any Excise Officer.

(26) The arrack kept in his shop, offered for sale and sold, shall be unadulterated and undiluted; and it shall be of the same quality and

strength as issued from the Bonded Depot. With all consignments from the Depot to the shop, sample bottles shall be taken in such manner as may be ordered by the Excise Commissioner.

(27) No consignments of arrack received at the shop, and which have been transported through British Territory, shall be opened before they have been verified by the officers authorized to do so.

(28) No water or other beverage, or liquor other than arrack of any quantity whatever shall be kept or sold in the shop in which arrack is sold, or on the person or in possession of the license-holder or vendor or any of his employees in the shop. No ingredients noxious to health shall be added to it either to increase its intoxicating power or for any other purpose. All officers authorized to inspect shops and depots are empowered to detain any liquor found unfit for consumption or use and the Excise Commissioner, all Deputy Commissioners, Deputy Excise Commissioner and Excise Assistant Commissioners are authorized to destroy such liquor.

(29) No robbers or thieves or disorderly or riotous persons or prostitutes or soldiers or others known or believed to be deserters shall be harboured in the shop, and gaming, disorderly conduct, etc., therein shall be prevented, and information of their resort shall be given to the nearest Magistrate or Police Officer. No person shall be harboured during night in any shop.

(30) The license-holder shall fix in a conspicuous place outside of his shop a board on which shall be legibly printed in local vernacular his name and the number of his license and the articles he is licensed to deal in and the current rate of sale; the license must be hung up in a conspicuous place within.

(31) True account of receipts and issues of liquor shall be maintained from day to day in ink in the prescribed form. The accounts and permits shall be in printed books which may be obtained form local Excise Officers on payment of cost price. Permits for liquor received and the counterfoils of permits issued must be carefully filed. The signing of blank permits for subsequent issue is prohibited. The accounts and counterfoils of permits shall be preserved and delivered to the local Excise Officer immediately after the close of the lease. They shall be produced when asked for by the Deputy Commissioner or any officer appointed by him or by an Excise Officer not below the rank of Excise Assistant Inspector. The licensee shall be bound to furnish such returns and information as may, from time to time, be required by the Deputy Commissioner or Excise Officer not below the rank of Excise Assistant Inspector.

(32) The amount of fees payable for the shops under Condition 11 above, shall, in the Towns of Bangalore and Mysore, be paid to the Officers appointed by the President, Municipal Commission, to receive the same.

(33) The following stock or such stock as the Excise Divisional Officer may consider sufficient to meet local requirements shall always remain on hand and not be trenched upon :—

	Arrack	Remarks
I At all District Head-quarters	2 Gallons	
II At all Taluk and Depot Kasabas...	1 Gallon	
III Village shops within five miles from Depot	½ Gallon	
IV Village shops more than five miles distant from Depot...	Stock equal to one day's sale for every ten miles from Depot and not less than the stock fixed for shops within five miles of the Depot.	

The shop shall be kept open during the authorized hours unless its temporary or permanent closure is authorized by the Deputy Commissioner.

(34) The shop shall be closed by *9 P.M., and not be opened before sunrise except on special permit in cases of festivals, etc. The Deputy Commissioner or Assistant Commissioner in charge of the taluk may direct that all shops for the sale of arrack on or adjacent to the line of march shall be closed whilst a detachment of European or Native soldiers is passing or encamped in the vicinity. The Government reserves the power to terminate the lease on public grounds on giving the licensee fifteen days' notice and awarding a reasonable compensation to the licensee. The licensee will have no claim to compensation or remission on account of any arrangements which may be made by Government in regard to Country Beer or other description of liquor than arrack.

(35) The sales should be conducted in a suitable building which shall have only one door, and no windows shall be allowed to the rear or ends of the building. The bar where the liquor is sold shall be opposite the entrance door and so situated that all persons inside can be seen by any one passing to and fro in the street, and no second room shall be allowed to or be kept open for customers.

(36) The right is reserved to the Deputy Commissioner to grant occasional licenses for the sale of liquor on the occurrence of fairs, festivals, etc., in places in the vicinity of which there are no regularly licensed shops. Such licenses shall ordinarily be granted to the shop-keepers who usually supply the locality. Their period shall not exceed fifteen days and the fee to be paid therefor shall be fixed at the Deputy Commissioner's discretion unless he decides to sell the same by public auction.

(37) If it comes to the licensee's knowledge that any person employed by him in the carriage or sale of arrack, commits any breach of the Excise Laws or of the engagements entered into by him, it shall be his duty to report the matter to the Deputy Commissioner, and comply with the directions of the Deputy Commissioner respecting the continued employment of such person.

(38) No person who has been convicted of a heinous offence under the Indian Penal Code shall be employed in the carriage or sale of liquor without the Deputy Commissioner's previous permission.

(39) In case of any breach of the above conditions either by the licensee or, with his connivance and privity, by any person in his employment, or in the event of the licensee neglecting to open his shop, or to carry on the business of his shop with due care and attention, it shall be competent to the Deputy Commissioner to impose upon the licensee a fine not exceeding Rs. 50 for every such breach or for such neglect, or, at the option of the Deputy Commissioner, to declare the money deposited with him forfeited, and to cancel the license and re-sell the shop or to otherwise dispose of it at the risk of the licensee, or to place the shop under the management of Government; and all loss thereby caused, together with all losses accruing to Government in consequence of the licensee's neglect to carry on his business with due care and attention and to open his shop on 1st July 1906, shall be made good by him. When a license is cancelled, the rent for the whole period of the shop shall become due at once. All such amounts of penalties and losses shall be recovered in the same manner as if they were arrears of land revenue.

(40) The imposition of a fine or the forfeiture of deposit or the cancellation of the license under the last preceding para, shall not be held to prevent the prosecution of the licensee or his agents or employees for any offence punishable under the Excise Laws or other law for the time being in force.

NOTE.—For continuing breaches of a license, continuing fines may be imposed.

* 9·30 P.M. in the City of Bangalore.

DATES OF SALE.

District	Taluk	Date
		May 1906
Bangalore.	Bangalore City	1
	Bangalore Taluk	2
	Anekal	4
	Hoskote	8
	Devanhalli	10
	Dodballapur	12
	Nelamangala	14
	Magadi	16
	Channapatna	19
	Kankanhalli	21
		May 1906
Kolar.	Goribidnur	3
	Bagepalli	7
	Chikballapur	9
	Sidlaghatta	11
	Chintamani	15
	Srinivaspur	17
	Mulbagal	19
	Kolar	21
	Malur	23
	*Kolar Gold Fields	25
	Bowringpet	26
		May 1906
Hassan.	Belur	1
	Manjarabad	3
	Arkalgud	7
	Hole-Narsipur	9
	Hassan	11
	Channarayapatna	14
	Arsikere	17
		May 1906
Kadur.	Kadur	19
	Tarikere	21
	†Yedahalli	23
	Koppa	25
	Mudgere	28
	Chikmagalur	31

District	Taluk	Date
		May 1906
Tumkur.	Kunigal	8
	Tumkur	10
	Gubbi	12
	Tiptur	16
	Chiknayakanhalli	19
	Sira	23
	Maddagiri	25
	Pavagada	28
		April 1906
Mysore.	Yedatore	24
	Hunsur	26
	Heggaddevankote	28
	Nanjangud	30
		May
	Gundlupet	2
	Chamrajnagar	4
	Yelandur	7
	T.-Narsipur	9
	Malvalli	11
	Mandya	14
	Seringapatam	16
	Krishnarajpete	18
	Nagaman	21
	Mysore City and Taluk	23
		May 1906
Shimoga.	Shimoga	4
	Tirthahalli	8
	Nagar	10
	Sagar	12
	Sorab	14
	Shikarpur	16
	Honnali	18
	Channagiri	21
		May 1906
Chitaldrug.	Hosdurga	8
	Holalkere	10
	Davangere	12
	Jagalur	15
	Molakalmuru	17
	Challakere	19
	Hiriyur	22
	Chitaldrug	25

* Gold Fields Magistrate's Court.

† Deputy Amildar's Office.

SALE OF DRUG SHOPS FOR 1906-07.

Notice No. 2215, dated 21st March 1906.

1. Notice is hereby given that the exclusive privilege of selling intoxicating drugs in each of the shops specified in the schedule* hereto appended, for the twelve months beginning with 1st July 1906 and ending with 30th June 1907, will be put up to public auction by the respective Deputy Commissioners or by Assistant Commissioners specially authorized by the Deputy Commissioners for the purpose, at the respective taluk or sub-taluk head-quarters, on the dates specified in the annexed statement, subject to the conditions hereinafter set forth.

2. Each bidder at the auction will deposit a sum of Rs. 5, or such other reasonable amount as may be fixed by the officer conducting the sale, previous to bidding, provided that the Government may at any time dispense with such initial deposit. Each shop will be knocked down to the approved highest bidder, subject to formal confirmation by the Deputy Commissioner, who will be at liberty to accept or reject the bid at discretion without assigning reasons for the same. Such formal confirmation will, *unless revised by Government*, be tantamount to an acceptance of the bid. Parties intending to bid must attend either in person or by duly accredited agents. No shop shall be knocked down in the name of more than one person or of more than one company or firm duly represented. The selling officer shall refuse to register as purchaser any one in whose name the bidding has not proceeded.

3. As soon as the auction is completed, the deposits made by the unsuccessful bidders and not forfeited as hereinafter provided, will be returned to them. As the auction proceeds, the person whose bid is accepted for each shop shall at once deposit a sum equal to $\frac{5}{8}$ths of a month's rent for that shop. Should he fail to do so, the deposit made by him under para 2 will be forfeited, the shop will at once be put up again on the above conditions, and he will be debarred from bidding again for the same or for any other shop.

4. The persons to whom the shops have been knocked down, and who have made deposits as provided in paras 2 and 3, shall also be required to leave his address with the sale conducting officer in order that the confirmation of the sale may be communicated to that address by a notice, etc., and he shall, within 7 days, after the service of the said notice by its presentation to the purchaser or any adult male member in the place of the said address or by its being affixed thereto or by its forwardal duly registered by post, pay at the Taluk Treasury concerned such further sum as, with the first and second deposits, will make up an amount equal to two months' rent of each shop knocked down to them; and shall take out licenses and execute a counterpart engagement, in the prescribed forms, on the conditions hereinafter set forth. On the failure of any person to make the deposit or to take out license or to execute the counterpart engagement, as aforesaid, the shop will be re-sold at the risk of such person, or if the auction hereby notified has already been completed, will be otherwise disposed of at the discretion of the Deputy Commissioner. In the case of the purchaser's death after the confirmation of the sale, it will be binding on his heirs or assigns.

5. Re-sales effected under para 4 will be at the risk of the defaulting bidder, who will forfeit all gain; and in the event of a loss by re-sale or other disposal he will make good the deficiency between the total amount payable for the whole period under the terms of the original sale and the total amount payable by the successful bidder at the re-sale or other disposal. In the latter case, the forfeited deposit will be deducted from the loss arising from the re-sale and the remainder, if any, will be recovered from the bidder in the same manner as if it were an arrear of land revenue. Should, however, the forfeited deposit be greater than the loss by re-sale, the whole of such deposit will be credited to Government.

6. The license to be taken out under para 4 above, shall be subject to the following conditions, namely :—

(1) The amount for which the privilege has been purchased shall be payable into the Taluk Treasury on the prescribed challan in equal monthly instalments commencing from July 1906; each instalment shall be regarded as the rent for the month in respect of which it is payable.

* For Schedule see supplement to the *Mysore Gazette*, dated 5th April 1906.

Each month's rent shall be payable on or before the 20th of the same month on the challan prescribed for the purpose. If such amount be less than Rs. 12, it shall be paid up in not more than three quarterly instalments commencing from 1st July 1906. The deposit of two months' rent made by the licensee, will be taken in payment of the rents due for the last two months of the period of the license. Failing payment by the 20th of the same month or before the end of the quarter for which the instalment is due, the Amildar may, with the sanction of the Deputy Commissioner by record in writing, suspend or cancel the license or order the forfeiture of all deposits made by the defaulter and proceed to re-sell or otherwise dispose of the shop at the defaulter's risk (as soon after the last day of the month or quarter as may be possible) with effect from date of issue of license to the new purchaser or from the date of other disposal. No remission or abatement of the rent shall, on any account whatever, be claimable by the licensee.

(2) The licensee shall purchase Ganja and Majum from any Bonded Depot at the rates of Re. 0-13-4 and Re. 0-5-4, respectively, per seer of 80 tolas; and shall pay the price to the Mutsaddi in charge of the Depot.

(3) The rates payable as above, shall be in addition to Excise duty, which shall be prepaid into the Taluk Treasury, or into any other Government Treasury with the permission of the Deputy Commissioner, at Rs. 3-6-8 per seer of Ganja and Re. 0-11-8 per seer of Majum, (including local cess).

(4) The Ganja sold by the licensee, shall be of good quality and unadulterated, and it shall be sold by him at Rs. 10 for a seer of 80 tolas of Ganja or annas 2 per tola of Ganja and of Rs. 1-10-8 for a seer of Majum; and the whole stock of Ganja and Majum on hand shall be kept in the licensed shop and not elsewhere on any pretext whatever, without special permission.

(5) The licensee shall use such scales and weights as may from time to time be prescribed by Government, and provide himself with the printed forms of accounts and permits or passes for transport of Drugs, which forms shall be purchased from local Excise Officers.

(6) The licensee shall be bound to take over any Drugs which may remain as stock in hand belonging to the out-going licensee on the 1st July 1906 in the existing shop, paying to the latter such compensation for the same as may be fixed by the Deputy Commissioner.

(7) The licensee shall be bound by the rules in force, and by such further rules as may be issued from time to time by Government. He shall not during the term of his license, without the written permission of the Excise Commissioner, have any interest direct or indirect in any intoxicating drug shop outside the Mysore State or in the Civil and Military Station.

(8) No female shall be employed in the sale of intoxicating drugs.

(9) The remaining terms and conditions shall be as set forth in the prescribed license.

7. In the case of any breach of the above conditions either by the licensee, or with his connivance and privity, by any person in his employment, or in the event of the licensee neglecting to open his shop or to carry on his business with due care and attention, it shall be competent to the Deputy Commissioner to impose upon the licensee a fine not exceeding Rs. 10 for every such breach or neglect, or at the option of the Deputy Commissioner to declare the money deposited with him forfeited, and to cancel the license and to re-sell or to otherwise dispose of the privilege at the risk of the licensee; and all loss thereby caused, together with the loss accruing to Government in consequence of the licensee not carrying on his business by opening his shop on 1st July 1906, shall be made good by him. When a license is cancelled, the rent for the whole period of the license shall become due at once, which shall be recovered together with all losses as if they were arrears of land revenue.

8. The penalties laid down in the last preceding clause shall not exempt the licensee or his employees from prosecution for any offence committed against the Excise laws or rules in force.

DATES OF SALE.

District	Taluk	Date
		May 1906
Bangalore	Bangalore City and Bangalore Taluk ...	1 & 2
	Anekal	4
	Hoskote	8
	Devanhalli	10
	Dodballapur	12
	Nelamangala	14
	Magadi	16
	Channapatna	19
	Kankanhalli	21
		May 1906
Kolar	Goribidnur	3
	Bagepalli	7
	Chikballapur	9
	Sidlaghatta	11
	Chintamani	15
	Srinivaspur	17
	Mulbagal	19
	Kolar	21
	Malur	23
	Kolar Gold Fields*	25
	Bowringpet	26
		May 1906
Hassan	Belur	1
	Manjarabad	3
	Arkalgud	7
	Hole-Narsipur	9
	Hassan	11
	Channarayapatna...	14
	Arsikere	17
		May 1906
Kadur	Kadur	19
	Tarikere	21
	Yedahalli †	23
	Koppa	25
	Mudgere	28
	Chikmagalur	31

District	Taluk	Date
		May 1906
Tumkur	Kunigal	8
	Tumkur	10
	Gubbi	12
	Tiptur	16
	Chiknayakanhalli	19
	Sira	23
	Maddagiri	25
	Pavagada	28
		April 1906
Mysore	Yedatore	24
	Hunsur	26
	Heggaddevankote...	28
	Nanjangud	30
	Gundlupet	May 2
	Chamrajnagar	4
	Yelandur	7
	T.-Narsipur	9
	Malvalli	11
	Mandya	14
	Seringapatam	16
	Krishnarajpete	18
	Nagamangala	21
	Mysore City and Taluk	23
		May 1906
Shimoga	Shimoga	4
	Tirthahalli	8
	Nagar	10
	Sagar	12
	Sorab	14
	Shikarpur	16
	Honnali	18
	Channagiri	21
		May 1906
Chitaldrug	Hosdurga	8
	Holalkere	10
	Davangere	12
	Jagalur	15
	Molakalmuru	17
	Challakere	19
	Hiriyur	22
	Chitaldrug	25

* Gold Fields Magistrate's Court.

† Deputy Amildar's Office.

SALE OF COUNTRY BEER TAVERNS IN THE BANGALORE CITY AND IN THE BOWRINGPET TALUK FOR 1906—07.

Notice No. 2216, dated 21st March 1906.

1. Notice is hereby given that the exclusive privilege of selling Country Beer or Porter in each of the taverns specified in the appended schedule,* for the twelve months beginning with 1st July 1906 and ending with 30th June 1907, will be sold by public auction on the dates and at the places mentioned in the annexed schedule by the Deputy Commissioner of the District concerned or other officer authorized by him.

2. The exclusive privilege will be put up to auction at the upset price fixed at Rs. 35 per hogshead of Beer or Porter which will be sold in the taverns at Bowringpet and the Kolar Gold Fields and at the upset price fixed for each of the taverns in the City of Bangalore by the officer conducting the sale with the previous sanction of the Excise Commissioner.

3. The manufacturers of Beer may bid for or purchase the taverns.

4. Each bidder at the auction shall deposit a sum of Rs. 250 for shops in Bowringpet Taluk and Rs. 100 for those in Bangalore or such other reasonable amount as may be fixed by the officer conducting the sale, previous to bidding. Each tavern will be knocked down to the approved highest bidder, subject to the formal confirmation by the Deputy Commissioner, who will be at liberty to accept or reject the bid at discretion, without assigning reasons for the same. Such formal confirmation will, unless revised by Government, be tantamount to an acceptance of the bid. Parties intending to bid must attend either in person or by duly accredited agents.

5. As soon as the auction is completed, the deposits made by the unsuccessful bidders and not forfeited as hereinafter provided, will be returned to them.

6. The persons to whom the taverns have been knocked down, shall be required to leave his address with the sale-conducting officer in order that the confirmation of the sale may be communicated to that address, and within seven days after service by the said notice by its presentation to the purchaser or any adult male member of the family at the place of said address or by its being affixed thereto or by its forwardal duly registered by post, deposit such further sum as, with the first deposit, will make up a total security of Rs. 500 for each tavern knocked down to them or such other reasonable amount as may be fixed by the Deputy Commissioner according to the value of each tavern; and shall take out licenses and execute counterpart engagements, on the conditions hereinafter set forth. On the failure of any person to make the deposit or to take out license or to execute the counterpart engagement, as aforesaid, the tavern will be re-sold at the risk of such person, or if the auction hereby notified, has already been completed, will be otherwise disposed of at the discretion of the Deputy Commissioner. In the case of the purchaser's death after the confirmation of the sale, it will be binding on his heirs or assigns.

7. Re-sales effected under para 6 *supra*, will be at the risk of the defaulting bidder, who shall forfeit all gain; and in the event of a loss by re-sale or other disposal he shall make good the deficiency between the total amount payable for the whole period under the terms of the original sale and the total amount payable by the successful bidder at the re-sale or by disposal otherwise. In the latter case, the forfeited deposit shall be deducted from the loss arising from the re-sale or other disposal, and the remainder, if any, shall be recovered from the bidder in the same manner as if it were an arrear of land revenue. Should, however, the forfeited deposit be greater than the loss by re-sale or other disposal, the whole of such deposit shall be credited to Government.

8. The license to be taken out under para 6 above, shall be subject to the following conditions, namely:—

(1) The privilege conferred by the license extends to the sale of Country Beer or Porter brewed on the Nilgiris in breweries which may be approved of by the Government or by Messrs. Meakin & Co., Kirkee, or by Messrs. Abraham and Gangadhara Chetty & Co., Bangalore, or in any other Brevery approved by Government.

* For Schedule see supplement to the *Mysore Gazette*, dated 5th April 1906.

(2) Each tavern shall be maintained in or close to the existing tavern as described in the schedule hereto appended.

(3) The amount payable for each month on account of the number of hogsheads of Beer or Porter sold, shall be paid into the Taluk Treasury in the first week of the following month, on the challan prescribed for the purpose. The security deposit shall be taken towards the amount due for the last two months of the period of the lease. Failing payment as above, the Deputy Commissioner shall at once proceed to recover the arrears together with interest at 6 per cent, under the rules in force for the collection of land revenue. No remission or abatement of the Government dues shall, on any account whatever, be claimable by the licensee.

(4) The licensee shall further pay a duty of two annas for every gallon of Country Beer or Porter purchased by him, together with local cess at one anna per rupee.

(5) The consignment of Country Beer or Porter purchased by the licensee, shall be sent direct from the Brewery to the Amildar of the Taluk. The letter of advice covering the consignment shall be in duplicate, the original being sent to the Amildar of the Taluk, and the duplicate to the Excise Commissioner. On the duty together with local cess at the abovementioned rate being paid by the licensee on the prescribed challan, the Amildar shall allow the licensee to remove the consignment to his tavern upon a pass signed by the Amildar or other officer authorized on this behalf.

(6) The licensee of every tavern at the Bangalore City shall pay a registration fee under the Municipal Regulation, at the rate of Rs. 180 per annum in advance for the period of the license for his tavern.

(7) The licensee shall use such measures as may from time to time be prescribed by Government, and provide himself with the printed forms of accounts and permits or passes for transport of Beer or Porter, which forms shall be purchased from local Excise Officers.

(8) The licensee shall be bound to take over any Beer or Porter which may remain as stock in hand belonging to the out-going licensee on the 1st July 190 in the existing tavern, paying to the latter such compensation for the same as may be fixed by the Excise Commissioner.

(9) This lease shall not be transferable by sale, gift, mortgage or otherwise without the previous sanction of the Excise Commissioner.

(10) The Vendor shall equally with the license-holder be responsible in the penalties herein set forth for breach of any of the conditions of the license.

(11) He shall sell Beer or Porter of approved quality. It may be sold to be drunk on the premises up to one reputed quart bottle at a time. It may be sold to be removed off the premises upon the prescribed special passes up to one Imperial gallon (4 seers).

(12) He shall not sell or give Beer or Porter in any quantity whatever directly or indirectly to any European or non-commissioned officer or private or soldier, nor to any European or East Indian woman connected with or related to, men of these classes, nor allow him, her, or them, to drink Beer or Porter in his premises or grounds; he shall not permit drunkenness or disorderly behaviour in his shop or premises, and shall not suffer any gambling whatsoever therein, and shall not knowingly permit prostitutes or persons of notoriously bad character to meet or remain therein; he shall not wilfully harbour or conceal therein soldiers or others knowing or having reason to believe such soldiers or others to be deserters; he shall give information of suspicious characters to the Magistrate or Police Officer; and he shall not sell or give Beer or Porter to any Police Officer, Railway servant, or Excise Officer, whilst on duty or to insane person.

(13) He shall fix in a conspicuous place outside of his shop a board on which shall be legibly painted his name, Vendor's name, the number of his shop, and the article he is licensed to deal in.

(14) He shall not receive any articles whatsoever in barter or pledge and payment for Beer or Porter shall be made in ready money only at one and a-half rupee per imperial gallon and proportionately for fractions thereof.

(15) The Beer or Porter sold under this license shall contain 75 per cent of malt or any of the preparations of malt and 3 lbs. of good Kent hops per hogshead, and shall be of the same quality and density as purchased from the Brewer, without dilution or adulteration. The original gravity of the Beer wort shall not exceed 1070 at 60° Fahrenheit. The Beer or Porter sold shall not contain more than 8 per cent alcohol by volume. The licensee will be bound to pay duty, together with local cess, at the prescribed rate per gallon of proof spirit on all alcohol in the Beer or Porter in excess of 8 per cent by volume, besides being liable for prosecution. Samples of such Beer or Porter shall be sent duly bottled from the Brewery or tavern for examination and test whenever required by the Excise Department.

(16) Any Magistrate having local jurisdiction, or any officer acting under his warrant, or any Abkari or Excise officer shall be allowed entry to the shop at any hour to test the Beer or Porter on the premises, and examine the shop accounts, which it shall be the duty of the License-holder and Vendor to keep and produce. Such accounts shall be true and correct, and written up daily in the prescribed forms. All condemned Beer shall be destroyed.

(17) He shall close his shop by 9 P.M., and not open it before sunrise except on special permit in cases of Native festivals, etc.

(18) Beer brought for the Commissariat Department and rejected by the Military or other Departments, shall not, under any circumstances, be forwarded for sale in the tavern.

(19) The shop shall have only one door, and no window be allowed to the rear or ends of the building; the bar where the liquor is sold from, shall be opposite to the entrance door, and so situated that all persons inside can be seen by any one passing to and fro in the street; and no second room shall be allowed to be kept open for customers.

(20) The licensee shall be bound by the rules in force, and which may be issued from time to time by Government.

9. In the case of any breach of the above conditions either by the licensee, or with his connivance and privity by any person in his employment, or in the event of the licensee neglecting to open his tavern or to carry on his business with due care and attention, it shall be competent to the Deputy Commissioner to impose upon the licensee a fine not exceeding Rs. 10 for every such breach or neglect, or at the option of the Deputy Commissioner, to declare the money deposited with him forfeited, and to cancel the license and to re-sell the privilege or to otherwise dispose of it at the risk of the licensee; and all loss thereby caused, together with the loss accruing to Government in consequence of the licensee not carrying on his business by opening his tavern on 1st July 1906 shall be made good by him. When a license is cancelled, the rent for the whole period of the lease shall become due at once, which shall be recovered together with all losses as if they were arrears of land revenue.

10. The penalties laid down in the last preceding clause shall not exempt the licensee or his employees from prosecution for any offence committed against the Excise Laws in force.

BEER SCHEDULE FOR THE YEAR 1906-07.

Name of Taluk	Serial No. of tavern	Situation of the tavern		Names of the present license-holders	Consumption					Rental					License fee payable on each Hogshead of 54 gallons per highest bid				Place of sale	Date of sale	Remarks
			Locality		1901-02.	1902-03.	1903-04.	1904-05.		1901-02.	1902-03.	1903-04.	1904-05.	1905-06.	1902-03.	1903-04.	1904-05.	1905-06.			
1	2	3	4	5	6	7	8	9	10	11	12	13	14	15	16	17	18	19	20	21	22
					Hogs	Hogs	Hogs	Hogs	Hogs	Rs.	Rs.	Rs.	Rs.	Rs.	Rs.	Rs.	Rs.	Rs.			
Bangalore	1	42	Mysore road	Rangaswamy Mudaliar.	49	30	...	...	...						...	...	...	...	Bangalore Taluk Cutcherry	1st and 2nd May 1906	
Do	2	85	Arlepet tank road	Momnadi Pille ...	...	...	..	...	...	1400	2,200	...	...	...	...	...	...	...			
Do	3	2	Avenue road, Yelahanka gate ...	Do	...	...	...	..	...						..	...	...	...			
Bowringpet ...	1	...	Robertsonpet	Punyakoti Mudaliar ...	...	432	445	90	78·32	...	..	...	...	...	47	56	68	61	Gold Fields Magistrate's Court	25th May 1906	
Do	2	...	Bowringpet	Do	...	44	24	6	5·22	...	...	...	..	...	43	50½	55	46			

SALE OF TODDY SHOPS FOR 1906-07.

NOTIFICATION No. 2214, DATED 21ST MARCH 1906.

1. It is hereby notified that the exclusive privilege of selling toddy in each shop or group of shops specified in the appended Schedule,* for one year, beginning with 1st July 1906 and ending with 30th June 1907, will be put up to public auction at upset prices by the respective Deputy Commissioners or by Revenue Assistant Commissioners or Divisional Officers of the Excise Department or other officers specially authorized by the Deputy Commissioners for the purpose, on the dates mentioned below, and at the respective Taluk or Sub-Taluk Kasabas, and, except as hereinafter provided, will be knocked down to the bidder offering the highest amount of rent above those prices. If the sales are not completed on the abovenamed days, they will be continued on the next following days (close holidays excepted). Should there be no bids for any shops singly, the officer conducting the sale shall be at liberty to revise, when necessary, in consultation with the Excise Divisional Officer, if present, the grouping of shops as specified in the Schedule hereto appended, or, if necessary, to reserve shops for which there may be no bids, for disposal hereafter, or to sell the said privilege in any particular case, by means of tenders or by private negotiation. The privilege in any Coffee Estate may be sold to the planter for a fixed amount not less than Rs. 12 per shop per annum. The shops in alienated villages shall be separately sold, and the amounts connected therewith shall be shown in the accounts under a distinct head. The sale in every case shall be subject to the conditions hereinafter set forth, and shall, *unless revised by the Government*, take effect on formal confirmation by the Deputy Commissioner who shall be at liberty to accept or reject any bid at his discretion without assigning reason for the same. Such formal confirmation will be necessary whether the sale be held by the Deputy Commissioner himself or by any other officer appointed by him. Should there be no bid above the upset price, the officer conducting the sale may lower the upset price at his discretion. The officer conducting the sale may, at his discretion and without assigning any reason, refuse to accept the bid of any person on the ground that he has been convicted by a criminal court of such an offence, or has been guilty of such an infringement of the terms of his license or of a contract under the Excise Regulation or Opium Act as to render him undesirable as a holder of a license, or on the ground that he is insolvent, or in order to prevent arrangements to the detriment of Government interests, or for any other valid reason.

2. (*a*) Parties intending to bid must attend either in person or by duly authorized agents; and no person shall be permitted to bid either on his own behalf or on account of any one else until he has made a deposit of Rs. 25 for shops in the Kolar Gold Fields and the Cities of Bangalore and Mysore and Rs. 10 for shops in other places, or such other reasonable amount as may be fixed by the officer conducting the sale. Provided that the Government may at any time dispense with such initial deposit. Such deposit will, if offered, be received within three days previous to the date of sale. Deposits made by unsuccessful bidders, if not forfeited as hereinafter provided, will be returned at the close of the sale.

(*b*) No shops or group of shops shall be knocked down in the name of more than one person or of more than one company or firm duly represented. The selling officer shall refuse to register as a purchaser any one in whose name the bidding has not proceeded.

3. (*a*) The successful bidder shall, on the exclusive privilege being knocked down to him, at once, if so required by the selling officer, or otherwise at the close of the day's sale, further deposit a sum equal to one-twenty-fourth part of his bid for the year, that is to say, one-half of the monthly rent unless the initial deposit equals or exceeds two months' rent. Should he failed to do so, the deposit, if any, made by him under clause 2 (*a*) will be forfeited, and the privilege will be sold again on the

* For Schedule see Supplemental to the *Mysore Gazette*, dated 5th April 1906.

above conditions, or otherwise disposed of at his risk, as the Deputy Commissioner or selling officer may determine.

(*b*) The person to whom a shop or group of shops has been knocked down and who has made deposits as provided above, shall be required to leave his address with the selling officer, in order that the confirmation of the sale may be communicated to that address by a notice, and he shall, within seven days after the service of the said notice by its presentation to himself or to any adult male member of his family at the place of said address or by its being affixed thereto or by its forwardal duly registered by post, pay at the Taluk Treasury concerned, such further sum as, with the former deposits, will make up an aggregate sum equal to two months' rent, and execute at the same time before the Amildar the necessary engagements and take out the necessary licenses, as hereinafter set forth.

4. (*a*) The deposit made under the preceding para shall be either in cash or in Government of India Securities duly endorsed in favor of the Deputy Commissioner. Provided that in cases where the monthly rent exceeds Rs. 10 (in lieu of a deposit of two months' rent as above), the Deputy Commissioner may, in his discretion, allow any purchaser to deposit one month's rent as above, and to furnish approved personal security for an amount equal to four months' rent. In all cases where the monthly rent does not exceed Rs. 10, a cash deposit equal to two months' rent shall invariably be taken, and no personal security shall be accepted. If, on enquiry subsequent to sale, the purchaser shall be found to be a foreigner having no property in the Mysore State, or to be of doubtful solvency he may be required to deposit twice the prescribed sum or to get a surety or sureties, residents of and possessing property in the Mysore State, to execute a security bond for the due payment of *all moneys* that may become due by him under the terms of the contract.

(*b*) Should the initial deposit exceed the sum required to be deposited under clause 3 (*b*) or clause 4 (*a*), the excess will be refunded to the purchaser.

5. The purchaser of the exclusive privilege shall execute an agreement binding himself and, unless exempted by the Deputy Commissioner by an order duly recorded, so much of his movable and immovable property as may be deemed sufficient, to observe the conditions hereinafter set forth, as well as those specified in the license to be issued to him ; and his surety, if any has been accepted under the above para, shall also execute a bond in the prescribed form binding himself and so much of his movable and immovable property as may be deemed sufficient by the Deputy Commissioner, for the due fulfilment by the purchaser of the terms of his agreement. The agreement and bond so executed shall be stamped at the expense of the purchaser. They shall also be registered at his expense when the amount secured is Rs. 100 and above.

6. If default is made in making the deposit or deposits or in executing the agreement or the security bond, if any, and in taking out licenses as aforesaid, the exclusive privilege shall be forthwith re-sold or otherwise disposed of by the Deputy Commissioner at the risk of the first purchaser, who shall forfeit to the Government any deposit or deposits already made by him, and shall further be liable to make good any loss caused by such re-sale or other disposal. He shall not be entitled to any gain accruing from the re-sale or other disposal, and he shall be debarred from bidding again for the same or for any other shop or group of shops. In the case of loss the forfeited deposits will be deducted from it and the remainder, if any, shall be recovered as if it were an arrear of land revenue. In the case of the purchaser's death after the confirmation of the sale, it will be binding on his heirs or assigns.

7. As soon as the agreements and bonds have been executed, the Deputy Commissioner will issue a license in the prescribed form, assigning to the purchaser the exclusive privilege referred to therein, subject to the following conditions ; but nothing herein contained shall exempt the purchaser of the privilege from liability to the penalties prescribed for breaches of the conditions set forth below, though a formal license may not have been issued to him :—

(1) The exclusive privilege conferred by the license extends to the sale of Date, Palmyra, Cocoanut, Bagani and Dadasal toddy. But in tracts where both Date and Bagani toddy shops exist, the licensee of the Date Toddy shop shall not tap Bagani trees and the licensee of the

Bagani Toddy shop shall not tap Date trees but both licensees can tap any of the other palm trees named above.

(2) The Deputy Commissioner shall be at liberty to issue license for the sale of foreign liquors, for the manufacture and sale of country beer, and for the manufacture and sale of arrack and other country spirits.

(3) The amount of rent shall be payable into the local Government Treasuries on printed chellans furnished for the purpose by Government, in equal monthly instalments commencing from 1st July 1906. No amount shall be paid to or received by the Excise Officers. In the malnad and semi-malnad taluks, the Deputy Commissioner may permit patels of villages who are not themselves licensees to receive payments not exceeding Rs. 50 from any individual at a time. But if the amount of annual rent for any shop does not exceed Rs. 12, the whole of it shall be paid in not more than three quarterly instalments. Each instalment shall be regarded as the rent for the month or quarter in respect of which it is payable. The licensee will make separate payment on account of local cess. Each month's or quarter's rent shall be payable on or before the 20th of the same month or before the end of the quarter. If default is made, the Amildar may, with the sanction of the Deputy Commissioner, by record in writting, suspend or cancel the license, order the forfeiture of all deposits made by the defaulter and proceed to re-sell or otherwise dispose of the shop or group of shops at the defaulter's risk (as soon after the last day of the month or quarter as may be possible), with effect from date of issue of license to the new purchaser, or from the date of other disposal. Provided, however, that instead of re-selling the same as above the Deputy Commissioner may, in his discretion, direct the Amildar to issue licenses to sub-vendors or vendors under the defaulting licensee for rents, the aggregate of which is not less than the rent the defaulting licensee had agreed to pay. The officer who has power to suspend the license may, however, at his discretion, allow sales to continue pending re-sale or other disposal of the privilege.

NOTE.—The licensee of a Jatra shop shall pay the rent thereof in full before the Jatra begins.

(4) For the supply of toddy to his shops the licensee shall have the privilege of obtaining, subject to tree-tax rules, toddy-yeilding trees in the groves assigned to his shops or groups of shops, and he shall be at liberty to manufacture toddy from the trees in private lands, under private arrangements between himself and the owners of such lands. He may purchase toddy from any licensed toddy shop-keeper on application to the Inspector, who will grant the required permits on proof of the necessity for the same. No toddy except the produce of trees marked by a proper officer and tapped under a license shall be kept in the shop or offered for sale or sold.

(5) For all toddy-yielding trees, tree-tapping licenses shall be annual. For the convenience of the licensee, the applications for tree-tapping licenses will be received, trees will be marked, and licenses will be issued during the fifteen days and pots may be attached to such marked trees during the eight days immediately preceding the period to which they relate to take effect from the commencement of such period. Provided that no toddy shall be removed from the trees except during the currency of such license.

(6) (*a*) Persons applying for the issue of tree-tapping licenses will be responsible to Government for all sums payable as tree-tax on account of the trees licensed therein to be tapped and also for tree-rent in the case of trees on Government unoccupied lands and also for local cess thereon.

(*b*) On receipt of an application, the Inspector will at once take steps for the marking of the tree by an officer superior in rank to a Sub-Inspector, and for the timely issue of the license. Applicants for date trees shall get the requisite spaces on their stems prepared and point-

out to the marking officer, when required by the latter to do so, the trees applied for by them. Should they failed to do so, after reasonable notice, the tree-tax and tree-rent paid by them shall be liable to be forfeited at the Deputy Commissioner's discretion.

(7) No tree shall be tapped, nor shall toddy be drawn from any toddy tree, nor shall any pot be attached to any toddy tree until the tree has been marked by the proper officer. But the removal of leaves for the purpose of making incisions and the preparation of the spathes or incisions for the drawing of toddy is permitted as soon as the application in the prescribed form has been delivered to the Treasury concerned.

(8) (1) No tree shall be tapped for toddy without a license therefor to be obtained by payment of tree-tax at the following rates:—

Description of trees.	Rates of tree-tax including local cess per tree per annum.		
	Rs.	a.	p.
Date	1	1	0
Cocoanut	2	2	0
Palmyra	1	9	6
Bagani or sago	1	9	6
Dadasal (Arenga wightii)	0	8	6

NOTE.—The licenses will be free of tax to the Mysore Government in the cases specified in clause 15 (1) (*b*) below.

(2) In addition to the above tax, tree-rent at annas 4 per tree per annum with local cess at 3 pies thereon shall be paid for all Government trees applied for being tapped for the supply of toddy shops whether within or outside the Mysore territories or in the Civil and Military Station of Bangalore.

NOTE.—No trees upon Government occupied land can be tapped without the consent of the owner. The present arrangement as regards trees on alienated land will hold good subject, of course, to the levy by Government of tree-tax.

(9) The tree-tax shall be payable in the following instalments, unless the Excise Commissioner shall otherwise direct:—

Period within which license is applied for	Proportion of tree-tax to be paid at the time of application for license	Proportion of tree-tax to be paid on the first of the 3rd month
Between 1st July 1906 and 30th April 1907 ..	One-third ..	The remaining two-thirds.
Between 1st May 1907 and 30th June 1907 ...	The whole ...	.....

(10) (*a*) The tree-rent together with the local cess on tree-rent and also the local cess on the tree-tax for trees applied for shall be payable in full at the time of application for tapping license.

(*b*) If any instalments are not paid within the time, the license shall be liable to be cancelled or suspended under Section 26 of the Excise Regulation.

(*c*) When the licensee makes default and his shop is re-sold, his rights to and claim on Government trees cease and determine.

(*d*) In case of default, the Amildar with the Deputy Commissioner's permission will order the suspension of the tapping license till the arrears are paid up and if, after receiving notice of such suspension, the defaulter continue to tap the trees, he will be prosecuted for illicit tapping.

(11) The deposit made by the licensee will be taken as security for the due performance of the conditions of the license and if not forfeited or credited or otherwise disposed of shall be taken in payment of the instalment due in the last months or month of the period of the license.

All arrears and deficits payable by the licensee shall, with interest at 6 per cent per annum, be recoverable from him or his surety under the rules in force for the recovery of land revenue. Interest shall be calculated on all arrears from the date of default and on deficits from the date of re-sale or disposal otherwise. No remission or abatement of the rent or compensation shall, on any account whatever, be claimable by the licensee, nor will he be entitled to any compensation for any trees withdrawn or taken for the public purpose.

(12) If the Deputy Commissioner does not confim the re-sale, he may make such other arrangements as may appear advisable for the remainder of the period of the lease, in which case he shall serve a notice on the defaulting licensee informing him of the nature of the arrangements made.

(13) If the licensee of a group of shops wishes to establish a depot for depositing toddy required for distribution to his shops, he shall obtain a license for it in the prescribed form. The passes issued with the toddy transported, shall be subject to examination and check by the officers authorized in this behalf.

(14) The tree-tax on toddy produced by trees in the Madras Presidency but consumed in the Mysore State, will be credited to the Mysore Government. The rate of tree-tax to be paid in such cases will invariably be the highest in force on either side of the frontier. Tree-tax on trees in the Madras Presidency for which tapping licenses are about to be taken out by Mysore shop-keepers, must be paid in one instalment to the Amildar of the Taluk concerned in the Mysore State, who will grant a receipt in the prescribed chellan form and certify at the foot that the applicant is a person entitled to take out tree-tapping licenses. The applicant will then make his application to British authorities in accordance with the Madras Government Tree-tapping Rules, and will obtain a transport permit from the Inspector concerned in the Mysore State for the transport of the toddy drawn from the frontier to the shop or depot for which it is intended, after having complied with all requirements of the Madras Government Rules.

(15) (1) Tree-tapping licenses in the prescribed form shall be issued on the application :—

(*a*) of licensed toddy shop-keepers or of their duly authorized agents,

(*b*) of tree-owners in coffee estates, hittals and kans in the malnad free of the prescribed tree-tax for drawing toddy for *bona fide* domestic purposes as per Government Order No. 11897-906—Excise 485, dated 20th June 1898, for such number of trees as may be found necessary by the Excise Commissioner.

(2) The licenses may be issued in the name of the applicant himself or of his nominees.

(16) Applications for the grant of tree-tapping licenses must be made in the prescribed form to the Excise Inspector of the Range concerned through the local Treasury. Forms may be obtained from him or the Assistant Inspectors under him.

(17) Applications for tree-tapping licenses, for trees in occupied or alienated lands should be countersigned by the owner of the trees intended to be marked, in token of his consent. Applications for tree-tapping licenses for trees in State Forests and plantations should be countersigned by the Forest Range Officer in token of his consent.

(18) Deputy Commissioners may, subject to the orders of the Excise Commissioner from time to time, prescribe the minimum number of trees for which license will be granted, and the minimum number to be entered in a single application. They may also direct that the trees situated in one village only shall be included in an application.

(19) Every person to whom a tapping license is granted for the manufacture of toddy shall observe the following rules in tapping date trees:—

(a) Date trees shall be tapped only by professional men.

(b) Trees tapped one year shall not ordinarily be tapped the next year.

(c) Trees shall not be over-tapped or over-worked.

(d) In no date trees shall the initial incision be made at any point less than 3 feet from the ground except in places where permission is specially given by the Excise Commissioner.

(e) The depth and width of the incision shall not exceed one-third of the diameter of the tree, and the length of it shall not exceed eight inches.

(f) Every fresh incision shall not be less than one foot above the last incision except in localities where permission is specially given.

(g) The central spike-like clusters shall not be touched. Of the lateral leaves not less than two layers of leaves shall be left, reckoning from the layers immediately next to the central clusters down to the top line of the incision; or in other words, above the top line of the incision not less than eight leaves shall be left excluding the central spike-like clusters, on that face of the tree on which the incision is made.

(h) The licensee shall not cut or injure or permit to be cut or injured the trees licensed to him or any other trees.

(i) The licensee or his employer will be liable to pay a fine of one rupee for each tree in excess of three per cent of the number of trees marked for him which may die from over-tapping or careless tapping either during the lease or within six months after its expiration.

(20) The licensee shall not interfere with the persons holding license for cutting date leaves for mat-making, rope-making, basket-making, or for agricultural or other purposes, when they make use of the trees assigned for such purposes, and not received for tapping.

(21) The licensee of the depot or shop or group of shops will be required to keep true account of the receipts and issues of toddy from day to day in ink in the prescribed form. The accounts and permits shall be in printed books which may be obtained from the local Excise Officer on payment of cost price. Permits for toddy received and the counterfoils of permits issued must be carefully filed. The signing of blank permits for subsequent issue is prohibited. The accounts and counterfoils of permits shall be preserved and delivered to the local Excise Officer immediately after the close of the lease. They shall be produced when asked for by the Deputy Commissioner or any officer appointed by him or by an Excise Officer not below the rank of an Excise Assistant Inspector. Such returns and information as may be required by the Deputy Commissioner or Excise Officer not below the rank of an Excise Assistant Inspector shall be furnished by holders of licenses without delay.

(22) The sales must be conducted in a suitable building which shall have only one door and no windows or other opening shall be allowed to the rear or at the ends of the building. The bar at which toddy is sold shall be opposite the entrance door and so situated that all persons inside can be seen by any one passing to and fro in the street, and no second room shall be used for the sale of toddy, or be kept open for customers.

(23) Toddy shall not be sold except in shops duly licensed by the Deputy Commissioner, in the prescribed form and no new shops shall be opened without the previous sanction of the Excise Commissioner. Tree-foot sales or sales in the open, or the disposal of toddy in any other manner unauthorized by the rules, are strictly prohibited. Provided, however,

that in Bagani tracts, the licensee who has purchased the right of vend of Bagani toddy, may permit the tapping of Bagani trees for domestic consumption as well as for sale, within the limits of the village purchased by him.

(24) The Deputy Commissioner may, whenever he thinks fit, direct shops to be closed or permit transfers of shops from one place to another within two hundred yards of the sanctioned site. A sufficient supply of toddy shall be maintained in all sanctioned shops, the quantity being such as may be fixed by the Excise Divisional Officer.

(25) The licensee shall place the license granted to him in a conspicuous place in the shops.

(26) The right is reserved to the Deputy Commissioner to grant occasional licenses for the sale of toddy on the occurrence of fairs, festivals, etc., in places in the vicinity of which, there are no regularly licensed shops. Such licenses shall ordinarily be granted to shop-keepers, who usually supply the locality. Their period shall not exceed fifteen days and the fee to be paid therefor shall be fixed at the Duputy Commissioner's discretion unless he decides to sell the same by public auction.

(27) A signboard shall be affixed in a conspicuous part of the front of each shop containing, in the local vernacular, the name of the shop-keeper, number of his license and the rate at which toddy is sold by him. The sale or transport of toddy by persons suffering from leprosy or any contagious disease and the employment of such persons in the shop, are prohibited.

(28) The licensee shall prevent all drunkenness or disorder or gaming within his shops.

(29) No shop shall be opened before sunrise or kept open after 9-30 P. M. in the City of Bangalore except under special authority. The shops shall be kept open during the authorized hours, unless its temporary or permanent closure is authorized by the Deputy Commissioner.

(30) The licensee shall not harbour robbers or thieves or disorderly or riotous persons or prostitutes or soldiers or others known or believed to be deserters. No persons shall be harboured in any shop during the night, but, on the contrary, the licensee shall give intimation to the nearest Magistrate or Police Officer as to any such persons who may resort to his shops.

(31) The licensee shall not receive any grain, jewels, goods, wearing apparel, or other article in barter or in pawn for toddy, but on the offer of any such, shall give information to the nearest Magistrate or Police Officer.

(32) The licensee, vendor, or vendors shall not sell to any person more than three measuring seers of toddy to be consumed by the person at one time in the shop. He shall not allow any one to take out of his shop without a pass more than two seers or imperial quarts with the exception of bakers who are permitted to purchase and remove the quantity of toddy specified in the pass held by them. Toddy can be removed upon passes for consumption up to the limit of one imperial gallon or four seers.

(33) The distillation of spirit from toddy is absolutely prohibited.

(34) Toddy shall be sold pure as drawn from trees, and shall not be adulterated or diluted in any manner in the shops, or depots if any. No ingredient noxious to health shall be put into the toddy either to increase its intoxicating power or for any other purpose. All officers authorized to inspect shops and depots are authorized to detain any liquor found unfit for consumption or use and Excise Commissioner, all Deputy Commissioners and Deputy Excise Commissioner and Excise Assistant Commissioners are empowered to destroy such liquor.

(35) Toddy shall not be sold to the public at less than the retail rates fixed by Government as per schedule attached.

(36) The licensee shall possess or use on any licensed premises only such standard measures of capacity as may, from time to time, be prescribed by the Excise Commissioner. The officers authorized to inspect licensed

shops, are empowered to enter and examine the premises to test measures in use and the toddy under sale and to call for and check accounts in the shop.

(37) The licensee shall have such measures tested and stamped to his own expense.

(38) No toddy shall be sold or given to any European non-commissioned officer, private or solder, or to any European or Eurasian camp follower, or to any member of the families of any of the aforesaid persons, without the permission, in writing, of the Commanding Officer, or of some person duly authorized by him in this behalf; nor to any European or Eurasian sailor, nor to any sepoy, member of the Police force, Excise officer, or a servant of a Railway Company whilst on duty; nor to any European vagrant under escort of the Police; nor to any child under fourteen years of age, nor to any insane person for consumption on the premises; nor shall any toddy be sold *on credit.*

(39) The Deputy Commissioner or Assistant Commissioner in charge of the Taluk may direct that all shops for the sale of toddy on, or adjacent to, the line of march shall be closed whilst a regiment or detachment of European or Native soldiers is passing or encamped in the vicinity. Such soldiers may be supplied with toddy by such persons as the Government may select for the purpose, notwithstanding the licensee's exclusive privilege.

(40) The Government reserves the power to terminate the lease on public grounds, on giving the licensee fifteen days' notice and awarding a reasonable compensation to the licensee. The licensee will have no claim to compensation or remission on account of any arrangements which may be made by Government in regard to country beer or other description of liquor than toddy.

(41) The license shall not be transferable by sale, gift or otherwise or be sub-rented except with the permission of the Excise Commissioner. Applications for the resignation of shops in whole or in part will be summarily rejected by the Deputy Commissioner.

(42) No person shall be appointed by the licensee for the management of any such privilege without the Deputy Commissioner's previous approval.

(43) All engagements entered into by agent, shall be deposited with the Deputy Commissioner within one month from the date of execution.

(44) If it comes to the licensee's knowledge that any person employed by him in the manufacture, carriage or sale of toddy commits any breach of the Excise Law or of the engagements entered into by him, it shall be the licensee's duty to report the matter to the Deputy Commissioner, and to comply with the directions of the Deputy Commissioner respecting the further employment of such person.

(45) The licensee of shop or group of shops shall not, during the term of the license, have any interest in the exclusive privilege of vending arrack within five miles from it nor permit any person having interest in the exclusive privilege of vending arrack within the said area of five miles to hold any share or interest in his exclusive privilege of selling toddy; nor shall he, during the term of his license, without the written permission of the Excise Commissioner, have any interest, direct or indirect, in any toddy shop or farm outside the territories of Mysore, or in the Civil and Military Station of Bangalore.

(46) The licensee shall provide himself with printed forms of permits for transport and possession of toddy. Such permits shall be in the form prescribed by the Excise Commissioner, and shall be purchased from local Excise officers. He shall have no other pecuniary dealings with any Excise officer.

(47) The licensee shall pay the usual mohatarfa tax on carts used for conveying toddy but such carts shall not be impressed for Government work.

(48) In case of any breach of the aforesaid Rules or of the conditions of the license either by the licensee or with his connivance or privity by any person in his employment, or in case of the licensee neglecting to open his shops on 1st July 1906, or to carry on his business with due care and attention, it shall be competent to the Deputy Commissioner to impose upon the licensee a fine not exceeding the sum of Rs. 50 for every such breach or neglect, or at the option of the Deputy Commissioner to declare the money deposited with him forfeited, and to cancel the license, and to re-sell the exclusive privilege or otherwise dispose of it at the risk of the licensee, or to place it under the management of Government. When a license is cancelled, the rent for the whole period of the license shall become due at once; and all loss caused to Government by the cancelment of the license or by the re-sale or other disposal of the privilege shall be made good by the licensee, or his surety in the manner specified in condition 53. All sums due shall be recovered in the same manner as if they were arrears of land revenue.

(49) An Inspection note-book with the pages numbered consecutively for inspecting officers to enter their remarks, shall be maintained and be handed over to the Excise Inspector in charge of the Range or any officer authorized by him to receive it on a receipt being given therefor.

(50) The imposition of a fine, or the forfeiture of a deposit, or the cancellation of the license under the last preceding condition, shall not be held to prevent the prosecution of the licensee or his agents or employees for any offence punishable under the law for the time being in force.

NOTE.—For continuing breaches of a license, continuing fines may be imposed.

(51) No person who has been convicted of any heinous offence under the Indian Penal Code shall be employed in the carriage or sale of liquor without the Deputy Commissioner's previous permission.

(52) If the licensee shall be convicted on prosecution before a Magistrate of any offence against the Excise Regulation or Opium Act or other law for the time being in force, which, in the Deputy Commissioner's opinion, renders him unfit to hold the license, it shall be lawful for the Deputy Commissioner to declare his license forfeited or sell or otherwise dispose of the privilege at the risk of the licensee.

(53) All sums payable by the licensee may be deducted from the amount of his deposit, or recovered by attachment and sale of the property of the licensee or his surety, under any law for the time being in force for the recovery of arrears of land revenue.

(54) The licensee shall be bound by the provisions of the Excise Laws and Rules thereunder for the time being in force and by the terms and conditions of the license. The licensee shall, on requisition by the Deputy Commissioner or other officer duly authorized by him, deliver up his license for amendment or for the issue of a fresh license accordingly.

(55) In every grove where toddy-yielding trees are tapped, a ladder shall always be kept by the tap-men to enable Excise officers to examine incisions or spathes, as the case may be, or to measure the incisions.

DATES OF SALE.

District	Taluk	Date
		May 1906
Bangalore	Bangalore City	1
	Bangalore Taluk	2
	Anekal	4
	Hoskote	8
	Devanhalli	10
	Hodballapur	12
	Nelamangala	14
	Magadi	16
	Channapatna	19
	Kankanhalli	21
		May 1906
Kolar	Goribidnur	3
	Bagepalli	7
	Chikballapur	9
	Sidlaghatta	11
	Chintamani	15
	Srinivaspur	17
	Mulbagal	19
	Kolar	21
	Malur	23
	* Kolar Gold Fields	25
	Bowringpet	26
		May 1906
Hassan	Belur	1
	Manjarabad	3
	Arkalgud	7
	Hole-Narsipur	9
	Hassan	11
	Channarayapatna	14
	Arsikere	17
		May 1906
Kadur	Kadur	19
	Tarikere	21
	† Yedahalli	23
	Koppa	25
	Mudgere	28
	Chikmagalur	31

District	Taluk	Date
		May 1906
Tumkur	Kunigal	8
	Tumkur	10
	Gubbi	12
	Tiptur	16
	Chiknayakanhalli	19
	Sira	23
	Maddagiri	25
	Pavagada	28
		April 1906
Mysore	Yedatore	24
	Hunsur	26
	Heggaddevankote	28
	Nanjangud	30
		May
	Gundlupet	2
	Chamrajnagar	4
	Yelandur	7
	T.-Narsipur	9
	Malvalli	11
	Mandya	14
	Seringapatam	16
	Krishnarajpete	18
	Nagamangala	21
	Mysore City and Taluk	23
		May 1906
Shimoga	Shimoga	4
	Tirthahalli	8
	Nagar	10
	Sagar	12
	Sorab	14
	Shikarpur	16
	Honnali	18
	Channagiri	21
		May 1906
Chitaldrug	Hosdurga	8
	Holalkere	10
	Davangere	12
	Jagalur	15
	Molakalmuru	17
	Challakere	19
	Hiriyur	22
	Chitaldrug	25

* Gold Fields Magistrate's Court. † Deputy Amildar's Office.

P. N. PURNAIYA

Excise Commissioner in Mysore.

FOREST DEPARTMENT.

150

AUCTION SALE OF MYSORE ELEPHANTS

Dated 16th March 1906.

Sixty Elephants, partially broken, consisting of fine *Tuskers, Cows* and *Calves* in *excellent condition* will be sold by public auction, at Calicut, on Tuesday the 17th April 1906.

2. Terms of sale will be announced at the time of sale.
3. For further particulars, apply to

M. MUTHANNAH,
Conservator of Forests in Mysore.

Notice.

Attention of firewood sellers is hereby invited to this office Notification No.279, dated 19th March 1906, advertising the sale by tender of firewood in the Government plantations of the Malur Range.

C. SESHADRIENGAR, for *Dt. Forest Officer, Kolar Dt.*

Notification dated 1st April 1906.

It is hereby notified for information that the following quantities of timber will be sold by public auction in the Shimoga Depot on the date specified by the District Forest Officer or other officer deputed for the purpose:—

No.—1.
Name of depot—Shimoga.
Date of sale—23rd April 1906.
Teak logs—50.
Honne logs—25.
Nandi logs—150.
Matti logs—200.
Other kinds—100.
Jambe and kendala poles—300.
Teak rafters—300.
Teak reepers—Running feet 2000.
Kiral bhogi and other scantlings—70.
Remarks—More or less.

Terms of sale.—Vide Notification No. 15229—R. F. 155-92, dated 15th March 1895.

J. J. MONTEIRO,
Dist. Forest Officer, Shimoga.

POLICE DEPARTMENT.

List of property seized by the Police on 1st March 1906 during a search instituted on suspicion in the house of Sivachar Nanjiah, a resident of Dugahalli village of Yelandur Taluk.

		Rs.	a.	p.
1.	Eight good pearls which had been sold to one patel Putta Basavappa for Rs. 7	15	0	0
2.	One big copper vessel (ಹಂಡೆ) weighing about a maund	15	0	0
3.	One copper vessel (ಹಂಡೆ) somewhat new, weighing 35 seers	12	0	0
4.	One brass kolaga thapali with brass rings, weighing 30 seers	12	0	0
5.	Two small brass kolaga thapales tinkered inside and weighing 25 seers ..	8	0	0
6.	One small coppy vessel (ಹಂಡೆ) weighing about 15 seers	6	0	0
	Property found on opening a big box which was locked and kept in a room. (*In cases.*)			
7.	One pair of chendramuru (ಚಂದ್ರಮುರ) studded with red and white stones and stringled with ordinary pearls	20	0	0
8.	One pair do do ...	15	0	0
9.	One gold nagaru (ನಾಗರು) stringled with twelve gold beads and silver back weighing $4\frac{3}{4}$ tolas including sealing wax	35	0	0
10.	One eight-cornered gold savanthige huvu (ಶಾವಂತಿಗೆ ಹುವು) with silver back weighing about $10\frac{3}{4}$ tolas including wax	50	0	0
11.	One gold savanthige huvu with silver back weighing $6\frac{3}{4}$th tolas with wax ...	25	0	0
12.	One gold addige (ಅಡ್ಡಿಗೆ) weighing $7\frac{1}{2}$ tolas with wax and thread ...	80	0	0
13.	One gold bangle (ಕಪ್ಪಿ) weighing $7\frac{1}{2}$ tolas	120	0	0
14.	Two gold chowri kattu with silver back and screw (ಸುತ್ತು) weighing $5\frac{1}{2}$ tolas with wax	35	0	0
15.	One golden sara with gold beads, corals and thali weighing 6 tolas including wax	30	0	0
16.	Three strings of small gold beads with thali weighing $2\frac{3}{4}$ tolas including wax and glass beads	45	0	0
17.	One small golden savanthige huvu with silver back weighing 1 tola with wax	3	0	0

		Rs.	a.	p.
	A pair of golden ear ornaments (ಓಲಿ) each attached with two strings of tiny golden beads weighing $1\frac{3}{4}$ tolas with wax	25	0	0
	One pair of golden chalathumbu (ಚಳತುಂಬು) with ordinary pearls weighing $\frac{3}{4}$ tola	4	0	0
	One pair of golden ear ornaments (ಬುಗಡಿ) stringled with good pearls weighing $1\frac{3}{4}$ tolas	40	0	0
	One golden talisara with twelve gold beads, one tali, four corals and two stones weighing 2 tolas with wax and thread, etc.	6	0	0
	One silver waist belt with silver beads weighing $13\frac{1}{2}$ tolas	6	8	0
	Four big corals ordinary, used for haradigundu (ಹರಡಿಗುಂಡು)	13	0	0
	One silver waist thread with screw weighing nine tolas	6	0	0
	Silver bangles weighing 24 tolas	12	0	0
	One silver sivadara weighing 14 tolas	7	0	0
	Two pairs of pearl earings tied up with gold and silver wires ...	1	0	0
	One twisted silver bangle weighing $5\frac{3}{4}$ tolas	3	0	0
	A piece of gold and a sheet of gold weighing two pies in all ..	5	0	0
	One Surthi rupee and seven Raja rupees somewhat black as if it were hidden in the earth	8	0	0
	Three scales used for weighing gold and silver, one of which has a wooden case	2	0	0
	Cash tied up in a white cloth		0	0
	Cash found in a bag	43	0	0
	Cash found in a money purse	6	0	0
	Two laced chunadi (ಚುನಡಿ) turbans		0	0
	One red silk handkerchief (big) with big chowklies..	8	0	0
	Do do with small chowklies and rudrakshi ...	3	0	0
	One dhoti with silk rudrakshi border	6	0	0
	Do with silk kusambi rudrakshi border	5	0	0
	One silk bordered panche	3	0	0
	One panche with a tiny silk border	1	8	0
	One unwritten stamp paper No. 989, dated 4th October 1901, of the value of Re. 1 bearing the name of Karibasavaiya, son of Dodda Subbaiya of Malogahalli.			
	Do do No. 415, dated 1st August 1901, of the value of annas 4 bearing the name of Nanja, son of Balagai Huva of Honnur.			
	One unwritten stamp paper No. 3093, dated 14th May 1903, of the value of annas 4, bearing the name of one Bomma of Vulikebbemole.			
	Do do No. 918, dated 27th September 1901, of the value of annas 4, bearing the name of one Samba, son of Balagai Dyavara Gudda of Honnur.			
	One letter written by Madavanahalli Vustad Channasetty to Puttamarappa, brother of Duggahatti Hutchappa and posted.			
	Two letters of enquiry by Nanjaiya.			
	Total	870	0	0

C. KRISHNA RAO,
for *Supt. of Police, Mysore Dt.*

Dated 27th March 1906.

Descriptive Roll of a person found dead and unclaimed :—

Place where found—Near the School in the Channagiri town, close to the tunnel on the Channagiri-Chitaldrug road, on 9th March 1906.

Sex—Male.

Age—Forty years.

Complexion—Dark.

Height—Five feet four inches.

Marks of identification—Round face, marks of small-pox all over the body. Had torn clothes on.

Articles found near the body—An empty calabash was lying near the body.

MD. ZAHIRUDDIN MECCAI,
Superintendent of Police, Shimoga Dist.

MISCELLANEOUS.

BANGALORE DISTRICT.

It is hereby notified that the undermentioned Jodi village will be sold by public auction on account of arrears of revenue due to Government at Ardesahalli at 11 A.M., on the 3rd May 1906 :—

Aradesahalli, Jala hobli, Devanhalli Taluk, Bangalore District

For further particulars see page 516, Part II of the *Mysore Gazette* dated 5th April 1906.

D. DEVARAJ URS,
Dy. Comr.

KOLAR DISTRICT.

PROCEEDINGS OF THE MEETING OF THE KOLAR DISTRICT BOARD, HELD ON SATURDAY THE 17TH MARCH 1906.

PRESENT.

Ex-officio Members.

1. K. P. Puttanna Chetty, Esq., President.
2. C. Rama Rao, Esq., Assistant Commissioner, Chikballapur Division.
3. V. R. Tyagaraja Iyer, Esq., Assistant Commissioner, Chintamani Division.
4. Narasinga Rao Purniah, Esq., Assistant Commissioner, Malur Division.
5. C. Seshadri Iyengar, Esq., Treasury Assistant Commissioner and Vice-President.
6. K Krishna Iyengar, Esq., Executive Engineer.
7. N. R. Ponnasawmi Pillay, Esq., District Medical and Sanitary Officer, Kolar.
8. M. Rangachar, Esq., Deputy Inspector of Schools.

Non-official Members—Clause (d).

1. Mr. B. Muninarain Chetty of Kolar.
2. „ Rama Rao of Malur.
3. „ Chinnappa of Srinivaspur.
4. „ Donti Chikkasubrayappa of Sidlaghatta.
5. „ Chowdareddi of Chintamani.
6. „ Kasti Hyder Sab of Mulbagal.
7. „ Vommanniah of Bowringpet.
8. „ Narainswami Chetty of Chikballapur.
9. „ P. Venkatappa of Bagepalli.
10. „ Ramanna of Goribidnur.
11. „ Lakshman Rao of Gudibanda.

Clause (e).

12. „ Basave Gowda of Bowringpet.
13. „ K. Venkatasawmi Reddi of Srinivaspur.
14. „ K. Appaji Reddi of Chintamani.
15. „ Srinivasachar of Sidlaghatta.
16. „ Venkata Reddi of Bagepalli.
17. „ Gowdagere Krishnachar of Goribidnur.

1. Proceedings of the last meeting held on the 18th December 1905 were read and confirmed.

2. Read details of receipts and expenditure for July, August, September, October and November 1905, as audited by the Comptroller.

Recorded.

3. Read Government Proceedings No. 5881-92—L. B. (27-05)-6, dated 4th December 1905, directing that the estimates for the special repairs of Local Fund roads and other works should be placed before Boards for sanction previous to countersignature by the President.

Recorded.

4. Read Government Proceedings No. 7027-35—L. B. (275-05)-2, dated 6th January 1906, calling for the opinion of the Board in the matter of awarding three prizes of Rs. 7, 5 and 3, respectively, annually in each taluk to the patels of the villages which are kept very clean and tidy.

The Board fully approve of the idea and consider that it will materially advance the interests of sanitation of villages.

5. Read Government Proceedings No. 7864-71—L. B. (294-05)-2, dated 26th January 1906, calling for the opinion of the Board *re* the levy of notice fees in Village Unions.

Resolved by a majority that it is unnecessary at present to levy any notice fees in Village Unions, the collection being performed by the village servants.

6. Read Revenue and General Secretary's docket No. 8390—Med. 56-06-12, dated 12th February 1906, calling for a copy of the resolution of the Board whether the District Board are prepared to meet a moiety of the contribution payable from the Municipal Funds towards the cost of repairs of the Bagepalli Dispensary, the other moiety being met from Provincial Funds.

The Board are prepared to meet a moiety of cost of repairs as a special case by re-appropriation.

7. Read Government Proceedings No. 10180-1—L. R. 390-04-6, dated 27th January 1906, sanctioning the acquisition of the land recommended for the extension of the Shillangere villages and stating that the duty of providing village sites, etc., devolves upon the District Board in accordance with the existing rules.

Recorded.

8. Read Government Proceedings No. 8591-9—L. B. (340-05)-2, dated 19th February 1906, calling for the resolution of the Board *re* the cost of prizes to be awarded to the exhibitors of the best cattle at Nandi jatra, *viz.*, Rs. 100, being debitable to District Funds.

Resolved that the cost of prizes amounting to Rs. 100 be borne by the District Board.

9. Read Government Proceedings No. 9079-86—L. B. (115-05)-2, dated 5th March 1906, calling for the resolution of the Board whether the carts of the agriculturists passing through the toll gates are to be subjected to the payment of tolls and whether mail tongas carrying passengers in addition to mails are to be exempted from tolls.

The Board are unable to express an opinion as there are no tolls in this district.

10. Read Executive Engineer's No. 683, dated 21st December 1905, requesting to arrange to increase the mileage grant of Chintamani-Chelur road, from Rs. 60 to Rs. 100 and of Peresandra-Sadali road from Rs. 50 to Rs. 80.

The proposal was deferred for want of funds.

11. Read Executive Engineer's No. 23, dated 16th January 1906, and Chief Engineer's No. 657, dated 1st February 1906, requesting to arrange to enhance the mileage grant of Kolar-Sompur road from Rs. 80 to Rs. 120.

Deferred for want of funds.

12. Read District Fund Budget estimates of receipts and expenditure for 1906-07 as amended with the explanatory memo on the variation between the sanctioned amounts for 1905-06 and those proposed for 1906-07.

The amended estimates were approved.

13. Read memo by the President of the District Board on the proposed revision and strengthening of the District and Taluk Board Offices.

Resolved that the following proposals be accepted and submitted to Government for sanction :—

Existing Establishment				Proposed Establishment			
Designation	No.	Rate of pay per month		Designation	No.	Rate of pay per month	
Head clerk	1	30	1 35	Head clerk	1	40	5 50
Deputy clerk	1	25	1 30	Deputy clerk	1	30	½ 35
3rd clerk	1	20	1 25	3rd clerk	1	25	½ 30
4th clerk	1	15	1 20	4th clerk	1	20	½ 25
Record-keeper	1	10		5th clerk	1	15	½ 20
Peons at Rs. 6	2	12		Record-keeper	1	10	1 12
				Peons at Rs. 6	2	12	
Total District Board ...		132		Total District Board ...		184	
				One clerk for each of the Taluk Boards	11	12	1 15=165
				Grand Total ...		Rs. 349	

14. Read communications from the Presidents of the several District Boards *re* the mileage allowed to the Taluk Board members in their respective districts.

Resolved that the present practice be continued.

15. Read Kolar Division Assistant Commissioner's No. 1050, dated 1st February 1906, forwarding an estimate amounting to Rs. 759 for deepening a staired well in Shillangere village for sanction.

Deferred for want of funds.

16. Read Kolar Division Assistant Commissioner's No. 1177, dated 2nd March 1906, forwarding for sanction an estimate amounting to Rs. 299-15-8 for sinking a well at Waddahalli in Chintamani Taluk, out of the amount provided for a well at Dodda Karakamakalahalli in the current year's budget.

Resolved that the well at Waddahalli be taken in hand instead of one at Dodda Karakamakalahalli.

17. Read Malur Division Assistant Commissioner's Nos. 615, dated 3rd October 1905, and 886, dated 2nd December 1905, forwarding Bowringpet Amildar's reports requesting sanction for four lamps for each of the newly constituted Unions of Budikota and Bethamangala.

Resolved that lighting is not necessary for the Unions.

18. Read Malur Division Assistant Commissioner's No. 1063, dated 3rd January 1906, forwarding for orders a supplemental estimate amounting to Rs. 130 for sinking a well at Gonurkoppa of Malur Taluk which was originally sanctioned for Rs. 100 on 20th April 1903 and paid for on 30th June 1905.

Resolved that the estimate be sanctioned, the necessary funds being provided by reappropriation.

19. Read Malur Division Assistant Commissioner's No. 1110, dated 27th January 1906, forwarding for orders the application of the inhabitants of Budikota praying for the employment of a native doctor in that village, together with the resolution of the meeting of the Union Panchayet of Budikota.

Resolved that a native doctor is unnecessary a dispensary being situated at Bowringpet which is seven miles from Budikota.

20. Read Malur Division Assistant Commissioner's yadi No. 1185, dated 28th January 1906, forwarding for orders an estimate amounting to Rs. 170 for purchasing the required furniture to the 3rd class travellers' bungalow at Bethamangala.

Resolved that the estimate be sanctioned.

21. Read Chikballapur Division Assistant Commissioner's yadi No. 421, dated 9th October 1905, requesting to supply an Amrut Mahal bull to the Sidlaghatta Taluk.

Resolved that Amrut Mahal bulls be purchased from the grant made in current year's budget and supplied to taluks.

22. Read Chikballapur Division Assistant Commissioner's yadi No. 763, dated 17th December 1905, forwarding for orders the Kanarese correspondence *re* the acquisition of land for the new road to Peresandra village from the Bangalore-Bellary high road with his opinion that it would be better to pay a compensation of Rs. 10 for the hiduvalidars of the acquired lands and grant them the right to trees that stand thereon.

Resolved that a compensation of Rs. 10 be paid for the land and the right to trees continued to the present hiduvalidars.

23. Read Chikballapur Division Assistant Commissioner's yadi No. 1020, dated 17th February 1906, forwarding for sanction an estimate amounting to Rs. 1,100 for constructing a musafirkhana at Jangamkota, Sidlaghatta Taluk.

Resolved that provision for the work be made in the budget estimates for 1906-07, as the amount provided in the current year's budget has been reappropriated.

24. Read Mulbagal Amildar's No. 200, dated 26th January 1906, requesting to transfer the amount of Rs. 200, sanctioned for a well at Bissanahalli, to a well at Sringeri Chadamanahalli in the same taluk.

Approved.

25. Read Mulbagal Taluk Amildar's No. 236, dated 28th February 1906, requesting a transfer of funds provided for a well at Doddabandahalli to the improvement of musafirkhana at Mulbagal.

Approved.

26. Read and recorded the Proceedings of the following Taluk Boards:—

Kolar Taluk	Board, dated	26th	January 1906.
Bowringpet	do	20th	do
Srinivaspur	do	24th	February 1906.

Mulbagal Taluk Board,	dated	22nd	January 1906.
Sidlaghatta	do	23rd	do
Chikballapur	do	27th	do
Bagepalli	do	27th	do
Gudibanda	do	25th	do
Goribidnur	do	7th	February 1906.
Malur	do	22nd	do

27. Works costing Rs. 500 and less were sanctioned by the Board as follows:—

Taluk	Name of work	Amount of estimate Rs. a. p.
Bowringpet ...	Repairing cattle-pound at Kamasandra	50 0 0
Chintamani ...	Do kunte at Ambajidurga	150 0 0
	Sinking well at Kaivara	200 0 0
	Do Talagavara	300 0 0
Mulbagal ...	Do Seshapura	200 0 0
	Do Hosahalli	200 0 0
	Deepening well at Waddahalli	200 0 0
Chikballapur ...	Constructing tunnel near Doddamarali musafirkhana	400 0 0
Bagepalli ...	Repairing Nallacheruvu musafirkhana	200 0 0
	Do road leading to Pathapalya	50 0 0
	Total ...	1,950 0 0

28. Resolved that the next meeting be held on the 15th June 1906.

K. P. PUTTANNA CHETTY,
President.

MYSORE DISTRICT.

Notice dated 19th March 1906.

The attention of the public is invited to the detailed notice at page 481 of Part II of the *Mysore Gazette*, dated 29th March 1906, about the alienation of Sarvamanya Dadadahalli village, Krishnarajpete Taluk, by Pleader Mr. Athicuppa Ramaiya, in favor of the Sri Malleswaraswami temple at Krishnarajpete.

H. H. SPARKES,
Dy. Comr.

Memo dated 2nd April 1906.

Under Section 37 of the Code of Criminal Procedure Mr. C. Narayana Rao, B.A., B.L., acting Amildar and 3rd class Magistrate of T.-Narsipur Taluk, is invested with the following additional powers specified in Schedule IV of the said Code:—

(1) Power to make orders prohibiting repetitions of nuisance, Section 143.
(2) Power to make orders under Section 144.
(3) Power to hold inquests, Section 174.
(4) Power to take cognizance of offences upon complaint, Section 190.
(5) Power to take cognizance of offences upon Police Report, Section 190.

H. H. SPARKES,
District Magistrate.

Notification dated 5th April 1906.

It is hereby notified for general information that under the authority conveyed in Government Order No. 10016- 19—L. B. (169-05)-11, dated the 28th March 1906, the toll gate on the Nanjangud-Hasanur Ghat road in the Chamrajnagar Taluk, will be removed from its present position to the 1st furlong of the 131st mile on the same road, with effect from the 1st July 1906.

C. KRISHNA RAO,
for *President, District Board.*

HASSAN DISTRICT.

Notice, dated 28th February 1906.

It is hereby notified that the following documents are lying unclaimed for more than two years in the undermentioned Sub-Registry Offices of the Hassan District, and that they will be destroyed in accordance with Section 85 of the Registration Regulation, No. I of 1903, if not claimed by persons entitled to the same at the respective Sub-Registry Offices within one month from the date of this notice :—

Serial No	Name of Sub-Registry Office	Number of the book	Number of the instrument	Date of execution	Date of registration or refusal	Name of executant	Name of claimant	Nature and value of transaction
1	Hassan ...	I	269 / 1903-04	30th May 1903 ...	16th September 1903 ...	K. Narasimaiya, son of Subbavadhani, residing in Jodi Krishnapura, Hassan Taluk.	Venkatasubbaiya of Krishnapura, residing in Kamsika, Hassan Taluk.	Hypothecation deed for Rs. 100.
2	Do ...	I	524 / 1903-04	12th December 1903 ...	16th December 1903 ...	Dafadar Mariya Naik, son of Dafadar Sidda Naik, *alias* Thammaiya, residing in Hassan.	Cloth Merchant Sankappa, son of Devangada Sankaraiya, residing in Hassan.	Hypothecation deed for Rs. 60.
3	Manjarabad ...	I	96 / 1903-04	22nd October 1903 ...	23rd October 1903 ...	Lakshmegowda, son of Komarigowda, residing in Narur village, Manjarabad Taluk.	Ningegowda, son of Channegowda, residing in Narur village.	Sale deed for Rs. 100.
4	Do ...	I	135 / 1903-04	15th November 1903 ...	14th December 1903 ...	Manjaiya, *alias* Shamaiya, son of Manjaiya residing in Vuchangi village, Manjarabad Taluk.	Karekoppada Venkataramanaiya, son of Arkalgud Krishnappa, residing in Vuchangi.	Mortgage deed for Rs. 200.
5	Belur ...	I	*179 / 1902-03	16th February 1903 ...	18th February 1903 ...	Krishnappa, son of Kapanipataiya of Mattigatta.	Timmasetti, son of Venkatasetti of Huskur village, Belur Taluk.	Sale deed for Rs. 500.

* Mis. document was returned from the Sub-Judge's Court on 12th December 1905.

P. R. W. WETHERALL,
District Registrar.

Memo dated 23rd March 1906.

Under Rule III of the Government Notification No. 11289—Ex. F. 3-1901, dated 7th January 1902, the Deputy Commissioner, Hassan District, hereby delegates to the Excise Assistant Commissioner, Hassan District, the following powers vested in him, under the Excise Regulation of 1901 :—

(1) Power to permit import of liquor or intoxicating drug into Mysore under Section 6.

(2) Power to permit export of liquor or intoxicating drug from Mysore under Section 7.

(3) Power to grant licenses for the exclusive privileges of manufacture, etc., under Section 16.

(4) Power to cancel or suspend licenses or permits under Section 26.

P. R. W. WETHERALL, *Dy. Comr.*

CHITALDRUG DISTRICT.

OFFICIAL MEMORANDUM.

Dated 26th March 1906.

In pursuance of the instructions conveyed in Government Notification No. 11289—Ex. F. 3-1901, dated 7th January 1902, the undersigned hereby delegates the following powers to the Excise Assistant Commissioner of the Chitaldrug District, *viz* :—

(1) Power under Sections 6 and 7 of the Excise Regulation to grant permission for the import and export of liquor or intoxicating drug.

(2) Power under Section 16 to issue license for the privilege of manufacture or sale of liquor or intoxicating drug.

(3) Power under Section 26 to cancel or suspend license or permit granted under this Regulation.

(4) Power to fine up to Rs. 25 (twenty-five) licensees for breaches of license conditions.

H. RAMANUJAIENGAR,
Dy. Comr.

IN THE COURT OF THE PRINCIPAL MUNSIFF, BANGALORE.

Original Suit No. 558 *of* 1905-06.

Miscellaneous Case No. 595 *of* 1905-06.

Plaintiffs.	*Defendants.*
1. Subbayya.	1. Mooni Akkyamma.
2. Santhappa.	2. Rudrappa.
3. Sambanna.	

To all persons interested in the land described hereunder :—

Take notice that a petition has been filed in this Court by the plaintiffs named above for permission to sue Mooni Akkyyamma and Rudrappa, on behalf of all the persons interested in the land aforesaid, and that an order has been passed that the publication of this notice in the *Mysore Gazette,* shall be deemed to be good and sufficient service of the notice on all persons interested in the land.

The application will be heard on Tuesday, the 29th day of May 1906, at 11 A.M., on which day you are required to appear ; if you do not appear at the time above mentioned, such order will be made and proceedings taken as the Court may think just and expedient.

Dated this the 2nd day of April 1906.

ದಾವಾ ಷೆಡ್ಯೂಲ್.

ಬೆಂಗಳೂರು ಚಾಮರಾಜಪೇಟೇಲಿ ಪೂರ್ವಕ್ಕೆ-ಸರ್ಕಾರದ ರೋಡ್. ಪಶ್ಚಿಮಕ್ಕೆ-ಸರ್ಕಾರದ ಕಾಲ್ವೆ. ಉತ್ತರಕ್ಕೆ-ಸರ್ಕಾರದ ರೋಡ್. ದಕ್ಷಿಣಕ್ಕೆ-ವೈಸ್ ಪ್ರೆಸಿಡೆಂಟ್. ಶ್ರೀನಿವಾಸರಾಯರ ಬಂಗ್ಲೆ-ಈ ಮಧ್ಯೆ ಇರುವ 54ನೆ ನಂಬರು ತೋಟ್ಟಾ, ಇದರಲ್ಲಿರುವ ನಾನಾ ತರಹವಾದ ಮರ ಗಿಡ ಮತ್ತು ಮಠ ವಗೈರೆ.

T. E. JAYARAMA IYER,
Principal Munsiff.

IN THE COURT OF THE MUNSIFF OF SERINGAPATAM.

PRESENT: G. SATYAJI RAO, ESQ., B.A., B.L., MUNSIFF.

Miscellaneous Case No. 648 *of* 1905-06.

In the matter of the estate of Nanjundappa, resident of Seringapatam. *Deceased.*

Subbiah, minor, by guardian step-mother Akkammanni ... ... *Applicant.*

Whereas Subbiah, represented by his step-mother Akkammanni, claiming to be the son of Nanjundappa, deceased, has applied to this Court for a certificate under Regulation, VII of 1901, to collect debts to the extent of Rs. 585, payable in respect of the estate of Nanjundappa, deceased, resident of Seringapatam.

Notice is hereby given of the said application; and all claimants in the estate of the said Nanjundappa, deceased, are invited to appear in this Court on Wednesday the 13th day of June 1906, when the petition of the said Subbiah, the applicant, will be heard, and the right to the certificate will be determined.

Given under my hand and the seal of the Court this 2nd day of April 1906.

G. SATYAJI RAO,
Munsiff.

IN THE COURT OF THE MUNSIFF OF CHITALDRUG.

Insolvency Mis. No. 428 *of* 1905-06.

In the matter of the application of Shanbhog Bheemasena Rao, son of Sivappa *alias* Krishna Rao, resident of Ganganarsi, Harihar Sub-Taluk, praying to be declared an insolvent.

The above application coming on for hearing before S. Krishna Rao, Esq., in the presence of Mr. M. B. Krishna Rao, Pleader for the petitioner, the counter-petitioners being absent *ex parte*, it is hereby ordered that the said Shanbhog Bheemasena Rao be declared an insolvent and that S. Somasundra Rao, the record-keeper of this Court, be appointed a receiver of the insolvent's property.

No.	Name of creditor	Amount Rs.	a.	p.	When contracted
1	Nattagi and Narasajee ...	31	3	1	Due under a decree in S. C. No. 878 of 1904-05 on the file of this Court.
2	Mahadevappa ...	90	0	0	Due on a bond and on accounts.
3	Ramanna, minor, by his guardian Sesha Dikshita.	260	0	0	Due under a decree of the late Honnali Munsiff's Court.
4	Mahadeva Naika ..	75	0	0	Due on a pro-note.
5	M. Venkamma ...	250	0	0	Due under a decree of the late Honnali Munsiff's Court.

Given under my hand and the seal of the Court this the 16th day of March 1906.

S. KRISHNA RAO, *Munsiff.*

BANGALORE DIVISION.

Dated 4th April 1906.

Notice is hereby given that sealed tenders will be received at the office of the Executive Engineer, Bangalore Division, up to 17th April 1906, for constructing quarters for the staff of Government Distillery at Bangalore. An approximate estimate of quantities is given below. These quantities are not guaranteed. The work should be completed by the end of June 1907.

2. The plans, detailed estimate and conditions may be seen at the Executive Engineer's office at Bangalore between the hours of 11 A. M. to 5 P. M.

3. Tenders should be submitted on printed forms which may be obtained from the Executive Engineer. The tenders should be accompanied by a statement in the form given below, showing the rates at which the different items specified will be executed.

4. Each tender must be accompanied by a deposit of Rs. 200 in cash or Government Promissory Notes, as earnest money, and be superscribed "Tender for constructing quarters for the staff of Government Distillery" in default of which, tenders will be rejected.

5. The final acceptance of any tender will rest with the Chief Engineer, who does not bind himself to accept the lowest or any tender or to assign any reason whatever for the rejection of any tender.

6. Within eight days of the acceptance of the tender, the successful competitor will be required to execute the usual contract band; in default of which, his tender will be considered cancelled, and his earnest money will be forfeited.

7. The name of the successful competitor, whose tender has been accepted, will be posted on the notice board in the Executive Engineer's office in due course. No enquiries regarding the acceptance or rejection of a tender will receive any reply.

8. On acceptance of one of the tenders, the earnest money on rejected tenders will be returned.

Estimate for constructing quarters for the staff of Government Distillery at Bangalore.

Items of work	Per	Block of 2 huts for an Acctt. and Asst. Inspector	Block of 4 huts for 2 Sub-Inspectors and 2 Naiks	Block of 14 huts for 13 guards and 1 sweeper	Approaches and tunnels	Total
Earthwork excavation	C. yds.	67	89	247	...	403
Concrete filling	C. ft.	165	194	625	...	984
Stone in chunam foundation and basement ...	,,	2,496	3,383	9,371	...	15,250
Burnt brick in clay	,,	3,398	3,577	13,274	..	20,249
Burnt brick in chunam	,,	675	689	1,944	...	3,308
Burnt stone slabs	S. ft.	394	608	1,950	...	2,952
Plastering with chunam	Sqrs.	82·05	109·58	185·82	...	377·45
Plastering with mud	,,	...	...	145·09	...	145·09
White and color washing	,,	82·05	109·58	330·91	...	522·54
Flooring with Kadapa slab on 3" sand ...	,,	7·60	10·65	22·00	..	40·25
Do gravel	C. yds.	19	21	104	...	144
Honne wood including oiling and tarring ...	C. ft.	105·77	137·63	343·12	...	586·52
Roofing with Mangalore tiles and teak reepers ...	Sqr.	20·99	27·93	74·96	...	123·88
Ridging	R. ft.	80	122	416	...	618
Ventilating tiles	Each	36	48	120	...	204
Sky lights	,,	24	24	28	...	76
Eave boards, ornamental and plain	R. ft.	168	191	Plain 401	...	359 401
Teakwood fenials	Each	2	2	2	...	6
Do terminals	,,	4	4	4	...	12
Do door with battened shutters, etc. ...	S. ft.	261	521	1,505	...	2,287
Do windows with iron bars	,,	90	132	462	...	684
Do Cupboards	,,	16	32	112	...	160
Painting	Sqrs.	9·53	15·92	45·40	...	70·85
Improvements to latrines squething and shoot stones.	Each	2	4	14	...	20
Zink buckets	,,	2	4	14	...	20
Clearing and levelling site	,,	2	4	14	...	20
Coping including plastering	R. ft.	145	222	810	...	1,177
U and V drains with concrete bed	,,	300	400	600	...	1,300
Pointing with chunam	Sqr.	2·77	3·08	13·36	...	19·21
Forming approach road and tunnels	Lump sum	...	...	Lump sum	...	...

B. VENKATACHAR, *Executive Engineer.*

MYSORE DIVISION.

Dated 31st March 1906.

The attention of the public is invited to the notification published on page 483 of the *Mysore Gazette*, Part II, dated 29th March 1906, regarding the tenders required for the restoration of Halebide tank, Registered No. 821, Hunsur Taluk.

V. V. KARVE, for *Executive Engineer.*

Notice dated 5th April 1906.

The undersigned hereby gives notice that a month after date, he intends moving the Hon'ble Chief Court to enrol him as an Advocate thereof.

SHIKARIPUR SUBRAMANYA, B.A., *First Grade Pleader.*

BANGALORE CITY MUNICIPALITY.

Notice dated 9th April 1906.

The following business will be transacted at an ordinary meeting of the Municipal Commissioners for the City of Bangalore, to be held at their office premises at 7-30 A.M., on Thursday the 19th April 1906 :—

Deferred Proposition.

Sub-Committee's report suggesting revision of establishment under several branches of the City Municipal service with a proposition statement embodying their proposals in order to introduce reform in the working of the Municipality, called for in para 13 of Government Order on the report of the Municipal Financial Committee.

Ordinary Propositions.

1. Cash Account Current, Demand, Collection and Balance Statements, Mortuary return, Progress report of works, Memo of visitors to the Srinivasa Mandiram Library, City Municipal English and Kannada Schools returns, Maternity return, Langarkhana return, Statement of materials and Statement of rewards for the destruction of dogs, and return of prosecutions for March 1906.

2. Remission Statement for arrears of Municipal taxes amounting to Rs. 143-4-0, irrecoverable on account of death, desertion or poverty of the parties concerned.

3. General and Revenue Secretary's docket No. 9799—Ml. (204-05)-2, dated the 22nd March 1906, regarding the transfer of the two dispensaries in the New Extensions to the Municipality.

4. Consideration of the question of granting proportionate half remission of taxes amounting to Rs. 856-8-6 on the Mysore Spinning, Weaving and Manufacturing Company, Ld., for a period of two years and ten months and nine days, when the Mills had stopped work.

5. Proposal to revise schedule of articles liable to Octroi duty with a view to increase Municipal revenue as recommended by the Finance Committee in their report to Government No. 253, dated the 19th December 1904.

6. Consideration of the question of receiving Octroi duty on the net value of piece-goods after deducting discount from the gross total amount mentioned on the Invoices.

Notice, dated the 9th April 1906.

In supersession of this office Notice dated the 17th March 1906, published in '*Mysore Gazette*' dated the 22nd idem, the following revised table showing dates of election is published for the information of the public :—

Name of Division	Name of place	Date fixed	No. to be elected
I Palace Division ..	High Ground Police Station ...	1906 May 15th Tuesday ...	1
II Balepet do ..	Balepet Police Station ...	,, 17th Thursday ...	2
III Manavartepet Division ..	Government Girls' School, Chikpet ...	,, 19th Saturday ...	2
IV Ulsurpet do ...	Yelahanka Police Station	,, 21st Monday ...	2
V Nagarthpet do ...	Ulsur Gate do ..	,, 23rd Wednesday ...	1
VI Lal-Bagh do ...	Kalasipalya do ...	,, 25th Friday ...	1
VII Fort and Chamrajpet Division .	Old Palace	,, 28th Monday ...	1
VIII Basavangudi Division ...	Police Station	,, 30th Wednesday ...	1
IX Malleswaram do ...	Do	,, 31st Thursday ...	1

Supplemental list of persons residing in No. I Palace Division, qualified for election as Municipal Commissioners for the City of Bangalore, 1905-06.

No.	Name	Door No.	Residence
1	M. R. Ry. Chikkannaiyanavara Marappa ...	108	Munireddipalya
2	,, Kotamunisawmi Chetty ...	16—17	Avenue road

Supplemental list of persons residing in No. II Balepet Division, qualified for election as Municipal Commissioners for the City of Bangalore, 1905-06.

No.	Name	Door No.	Residence
1	M. R. Ry. Mandi Revanna	1	Srikanta Rukamaji's lane
2	,, Dod Gangayya ...	5	Kottigay lane
3	Mahomed Yusuff Saib ...	48—1	Subedar Chattram road
4	Abdul Rahiman Saib ...	60	Do

Supplemental list of persons residing in No. II Balepet Division, qualified to vote for the election of Municipal Commissioners for the City of Bangalore, 1905-06.

No.	Name	Door No.	Residence
1	M. R. Ry. Pala Sing ...	13	Mukdaashetti Ramanna's lane
2	,, Bullappa ...	15	Armugam Mudaliar's lane
3	,, Varadaraj Naidu ..	373	Taluk Cutcherry road
4	,, Venkataswamappa ...	48—6	Subedar Chattram road
5	,, Chik Subbaiya ...	68	Huriyopete
6	,, Thataiya Naidu ...	363	Taluk Cutcherry road
7	,, Rangappa ...	18	Subedar Chattram road
8	,, Padmanabhaiya ...	40	Dewankhana lane
9	,, A. Subba Rao ...	86	Srinivasa Mandiram road
10	,, Venkatramaiya ...	3	Purnaiya Chattram road

Supplemental list of persons residing in No. III Manavartepete Division, qualified for election as Municipal Commissioners for the City of Bangalore, 1905-06.

No.	Name	Door No.	Residence
1	M. R. Ry. Dibbur Rudrappa ...	8	Dewan Surappa's lane
2	,, Muddappa ...	34	Belli Basavangudi galli
3	,, B. S. Ramaiya ...	30	Kasi Visvesvaragudi lane
4	,, Channa Chetti ...	482	Taluk Cutcherry road
5	,, Naganna ..	22	Akkipet
6	,, A. Basappa ...	183	Arlepet
7	,, Revanna ...	15	Totadyavara galli

Supplemental list of persons residing in No. III Manavartepete Division, qualified to vote for the election of Municipal Commissioners for the City of Bangalore, 1905-06.

No.	Name	Door No.	Residence
1	M. R. Ry. B. Srinivas Iyengar, B. A. ...	104	Sultanpet
2	,, Putta Shamachar ...	76	Belli Basavangudi lane
3	,, Mudda ...	34	Do
4	Bahudin Saib ...	406—1	Taluk Cutherry road
5	M. R. Ry. Dibbur Rudrappa ...	8	Dewan Surappa's lane
6	,, B. S. Ramaiya ...	30	Kasi Visvesvaragudi lane
7	,, Channa Chetti ...	482	Taluk Cutcherry road
8	,, Naganna ...	22	Akkipet
9	,, A. Basappa ...	183	Arlepet
10	,, Gurusiddappa ...	120	Do
11	Abdul Latiff Saib ...	18	Birdevargudi lane
12	M. R. Ry. Kyvar Venkata Rao, B. A. ..	13	Setu Rao's street
13	,, B. Garudachar, B.A., B.L. ...	155	Taragupet
14	,, Aruvanna ...	37	Muni Ramanna's street
15	,, Sibanna ...	7	Narasimha Maistri's street
16	,, Gurupadappa ..	13	Gejje Basetti's street
17	,, Revanna ...	15	Totadyavar galli

Supplemental list of persons residing in No. IV Alsurpet Division, qualified for election as Muni ipal Commissioners for the City of Bangalore, 1905-06.

No.	Name	Door No.	Residence
1	M. R. Ry. K. N. Veerabhadriah ...	85	Cubbon road
2	„ Mahadimane Chikanna ..	3	Cubbon road, 8th lane
3	„ Ammi Venkatramanappa ...	6	Do
4	„ Naganna ..	46	Ganigar street
5	Adam Saib ...	14	Ganigar A street
6	M. R. Ry. Bhadrappa .	18	Andanappa's lane

Supplemental list of persons residing in No. IV Alsurpet Division, qualified to vote for the election of Municipal Commissioners for the City of Bangalore, 1905-06.

No.	Name	Door No.	Residence
1	M. R. Ry. Mahadimane Chikanna ...	3	Cubbon road, 8th lane
2	„ Narashimmaiya ..	46	Cubbon road, 3rd lane
3	„ Naganna ...	46	Ganigar street
4	„ Surya Narayana Sastri ...	31—2-32	Ganigar A street
5	„ Murdappa Setty ...	14	Chowdeswari temple street
6	„ Bhadrappa ...	18	Andanappa's lane .

Supplemental list of persons residing in No. V Nagarthapet Division, qualified to vote for the election of Municipal Commissioners for the City of Bangalore, 1905-06.

No.	Name	Door No.	Residence
1	M. R. Ry. Hutchappa ...	5	Gollar P. Ganganna's galli
2	„ Thimmaiya ...	1	Kencha Naik's lane
3	„ Dyavanna ...	19	Do
4	„ Kempaiya ...	54	Kumbarpet
5	„ Sreerangappa ..	56	Do
6	„ K. Venkataramaiya ...	35	Hospital Santhappa's street

Supplemental list of persons residing in No. VI Lal-Bagh Division, qualified for election as Municipal Commissioners for the City of Bangalore, 1905-06.

No.	Name	Door No.	Residence
1	M. R. Ry. M. Subbaiya, B.A. ...	18	Lal-Bagh high road

Supplemental list of persons residing in No. VII Fort Division, qualified for election as Municipal Commissioners for the City of Bangalore, 1905-06.

No.	Name	Door No.	Residence
1	M. R. Ry. Veerabhadrappa	11	3rd main road.
2	„ Subba Rao	160	Do
3	„ Venkatarama Sastri	12	4th main road.
4	„ Sreenivasa Iyengar	38	Do
5	„ Bala Krishna Naidu	3	5th main road.
6	„ Mannarappa	24	Do
7	„ Baily Sheshagiri Rao.. ...	26	Do

Supplemental list of persons residing in No. VII Fort Division, qualified to vote for the election of Municipal Commissioners for the City of Bangalore, 1905-06.

No.	Name	Door No.	Residence
1	M. R. Ry. Veerabhadrappa	11	3rd main road.
2	„ Subba Rao	160	Do
3	„ Venkatarama Sastri	12	4th main road.
4	„ Lakshmana Rao	17	Do
5	„ Naranappa	26	Do
6	„ Narasinga Rao	162	Do
7	„ Shama Rao	164	Do
8	„ Sreenivasa Iyer	38	Do
9	„ Balakrishna Naidu	3	5th main road.
10	„ Mannarappa	24	Do
11	„ Baily Sheshagiri Rao	26	Do

Supplemental list of persons residing in No. VIII Basavangudi Division, qualified to vote for the election of Municipal Commissioners for the City of Bangalore, 1905-06.

No.	Name	Door No.	Residence
1	M. R. Ry. J. Venkata Rao	16	5th cross road.

Supplemental list of persons residing in No. IX Malleswaram Division, qualified to vote for the election of Municipal Commissioners for the City of Bangalore, 1905-06.

No.	Name	Door No.	Residence
1	M. R. Ry. Guruswami Iyer	28	4th main road.

A. S. NAGAVKAR,
President.

MYSORE CITY MUNICIPALITY.

Notification dated 5th April 1906.

The right to collect tolls in the City of Mysore (subject to the provisions contained in Sections 49 and 51 of the Municipal Regulations) at each toll-gate or at all the toll-gates specified in Schedule A, from the 1st July 1906 to the 30th June 1907, will be sold by public auction in the Rangacharlu Memorial Hall by the President or any other officer deputed for the purpose, at 1 o'clock on the afternoon of the 19th May 1906.

2. The contractors who purchase the right must collect tolls at the rates mentioned in Schedule B on in-coming traffic only and at no higher rates, and shall be bound to furnish receipts in the form prescribed by the President, duly dated, to the parties paying tolls.

3. The President reserves to himself the power of refusing or accepting the highest or any bid that may be offered.

4. The contract amount is payable in twelve equal monthly instalments due on or before the 10th of the following months. The contractors shall pay, as soon as the sale is over, a deposit equal to two monthly instalments for the due performance of the contract. The amount in deposit will, if the conditions of the contract are complied with, be credited towards the instalments due for the last two months of the contract.

5. If the deposit is not made immediately after the close of the sale, the contract will be resold at the risk of the approved bidder. If default is made in the payment of instalments, the contractors will forfeit the deposit and the unexpired portion of the contract will also be liable to be sold and the deficit will be recovered from the contractors, who shall not be entitled to the profit, if any.

6. The contractors are also bound to keep an account showing the daily collections, etc., in the form specified by the President, and it shall be submitted by the contractors every month for the inspection of the President and shall also be open to inspection by the Sayer and Municipal authorities.

7. They shall also be bound to keep true account of traffic passing through the gates as specified in para 6, for which purpose they shall bind themselves to maintain at their own cost a resident mutsaddi at each toll-gate.

8. The contractors will have the use of existing toll-houses and gates, and they will be required to keep them in good order.

9. No tolls will be levied on the following :—

(1) Vehicles bearing Municipal numbers or possessing passes of the City Municipality and on carriages or carts, and animals, the property of, or employed by, Government or the Municipal Commission or licensed or registered by the said Commission; and no more than one payment of toll shall be demanded for, and in respect of, any carriage or cart or animal, in any one period of twenty-four hours counted from midnight to midnight.

(2) All vehicles and animals used for the passage of troops and Military or Government Stores and equipages on their march, or of Military, Civil or Police officers on duty, or of any person or property in their custody, and vehicles and animals belonging to the Palace Department.

SCHEDULE A.

1. Railway feeder road	...	Ookad at the end of Balagula road where it joins the road to the Sick Lines.
2. Balagula road ...	...	Kempinakatte Ookad.
3. Seringapatam road	...	Yarekatte do
4. Bangalore road ...	...	Viranagere do
5. Cemetery road ...	...	Bungli Santri do
6. Mahadevapur road	...	Jalapuri do
7. Alanahalli road	...	Ittigegud do
8. Race-course road	...	Ronasantri do
9. Nanjangud road	...	Nanjangud do
10. Do	...	Nachanahalli do as now defined on the spot.
11. Manantoddy road	..	Chettanahalli Ookad.
12. Viceroy road	...	Holageri do
13. Road behind Chamraj Agrahar		Do do
14. Jubilee road	...	Kukkarahalli do
15. Yelwal road	...	Srirampet do

SCHEDULE B.

Tolls payable on entering Municipal limits.

		Rs.	a.	p.
1. On every four-wheeled carriage on springs		0	4	0
2. Do two-wheeled do		0	2	0
3. Do hackney or cart drawn by men, bulls, bullocks, horses, mules, laden		0	2	0
4. Do do not laden		0	1	0
5. Do buffalo, bull or bullock, laden		0	0	6
6. Do horse over thirteen hands, laden or ridden ..		0	1	0
7. Do do do not laden or ridden ..		0	0	6
8. Do horse of or under thirteen hands, laden or ridden ..		0	0	6
9. Do elephant		0	8	0
10. Do camel		0	1	0

C. VENKATA RAO,
for *President.*

GOVERNMENT CENTRAL BOOK DEPOT.

Notification dated 14th March 1906.

Copies of the Mysore Chief Court Law Reports, Vol. VI (January to December 1901) and Vol. VIII (January to December 1903), are available for sale at the Central Book Depot, Bangalore. The price of each volume is Rs. 5 only, exclusive of postage.

S. ABDUL HAI,
Curator, Govt. Central Book Depôt, Bangalore.

Notice dated 14th March 1906.

The undersigned hereby gives notice that a month after date, he intends moving the Honorable Chief Court to enrol him as an Advocate thereof.

S. VENKATESAIYA, B.A., B.L.

MYSORE CITY TELEGRAPH OFFICE.

List of undelivered Messages for the month of April 12th 1906.

Station			Address
Udamalpet	...	...	Dupansetty Paiyateruvu Varpuvalai.
Vellore Fort (Arcot)	...	...	Amulut Tharachand.

MYSORE GOVERNMENT METEOROLOGICAL DEPARTMENT.

Daily Means of Observations for the Week Sunday 25th to Saturday 31st March 1906.

No.	BANGALORE	Sunday 25	Monday 26	Tuesday 27	Wednesday 28	Thursday 29	Friday 30	Saturday 31
1	Barometer red. to 32° F.	26·957	26·968	26·926	26·916	26·927	26·932	26·916
2	Daily Barometric range	·106	·136	·118	·138	·119	·125	·137
3	Mean Dry Temperature in shade	77·0	77·1	77·7	80·0	78·6	78·8	79·8
4	Maximum do	91·9	95·5	94·8	94·0	94·3	93·8	93·1
5	Minimum do	63·1	59·6	61·2	67·6	64·1	66·0	67·1
6	Daily range of do	28·8	35·9	33·6	26·4	30·2	27·8	26·0
7	Mean Wet Temperature in shade	61·6	59·2	61·8	63·7	62·9	63·6	64·8
8	Minimum do	60·2	57·2	58·2	60·0	59·8	60·8	59·1
9	Pressure of Aqueous Vapour	·334	·262	·367	·433	·393	·421	·492
10	Humidity	33	27	36	40	36	40	46
11	Wind Vely. in Miles p. day to 8 A. M	178	174	191	162	200	179	139
12	Mean Wind Direction	E S E	E S E	S E	S E b E	S E	S b W	S S W
13	Rainfall in inches to 8 A. M.	0	0	0	0	0	0	0
14	Total Rainfall from 1st January	1·64	1·64	1·64	1·64	1·64	1·64	1·64
15	Per cent of Cloudy Sky	0	0	7	50	73	77	73
16	Character of Weather	Hazy	Fine clear	Dust haze	Fine	Fine	Fine	Fine

MYSORE GOVERNMENT METEOROLOGICAL DEPARTMENT.

Daily Means of Observations for the Week Sunday 25th to Saturday 31st March 1906.

No.	MYSORE	Sunday 25	Monday 26	Tuesday 27	Wednesday 28	Thursday 29	Friday 30	Saturday 31
1	Barometer red. to 32° F.	27·427	27·438	27·402	27·381	27·396	27·400	27·396
2	Daily Barometric range	·136	·163	·172	·157	·150	·146	·141
3	Mean Dry Temperature in shade	82·0	82·0	82·0	84·2	83·7	82·2	80·9
4	Maximum do	94·9	96·7	96·9	96·6	96·9	95·1	91·5
5	Minimum do	69·4	67·9	67·7	72·6	71·2	69·9	68·0
6	Daily range of do	25·5	28·8	29·2	24·0	25·7	25·2	26·5
7	Mean Wet Temperature in shade	67·0	64·5	64·8	67·4	67·3	67·4	67·4
8	Minimum do	65·3	59·7	61·3	61·0	64·4	63·6	63·0
9	Pressure of Aqueous Vapour	·483	·442	·481	·564	·508	·524	·513
10	Humidity	44	39	49	47	45	48	44
11	Wind Vely. in Miles p. day to 8 A.M.	140	177	222	142	193	163	145
12	Mean Wind Direction	S E b S	S E b E	S S E	S E b E	S E	S S E	S E b S
13	Rainfall in inches to 8 A.M.	0	0	0	0	0	0	0
14	Total Rainfall from 1st January	0·75	0·75	0·75	0·75	0·75	0·75	0·75
15	Per cent of Cloudy Sky	0	30	100	100	97	100	93
16	Character of Weather	Fine clear	Fine passing clouds	Foggy ; fine	Cloudy	Cloudy	Cloudy	Cloudy

MYSORE GOVERNMENT METEOROLOGICAL DEPARTMENT.

Daily Means of Observations for the Week Sunday 25th to Saturday 31st March 1906.

No.	HASSAN	Sunday 25	Monday 26	Tuesday 27	Wednesday 28	Thursday 29	Friday 30	Saturday 31
1	Barometer red. to 32° F.	26·890	26·899	26·855	26·844	26·858	26·871	26·847
2	Daily Barometric range	·116	·142	·155	·146	·136	·123	·133
3	Mean Dry Temperature in shade	78·5	78·9	78·4	79·1	79·7	77·6	79·3
4	Maximum do	94·4	97·4	96.8	95·8	96·0	93·4	95·8
5	Minimum do	63·0	61·6	60·9	65·3	64·3	63·3	64·0
6	Daily range of do	31·4	35·8	35·9	32·5	31·7	30·1	31·8
7	Mean Wet Temperature in shade	63·5	61·5	61·1	65·4	66·3	65·8	64·2
8	Minimum do	57·9	54·6	52·9	60·4	63·1	62·1	62·1
9	Pressure of Aqueous Vapour	·352	·358	·377	·479	·496	·489	·401
10	Humidity	28	33	34	43	46	47	36
11	Wind Vely. in Miles p. day to 8 A.M.	47	47	45	50	46	49	48
12	Mean Wind Direction	N N E	S S E	S b E	S E b S	N E	E N E	E b N
13	Rainfall in inches to 8 A.M.	0	0	0	0	0	0	0
14	Total Rainfall from 1st January	0·03	0·03	0·03	0·03	0·03	0·03	0·03
15	Per cent of Cloudy Sky	0	10	33	80	90	90	53
16	Character of Weather	Fine clear; sultry	Dust haze	Dust haze	Dust haze	Cloudy sultry	Cloudy sultry	Cloudy sultry

MYSORE GOVERNMENT METEOROLOGICAL DEPARTMENT.

Daily Means of Observations for the Week Sunday 25th to Saturday 31st March 1906.

No.	CHITALDRUG	Sunday 25	Monday 26	Tuesday 27	Wednesday 28	Thursday 29	Friday 30	Saturday 31
1	Barometer red. to 32° F.	27·532	27·539	27·483	27·468	27·484	27·482	27·475
2	Daily Barometric range	·118	·155	·153	·157	·133	·138	·141
3	Mean Dry Temperature in shade	84·6	85·5	85·3	84·9	85·5	85·1	86·0
4	Maximum do	97·2	99·2	100·2	99·9	99·0	98·0	98·0
5	Minimum do	73·1	72·5	71·4	70·1	72·6	73·2	74·6
6	Daily range of do	24·1	26·7	28·8	29·8	26·4	24·8	23·4
7	Mean Wet Temperature in shade	66·9	62·2	63·2	69·3	70·0	71·9	67·9
8	Minimum do	64·3	57·9	57·3	62·9	62·9	68·2	59·3
9	Pressure of Aqueous Vapour	·422	·285	·334	·564	·606	·585	·499
10	Humidity	33	23	25	42	44	42	35
11	Wind Vely. in Miles p. day to 8 A. M	92	149	136	68	95	111	132
12	Mean Wind Direction	N b E	N E b E	N W b W	N W b N	S b E	S W b W	N N W
13	Rainfall in inches to 8 A. M.	0	0	0	0	0	0	0
14	Total Rainfall from 1st January	1·24	1·24	1·24	1·24	1·24	1·24	1·24
15	Per cent of Cloudy Sky	0	10	0	13	80	77	23
16	Character of Weather	Fine clear	Fine clear; sultry	Fine clear; sultry	Fine; sultry	Dust haze	Fine; sultry	Fine; sultry

Dated 5th April 1906.

J. Cook, *Director of Meteorology.*

Abstract Statement of Plague Cases and Deaths in the Mysore Province for the week ending Friday the 6th April 1906.

Place	During the week ending 6th April 1906		During the week ending 30th March 1906		Figures for the corresponding week of last year		Number of infected villages
	Attacks	Deaths	Attacks	Deaths	Attacks	Deaths	
Bangalore City	12	7	9	7	19	17	...
Mysore City	...	...	...	...	2	1	...
Bangalore District	1	3	1	1	18	11	2
Mysore District	...	1	...	...	5	5	1
Kolar District (excluding Gold Fields)	1	1	2	...	9	9	1
Kolar Gold Fields	6	2	5	6	1	1	4
Tumkur District	1	1	...	...	3	3	1
Hassan District	...	...	...	...	...	...	...
Chitaldrug District	1	1	2	3	...	...	1
Kadur District	...	...	1	1	4	3	2
Shimoga District	4	1	7	6	8	5	5
Total ...	26	17	27	24	69	55	17

T. S. NANJAPPA,
for *Offg. Sr. Surgn. & Sany. Comr., M. G.*

170

The Mysore Gazette.

Vol. 41.] PUBLISHED BY AUTHORITY. [No. 15.

BANGALORE, THURSDAY, APRIL 12, 1906.

PART III.

Legislative Measures and Rules thereunder.

REGULATION No. I OF 1906.

(PASSED ON THE 16TH DAY OF MARCH 1906.)

A REGULATION TO MAKE PROVISION FOR COMPULSORY VACCINATION IN MYSORE.

Preamble.

Whereas it is expedient to make provision for compulsory vaccination in Mysore; His Highness the Maharaja is pleased to enact as follows:—

Short title.

1. (1) This Regulation may be called "The Mysore Vaccination Regulation, 1906."

Extent.

(2) And it extends to the whole of Mysore.

Government may declare vaccination compulsory in any local area.

2. (1) The Government may, by notification in the official Gazette, declare that vaccination shall be compulsory in any local area from and after a date and during a period to be fixed in such notification, and under such rules as may from time to time be made by Government, or under such by-laws as may, with the approval of Government, be made from time to time by a local authority empowered by Government in this behalf.

(2) The Government may, in like manner, cancel or modify any such declaration.

Penalty.

(3) For every breach of a rule or by-law under Sub-Section (1) the offender shall be liable to a fine not exceeding fifty rupees.

Provided that no penalty shall be imposed on any person by reason of non-vaccination if he has already had small-pox.

P. N. KRISHNA MURTI,
Dewan of Mysore.

171

The Mysore Gazette.

VOL. 41.] PUBLISHED BY AUTHORITY. [No. 15.

BANGALORE, THURSDAY, APRIL 12, 1906.

PART IV.

OFFICIAL PAPERS.

Season Report for the Week ending with the 14th Saturday in 1906 (*7th April* 1906).

District and Station.	Rainfall up to 8 A.M. on Saturday. This week		Last ten years' average for the corresponding week.		Up to the end of the week from 1st January 1906. This year.		Average of past ten years.		Excess (+) or defect (—) of column 4 compared with column 5.		Price of food grains in seers per rupee, and market fluctuations in prices of food grains.			
1	2		3		4		5		6		7			
	I.	c	I.	c.	I.	c.	I.	c.	I.	c.		This week.	Past week.	Past ten years' fortnightly average.
												Seers	Seers	Seers.
BANGALORE. Bangalore C. & M. Station ...	...	...	...	...	...	..	...	...	..	...				
" City & Taluk...	...	...	...	33	1	83	1	17	+ 0	66	Rice, 2nd sort.	7·50	7·25	9·21
Hoskote ...	...	..	...	4	..	50	..	75	— 0	25				
Dodballapur ...	...	...	...	15	...	43	...	96	— 0	53	Ragi	18·50	17·00	22·90
Nelamangala ...	...	...	...	31	..	73	...	78	— 0	5	Kulthi	12·25	12·00	...
Kankanhalli ...	...	...	...	42	...	63	...	96	— 0	33	Kadale	8·00	9·00	10·05
Magadi ...	..	..	..	5	..	...	...	57	— 0	57				
Channapatna ...	...	..	...	32	..	14	1	6	— 0	92				
Anekal ...	...	...	...	37	2	7	1	6	+ 1	1				
Devanhalli ...	...	...	...	...	...	52	...	63	— 0	11				
Closepet ...	..	15	...	25	...	15	...	52	— 0	37				
District average...	...	2	...	22	..	70	..	85	— 0	15				
KOLAR. Kolar ...	...	...	...	2	...	52	...	71	— 0	19				
Bowringpet ...	...	...	..	5	...	9	...	78	— 0	69	Rice, 2nd sort.	7·25	7·50	9·20
Chintamani ...	...	...	...	3	1	..	...	70	+ 0	30				
Mulbagal ...	...	27	...	...	1	60	1	28	+ 0	32	Ragi	15·00	15·00	23·60
Sidlaghatta ...	...	...	...	12	...	36	...	78	— 0	42	Kulthi	15·00	14·00	...
Chikballapur ...	...	29	...	21	2	44	1	37	+ 1	7	Kadale	9·00	9·00	9·40
Bagepalli ...	...	...	...	3	1	20		35	+ 0	85				
Goribidnur ...	...	...	...	10	...	60	...	46	+ 0	14				
Malur ...	..	...	..	13	...	95	...	55	+ 0	40				
Srinivaspur ...	...	...	...	16	1	9	..	94	+ 0	15				
Gudibanda ...	...	...	...	8	...	73	...	64	+ 0	9				
District average...	...	5	..	8	..	96	...	78	+ 0	18				
TUMKUR. Tumkur ...	..	4	..	11	1	20	...	95	+ 0	25				
Maddagiri ...	...	...	...	11	...	28	..	46	— 0	18				
Chiknayakanhalli ...	...	...	...	16	1	40	...	66	+ 0	74	Rice, 2nd sort.	7·50	7·50	9·35
Sira ...	...	...	...	10	1	37	...	40	+ 0	97				
Gubbi ...	.	...	...	4	..	36	...	49	— 0	13	Ragi	16·00	16·00	26·10
Tiptur ...	...	...	...	13	...	20	.	32	— 0	12	Kulthi	12·00	12·00	...
Pavagada ...	...	...	..	10	...	..	...	34	— 0	34	Kadale	8·00	8·00	9·70
Kunigal ...	...	...	..	2	..	44	...	25	+ 0	19				
Koratagere ...	...	..	...	...	1	10	...	49	+ 0	61				
Turuvekere ...	...	22	...	15	...	57	...	28	+ 0	29				
District average...	...	3	...	9	...	69	...	46	+ 0	23				

District and Station.	Rainfall up to 8 A. M. on Saturday. This week.		Last ten years' average for the corresponding week.		Up to the end of the week from 1st January 1906 — This year.		Average of past ten years.		Excess (+) or defect (−) of column 4 compared with column 5.		Price of food grains in seers per rupee and market fluctuations in prices of food grains.			
1	2		3		4		5		6		7			
	I.	c.	I.	c.	I.	c.	I.	c.	I.	c.		This week	Past week.	Past ten years' fortnightly average.
												Seers.	Seers.	Seers.
MYSORE.														
Mysore ...	...	7	...	19	2	41	...	41	+2	...				
Chamrajnagar ...	...	...	...	9	...	...	...	81	−0	81				
Seringapatam ...	...	35	...	17	...	71	...	55	+0	16	Rice, 2nd sort.	8·25	8·25	10·37
Hunsur ...	...	3	...	40	...	12	...	82	−0	70				
Yedatore ...	...	...	...	16	...	65	...	50	+0	15	Ragi	15·00	15·00	21·83
Heggaddevankote ...	...	...	3	2	...	...	4	4	−4	4	Kulthi	13·00	13·00	...
Gundlupet ...	...	...	...	15	1	44	...	83	+0	61	Kadale	9·00	9·00	10·58
Nanjangud ...	...	10	...	23	...	89	...	63	+0	26				
T.-Narsipur ...	...	...	...	15	...	98	...	76	+0	22				
Malvalli ...	...	...	...	3	...	39	...	47	−0	8				
Mandya ...	...	...	...	11	1	90	...	36	+1	54				
Krishnarajpete ...	...	...	...	31	...	80	...	49	+0	31				
Nagamangala ...	...	...	...	3	1	38	...	21	+1	17				
District average...	...	4	...	38	...	89	...	93	−0	4				
HASSAN.														
Hassan ...	...	...	...	36	...	9	...	63	−0	54				
Manjarabad (Saklespur)	...	...	...	32		84	...	91	−0	7				
Arkalgud ...	1	65	...	20	2	60	...	92	+1	98				
Belur ...	...	...	...	22	1	26	...	60	+	66	Rice, 2nd sort.	8·50	8·50	10·50
Channarayapatna ...	1	...	...	7	1	10	...	28	+0	82				
Arsikere ...	...	...	...	12	...	...	...	44	−0	44	Ragi	16·00	17·00	24·87
Hole-Narsipur ...	...	74	...	13	1	19	...	70	+0	49	Kulthi	12·00	12·00	...
Alur ...	...	...	...	15	...	5	...	46	0	41	Kadale	8·50	9·00	9·68
District average...	...	42	...	20	...	89	...	58	+0	31				
SHIMOGA.														
Shimoga ...	...	...	...	21	...	94	...	41	+0	53				
Channagiri ...	...	...	...	12	...	20	...	34	−0	14	Rice, 2nd sort	8·00	8·00	12·44
Honnali ...	...	...	...	18	1	20	...	77	+0	43				
Shikarpur ...	...	...	...	29	...	...	...	32	−0	32	Ragi	16·00	16·00	30·86
Sorab ...	...	...	...	14	...	43	...	27	+0	16	Kulthi	11·00	11·00	...
Sagar ...	...	...	...	16	1	89	...	46	+1	43				
Nagar (Kallurkatte) ...	...	...	...	18	...	56	...	37	+0	19				
Tirthahalli ...	...	...	...	41	1	15	...	56	+1	59				
Kumsi ...	...	...	...	41	...	16	...	53	−0	37				
District average...	...	...	...	23	...	73	...	45	+0	28				
KADUR.														
Chikmagalur ...	...	...	...	23	1	55	...	78	+0	77				
Kadur ...	...	...	...	8	...	...	...	33	−0	33	Rice, 2nd sort	8·00	8·00	10·70
Tarikere ...	...	...	...	12	...	76	...	28	+0	48				
Koppa ...	...	...	...	27	2	69	...	77	+1	92	Ragi	15·00	15·00	23·70
Mudgere ...	...	...	...	38	...	65	...	83	−0	8	Kulthi	11·00	11·00	...
Yedahalli ...	...	...	...	41	...	40	...	63	−0	23	Kadale	8·00	8·00	10·20
Sringeri ...	...	...	...	14	1	3	...	46	+0	57				
District average ...	...	...	...	23	1	1	...	58	+0	43				
CHITALDRUG.														
Chitaldrug ...	...	...	...	7	1	22	...	16	+1	6				
Challakere ...	...	...		3	...	8	...	38	−0	30	Rice, 2nd sort	7·50	7·50	10·35
Hiriyur ...	...	...	...	14	...	11	...	27	−0	16				
Holalkere ...	...	...	...	15	...	20	...	38	−0	18	Ragi	16·00	16·00	27·40
Davangere ...	...	...	...	10	...	41	...	43	−0	2	Kulthi	13·00	14·00	...
Molakalmuru ...	...	...	...	3	...	24	...	7	+0	17	Cholum	15·00	15·00	24·30
Jagalur ...	...	...	...	7	...	27	...	56	−0	29	Kadale	9·00	9·0	10·30
Hosdurga ...	...	...	...	8	...	10	...	31	−0	21				
Harihar ...	...	...	...	...	2	94	...	19	+2	75				
District average...	...	...	...	7	...	62	...	31	+0	31				
Provincial average...	...	7	...	19	...	81	...	62	+0	19				

Note—Rice (husked)—Oryza Sativa.
Ragi—Eleusine Corocana.
Kulthi—(Horse gram) Dolichos Biflorus.
Cholum—Sorghum Vulgare
Kadale—(Bengal gram) Cicer Arietinum.

DISTRICT REPORTS.

8. Markets how supplied.

9. Progress of agricultural operations, state of standing crops, prospects and probable outturn of harvests, serious damage done to crops by insects or other natural calamities.

10. Prospects of season, tracts in which the rainfall has been insufficient, areas affected by scarcity, number of people under relief, and state of food stocks.

11. Public health.

12. Remarks as to the condition of agricultural stock, failure of pasturage, of fodder, etc.

BANGALORE CIVIL AND MILITARY STATION.

		Normal.	*Current.*	
Prices of food grains—	Rice	... 10 to 11	6½ to 7	seers per rupee.
	Ragi	... 25 to 30	16 to 17	

Agricultural operation—Ragi thrashing.

Outturn of harvests is from 5 to 6 annas.

Cattle are in good condition.

Water and fodder sufficient.

BANGALORE CITY AND TALUKS.

8. Market well supplied.

9. Standing crops are in good condition. Sugar-cane is being harvested and resown throughout the district. The sweet potato harvest is closing in the Hoskote Taluk. The probable outturn of dry crops is about on an average 8 annas, that of wet crops about 6 annas.

10. Prospects of the season moderate. Rain is anxiously awaited. The prices of food stocks have not risen.

11. Public health generally good. Fever is reported to prevail in Hoskote.

12. Cattle healthy. Foot and mouth disease is reported to prevail in some parts of Hoskote. In some places water is obtained with difficulty from wells sunk in the beds of tanks and streams.

KOLAR.

8. Market well supplied.

9. Standing crops are in good condition. Sugar-cane is being sown in Bowringpet, Mulbagal, Sidlaghatta, Chikballapur, Bagepalli, Goribidnur, Srinivaspur and Gudibanda; and it is also being milled in almost all the taluks. Vysakhi paddy is being harvested in Sidlaghatta and Bagepalli.

10. Prospects of the season depend upon early mungar rains. Food stocks available.

11. Public health generally good.

12. Water and fodder generally available, but the supply of water is running short. Pasture in fields and grazing lands is almost exhausted.

TUMKUR.

8. Market well supplied.

9. Paddy in Tumkur, Maddagiri and Pavagada, kadale in Gubbi, Maddagiri, Tiptur, Kunigal and Koratagere; cholum in Maddagiri, Sira and Pavagada; sugar-cane in Gubbi and

Kunigal, and cotton in Sira and Pavagada are being harvested. Paddy and sugar-cane are sown in Maddagiri. Standing crops in Tumkur, Chikmayakanhalli and Tiptur are withering for want of water; elsewhere they are in a pretty fair condition. The following is the estimated outturn of crops :—

Maddagiri—Paddy 8 annas, kadale 4 annas, cholum 5 annas.

Sira—Cholum 2 to 8 annas, cotton 1 to 4 annas.

Gubbi—Kadale 4 annas.

Pavagada—Paddy and cholum 4 annas, cotton 2 annas.

Kunigal—Kadale 2 annas, sugar-cane 4 annas.

Koratagere—Kadale 6 to 8 annas.

10. Prospects not encouraging. Food stocks sufficient for the present. Supply of water in wells is diminishing in several parts of the district. Mungar rains are anxiously awaited.

11. Public health generally good, except that small pox is prevalent in parts of Gubbi, Tiptur and Turuvekere.

12. Cattle healthy, except that foot and mouth disease is prevalent in parts of Gubbi, and Tiptur. In parts of Sira, Tiptur and Turuvekere date leaves are used as fodder for cattle. Water is drawn from wells in most parts of the District for cattle to drink.

MYSORE.

8. Market well supplied.

9. Standing sugar-cane, mulberry and cotton crops are reported to be fair in parts of Seringapatam, Malvalli and Krishnarajpete; and good in parts of Mysore, Nanjangud, T.-Narsipur and Nagamangala. Lands in parts of Seringapatam are being ploughed and made ready for sowing. The probable outturn of crops is as follows :—

T.-Narsipur—Sugar-cane and mulberry 12 annas.

Krishnarajpete—Sugar-cane 6 to 8 annas.

10. Prospects of the season not bad. Food stocks sufficient for the present. Want of rain is much felt all over the district.

11. Public health good, but small-pox is reported to be still prevailing in Heggaddevankote.

12. Cattle in parts of Chamrajnagar and Malvalli are reported to be suffering from foot and mouth disease. In other parts they are healthy. Fodder is generally available. Difficulty for water is greatly felt in parts of Chamrajnagar, Seringapatam, Heggaddevankote, Mandya and Nagamangala.

HASSAN.

8. Market fairly supplied. Prices high.

9. Sugar-cane in Hassan, Belur, Hole-Narsipur and Alur; and paddy in Hassan, and Manjarabad are reported to be in a fair condition. Sugar-cane and paddy in Arsikere are reported to be withering for want of rain. The outturn of sugar-cane in Hole-Narsipur is estimated at 10 annas.

10. Prospects of the season fair. Food stocks sufficient for the present.

11. Public health generally good. Small-pox is reported to be prevalent in several parts of the district.

12. Cattle generally healthy, but foot and mouth disease is reported to exist in parts of Manjarabad, Belur, Arsikere and Arkalgud. Fodder and water generally available except in parts of Arsikere and Channarayapatna, where some difficulty is felt.

SHIMOGA.

8. Market well supplied. Prices high.

9. The Vysakhi paddy and sugar-cane plants are in a fair condition in Sagar and Nagar; but the young plants are not thriving well in certain parts of these taluks for want of water supply. The kar-paddy under Sulekere is thriving pretty well. In other taluks there are no agricultural operations in progress at present for want of rains.

10. Food stocks sufficient for the present except in parts of Shikarpur, Sorab and Kumsi.

11. Public health good.

12. Cattle healthy. Fodder supply is running short in parts of Honnali, Shikarpur, Sorab and Kumsi. Water-supply is failing in Shimoga, Honnali, Shikarpur, Sorab, Sagar and Kumsi.

KADUR.

8. Market fairly supplied.

9. Sugar-cane is being planted in Tarikere and Kadur. The standing crops, *viz.*, sugar-cane and cotton in parts of Tarikere; kar paddy in parts of Koppa; sugar-cane and kar paddy in parts Chikmagalur and Kadur are fairly good conditon. Sugar-cane and cotton in parts of Tarikere, and sugar-cane in parts of Kadur are being harvested. Ploughing and other agricultural operations are delayed for want of rain.

10. Prospects of the season fair, but rain is needed for standing crops. Food stocks available and sufficient for the present.

11. Public health generally good except that small-pox prevails in parts of Chikmagalur and Mudgere.

12. Foot and mouth disease of cattle in the district is reported to be subsiding. Water and fodder generally available, water-supply is scanty in parts of Chikmagalur, Kadur, Tarikere and Yedahalli.

CHITALDRUG.

8. Market well supplied.

9. The standing crops, *viz.*, choum, wheat, sugar-cane, navane, onions, garlic and tobacco are reported to be in fairly good condition in Molakalmuru. The estimated outturn of crops harvested during the week is as follows :—

Hiriyur—Kadale, wheat and ragi 2 annas, Navane, togari and cotton 4 annas, Ragi under kapile wells 8 to 10 annas, Paddy under kapile wells 8 to 10 annas.

Holalkere—Cotton 6 annas.

Davangere—Kadale and sugar-cane 8 annas.

Molakalmuru—Kadale 4 annas.

Harihar—Cotton 4 to 8 annas

10. Prospects of the season fair. Food stocks sufficient.

11. Public health good.

12. Cattle healthy. Water and fodder procurable in limited quantities.

BANGALORE,
11th April 1906.

B. K. VENKATA VARADA IYENGAR,
Secy. to the Govt. of H. H. the Maharaja of Mysore,
Gen. & Rev. Dept.

Ret 20/4

176

The Mysore Gazette.

Vol. 41.] PUBLISHED BY AUTHORITY. [No. 16.

BANGALORE, THURSDAY, APRIL 19, 1906.

☞ Separate paging is given to the Parts in order that they may be filed as distinct compilations.

CONTENTS.

PART I.—Notifications by the Government of His Highness the Maharaja of Mysore.

PART II.—Notifications by the Government of India; The Hon'ble the Resident in Mysore; Chief Judge; Survey and Inam Superintendent; Comptroller; Chief Engineer; Mysore State Railway; Amrut Mahal Department; Inspector-General of Registration; Senior Surgeon; District and Sessions Judges; Sub-Judges; Deputy Commissioners of Districts; Forest Officers; Presidents, Bangalore and Mysore City Municipalities; Season Reports; Mortuary and Meteorological Statements; Postal Notices; Civil and Military Station Notifications, &c.

PART III.—Legislative Measures and Rules thereunder.

PART IV.—Official Papers.

PART I.

Notifications by the Government of His Highness the Maharaja of Mysore.

GENERAL AND REVENUE.

No. 10603—*L. B.* (399-05)-2, *dated* 16*th April* 1906.

As in Government Order No. J. 2766—Regist. 7-9, dated the 29th March 1905, the strength of the Taluk Board was raised from twelve to fifteen members, the following appointments of additional members for the several Taluk Boards in the Hassan District are ordered:—

HASSAN TALUK.

Ex-officio Member.

The Sub-Registrar.

Non-official Members.

1. Mr. Nadig Chennakesavaiya, Landholder.
2. ,, Pasare Dharanappa, Landholder and Sahukar.

MANJARABAD TALUK.

Ex-officio Member.

The Sub-Registrar.

Non-official Members.

1. Mr. Bellur Nanje Gowda, Landholder and Mande Patel.
2. ,, Marasumakki Nanje Gowda, Landholder and Patel.

BELUR TALUK.

Ex-officio Member.

The Sub-Registrar.

Non-official Members.

1. Mr. Sivananje Gowda, Landholder and Patel.
2. „ Manjaiya, Jodidar and Shanbhog.

ARSIKERE TALUK.

Ex-officio Member.

The Sub-Registrar.

Non-official Members.

1. Mr. Krishnappa, Shanbhog.
2. „ Range Gowda, Police Patel of Kenkere.

CHANNARAYAPATNA TALUK.

Ex-officio Member.

The Sub-Registrar.

Non-official Members.

1. Mr. A. K. Subbaraya Chetty, Landholder and Merchant.
2. „ Tirunaraniengar, Pensioned Amildar and Landholder.

HOLE-NARSIPUR TALUK.

Ex-officio Member.

The Sub-Registrar.

Non-official Members.

1. Mr. Narasimhachar, Shanbhog.
2. „ Bargur Channanna, Landholder.

ARKALGUD TALUK.

Ex-officio Member.

The Sub-Registrar.

Non-official Members

1. Mr. Maridyave Gowda, Patel.
2. „ Venkatasubbabhatta, Jodidar.

ALUR TALUK.

Ex-officio Member.

The Sub-Registrar.

Non-official Members.

1. Mr. Chitambar Krishnaiya, Shanbhog and Landholder.
2. „ Chikkanagal Sidde Gowda, Landholder.

No. J. 2859—*Cts.* 261-2, *dated* 14—16*th April* 1906.

Under Section 641 of the Code of Civil Procedure, the Government of His Highness the Maharaja are pleased to exempt Jayadeva Murugarajendra Swami of the Murugi Matt at Chitaldrug, from personal appearance in Civil Courts.

2. This privilege is to be considered personal and not hereditary.

No. J. 2862—*Cts.* 260-2, *dated* 14—16*th April* 1906.

Under Section 641 of the Code of Civil Procedure, the Government of His Highness the Maharaja are pleased to exempt Sri Sankara Bharati Swami, the present presiding Priest of the Kudli Sringeri Matt, from personal appearance in Civil Courts.

2. This privilege is to be considered personal and not hereditary.

No. 10755—*Ml.* (412-05)-4, *dated* 17—18*th April* 1906.

Mr. Periyapatam Doddanna Setti is appointed a member of the Talkad Municipal Board, *vice* Mr. Venkata Rao, who left the station.

No. 10534—*Ml.* (276-05)-8, *dated* 11*th April* 1906.

Under Section 6 of the Land Acquisition Regulation, it is hereby declared that the undermentioned houses and lands are required for a public purpose, *viz.*, for opening out roads, etc.

No.	Name of owner	Description of land or building	Extent to be acquired			Boundaries			
			Length	Breadth	Total square yards	East	West	North	South
1	Tamanachari	Mud roofed vacant ...	24	5	12	Road	Hanumanthachari's house.	Vacant land ...	Vacant land.
2	Subbamma	Mud roofed ...	10	3	30	Owner's land ...	Meerabakshi's house ..	Road	Do
		Vacant ...	7	4	28	Do ...	Do ...	Do ...	Owner's house.
3	Khalander Sab	Do	17	3½	59	Mohadeen Sab's house	Owner's house ...	Subbamma's house ...	Vacant land.
4	Isumiya Sabee	Do ...	35	4	140	Vacant land ...	Vacant land ...	Vacant land ...	Do.
5	Sharfudeen Sabee ..	Mud roofed ...	4	3	12	Do ...	Owner's house ..	Do ...	Do
		Do ...	4	5	20	Owner's house ...	Vacant land ..	Owner's house ...	Do
6	Yallappa	Do ...	5	1	5	Do. ...	Road	Road	Owner's house.
7	P. Panchanatha Rao	Vacant land ...	40	20	800	Chaman Sabeed and Phakir Sab's houses	Owner's compound wall	Rangare Guniyappa's house.	Anjaneya's temple.

No. R. 12553—*L. R.* 437-05-5, *dated* 28*th March* 1906.

Under Section 6 of the Land Acquisition Regulation, No. VII of 1894, it is hereby declared that the land described hereunder is required for a public purpose, *viz.*, for a camping ground; and under Sections 7 and 3 (*c*) of the said Regulation, the Assistant Commissioner in charge of the Heggaddevankote group of taluks is authorized to take order for the acquisition of the said land :—

District	Taluk	Hobli	Village	Name of khatedar	Survey No.	Dry, wet or garden	Total extent		Assessment	Extent now required		Boundaries			
												East	West	North	South
							A.	g.	Rs. a. p.	A.	g.				
Mysore	Heggaddevankote	Hobli Antersante	Nisna	Syed Oomar *bin* Rahiman Sab ... Enjoyer Syed Ahamed Sab	53	Dry	49	12	17 0 0	31	17*	Nisna Survey Nos. 50, 51 & 49.	Karapur Survey Nos. 7 & 8	Mysore Manantoddy road	Kabbani river
				Do ...	50	Dry	14	1	8 0 0	2	20	Nisna Survey No. 50	Survey No. 53	Survey No. 53	Survey No. 53

* Of this 10 acres and 12 guntas is phut kharab included in the camping ground.

No. R. 12592—*L. R.* 554-05-3, *dated* 29*th March* 1906.

Under Section 6 of the Land Acquisition Regulation, No. VII of 1894, it is hereby declared that the land described hereunder is required for a public purpose, *viz.*, building houses in Madapura village, Heggaddevankote Taluk; and under Sections 7 and 3 (*c*) of the said Regulation, the Assistant Commissioner in charge of the Hunsur group of taluks is authorized to take order for the acquisition of the said land :—

District—Mysore.
Taluk—Heggaddevankote.
Hobli—Hampapura.
Village—Madapura.
Name of khatedar—Kappani Gauda.
Survey No.—110.
Total extent—5 acres and 7 guntas.
Assessment—Rs. 4.
Extent now required—2 acres and 27 guntas.

Boundaries—
East—Lane.
West—Survey Nos. 30, 31.
North—Survey No. 111.
South—Village and Survey No. 29.
Remarks—As there are no vacant building sites in the village this land is wanted to build houses by the villagers and has been marked out in accordance with the modern sanitary requirements.

No. R. 12594—*L. R.* 553-05-2, *dated* 29*th March* 1906.

Under Section 6 of the Land Acquisition Regulation, No. VII of 1894, it is hereby declared that the land described hereunder is required for a public purpose, *viz.*, building houses in Kyathanhalli village; and under Sections 7 and 3 (*c*) of the said Regulation, the Assistant Commissioner in charge of the Hunsur group of taluks is authorized to take order for the acquisition of the said land :—

District—Mysore.
Taluk—Heggaddevankote.
Hobli—Hampapura.
Village—Kyathanhalli.
Name of khatedar—Kantha Dasi.
Survey No.—61—3.
Total extent—2 acres and 27 guntas.
Assessment—Rs. 2.
Extent now required—1 acre and 12 guntas.

Boundaries—
East—Survey No. 80.
West—Survey Nos. 58 and 60.
North—Village.
South—Survey No. 62.
Remarks—As there is no vacant site in the village this land is wanted for building houses by the villagers and the land is contiguous to the existing houses.

No. R. 12622—*L. R.* 561-05-5, *dated* 30*th March* 1906.

Under Section 6 of the Land Acquisition Regulation, No. VII of 1894, it is hereby declared that the land described hereunder is required for a public purpose, *viz.*, for constructing a

Police Station with lines and a musafirkhana at Talkad, T.-Narsipur Taluk; and under Sections 7 and 3 (c) of the said Regulation, the Assistant Commissioner in charge of the Nanjangud group of taluks is authorized to take order for the acquisition of the said land :—

District—Mysore.

Taluk—T.-Narsipur.

Hobli—Talkad.

Village—Vadayandahalli.

Name of khatedar—Siddabasavadevaru.

Survey No.—265.

Dry, wet or garden—Garden.

Total extent—4 acres and 14 guntas.

Assessment—Rs. 8-8-0.

Extent now required—

Dimensions in yards—East to west 44, north to south 66.

Total—24 guntas.

Boundaries—

East—Talkad-Mudukthore road.

West—Owner's remaining land Survey No. 265.

North—Survey No. 266 and Narsipur-Talkad road.

South—Owner's remaining land Survey No. 265.

No. R. 12738—*L. R.* 447-05-5, *dated* 31*st March*—2*nd April* 1906.

Under Section 6 of the Land Acquisition Regulation, No. VII of 1894, it is hereby declared that the lands described hereunder are required for a public purpose, *viz.*, for extending the Palace Zoo grounds at Mysore in the Mysore District; and under Sections 7 and 3 (c) of the said Regulation, the Deputy Commissioner of the Mysore District is authorized to take order for the acquisition of the said lands :—

District	Taluk	Hobli	Village	Name of khatedar	Survey No.	Dry, wet or garden	Total extent	Assessment	Extent now required		Boundaries			
									Extent	Assessment	East	West	North	South
							A. g.	Rs. a. p.	A. g	Rs. a. p.				
Mysore	Mysore	Mysore	Mysore	Rachiah ...	500	Dry and garden	3 17 2 0 5 17	13 0 0	5 17	13 0 0	Govinda Row's and Rama Row's garden.	Road ...	Srinivasiengar's garden.	City boundary.
				Do ...	501	Garden	0 25	2 12 0	0 25	2 12 0	Syed Mohidin's land.	Do ...	S. No. 502	S. No. 500.

No. R. 13350—*L. R.* 609-05-3, *dated* 16*th April* 1906.

Under Section 6 of the Land Acquisition Regulation, No. VII of 1894, it is hereby declared that the lands described hereunder are required for a public purpose, *viz.*, for forming a new village, Hiranyapalli in the Chintamani Taluk, Kolar District, and under Sections 7 and 3 (c) of the said Regulation, the Assistant Commissioner in charge of Chintamani group of taluks is authorised to take order for the acquisition of the said lands :—

District	Taluk	Hobli	Village	Name of khatedar	Survey No.	Dry, wet or garden	Total extent	Assessment	Extent now required		Boundaries			
									Extent	Assessment	East	West	North	South
							A. G.	Rs. a. p.	A. G.	Rs. a. p.				
Kolar	Chintamani	Chintamani	Hiranyapalli	Chikkanaga ...	88 2	Dry ..	2 28	4 12 0	2 28	4 12 0	Bachanna's field	Kuruba Kempa's field	Survey No. 89, Honnurappa	Kolar Muniappa's field.
				Honnurappa	89	Dry ...	3 21	7 0 0	3 21	7 0 0	Do ...	Chintamani Munia's field	Tope ...	Chikkanaga.

No. R. 13345—*Forest* 148-05-5, *dated* 16*th April* 1906.

Under Section 35 (iii) of the Mysore Forest Regulation, XI of 1900, the Government of His Highness the Maharaja of Mysore are pleased to declare that the land, the limits of which are described in the schedule annexed hereto, shall be *reserved land* for the purpose of General Rules for the management of District Forests published under Government Notification No. 245-1300, dated the 2nd October 1901.

SCHEDULE.

District	Taluk	Hobli and village	Approximate area	Name of block	Situation and boundaries
Shimoga	Shimoga	Hiriyur	1406 acres or 2 square miles and 126 acres	Siddapur	*Situation.*—District jungle to the west of 3rd mile of Benkipur-Umblebyle road. *Boundaries.* *North.*—Starting from the angle in the boundary of Siddapur and Kallahalli, 11 chains to the north of the trijunction bandhs of the said two villages and Huliyur Ramankoppa, the line runs in a south-easterly direction for 42 chains through Survey No. 123 of Siddapur to the south-west corner of Survey No. 122 (Tank) of the same village, then south-east for 55 chains through Survey No. 123 to the southernmost corner of Survey No. 111 of the same village; then east for 34 chains to the south-west corner of Survey No. 125 of the same village, then east for 7 chains through Survey No. 124 of Siddapur to a point in the boundary between Siddapur and Nanjapur, 2½ chains south-west of the south-east corner of Survey No. 125 of Siddapur. Then east for 39 chains through Survey No. 29 of Nanjapur to the south-west corner of Survey No. 24 of the same village, then east for 17 chains to cart-track from Bommanakatte to Nanjapur, then in a south-easterly direction for 21 chains through Survey No. 21 of Nanjapur to a point 8 chains north-west of the trijunction bandhs of Nanjapur, Bullapur and Bommanakatte, then south-east for 22 chains through Survey No. 73 of Bullapur to the south-west corner of Survey No. 72 of the same village. *East.*—Thence the line runs south-east for 40 chains through Survey No. 73 of Bullapur to the crossing of Benkipur-Umblebyle road with the cart-track from Bullapur to Thimlapur. *South.*—Then south-west for 26 chains along the said road to the north-east corner of Survey No. 41 of Bommanakatte, then south-west for 11 chains on the north side of the same survey number to its north-west corner; then west for 26 chains through Survey No. 38 of Bommanakatte to the north-west corner of Survey No. 39 of the same village; then south-west for 42 chains through Survey No. 38 of Bommanakatte to the trijunction bandhs of Nanjapur, Bommanakatte and Heriyur; then west for 48 chains along the boundary between Heriyur and Nanjapur to the common boundary bandhs of Siddapur, Nanjapur, Heriyur and Kalankatte; then south-west, west and north-west along the demarcation line of the Umblebyle State Forest for 82 chains to the crossing of the said demarcation line with the boundary between Siddapur and Huliyur Ramankoppa. *West.*—Thence the line runs in a northern direction for 18 chains, then north-west for 35 chains along the boundary between Siddapur and Huliyur Ramanakoppa to the trijunction bandhs of the said two villages and Kallahalli; then north for 11 chains along the boundary between Siddapur and Kallahalli to the starting point.

No. J. 2899—*Cts.* 241-2, *dated* 17*th April* 1906.

In exercise of the power conferred by Section 14 of the Mysore Civil Courts Regulation, I of 1883, the Government of His Highness the Maharaja of Mysore are pleased to direct that appeals from the decrees and orders of the Munsiff of Yedahalli shall lie direct to the Subordinate Judge of Chikmagalur.

No. G. 5056—*G. M.* 4-05-14, *dated* 12*th April* 1906.

Whereas by Notification of the Government of India in the Foreign Department, No. 176, dated the 31st December 1875, the Indian Christian Marriage Act of 1872 was, with certain modifications, declared to apply to the territories of Mysore, so far as regards marriages between persons one of whom is a Native Christian subject of Mysore and neither of whom is a Christian British subject.

In exercise of the powers conferred by Sections 6 and 9 respectively of the said Act, the Government of His Highness the Maharaja of Mysore are pleased—

(*a*) to grant a license to the Revd. Stanley J. Cox, M.A., of the London Mission to solemnize marriages within the territories of Mysore and outside the limits of the Civil and Military Station of Bangalore, and

(*b*) to license the said Revd. Stanley J. Cox, M.A., to grant certificates of marriage within the said territories between Native Christians, one of whom is a Native Christian subject of Mysore and neither of whom is a Christian British subject.

CIVIL APPOINTMENTS.

Heads of Departments and all other officers concerned are informed that Notifications in the Gazette are in future to be accepted as disposing of all references regarding leave, transfers, appointments, powers and other personal questions affecting Gazetted officers, as to which orders are gazetted by the Government in this Part of the Gazette, and that any subsidiary orders as to relief of their subordinates and the like, which such notifications necessitate, must be issued by them on receipt of the Gazette, as no other orders will be issued by Government.

No. 10568—*Med.* (155-05)-6, *dated* 10—11*th April* 1906.

Under Article 188 of the Mysore Service Regulations, Mr. W. Sreenivasaiengar, Assistant Surgeon, doing duty in the Victoria Hospital at Bangalore, was granted nine days' privilege leave from the 10th to the 18th March 1906.

No. 10569—*Med.* (193-05)-4, *dated* 10—11*th April* 1906.

Mr. C. G. Hanuman Singh, L.M.&S., Assistant Surgeon, was, under Article 188 of the Mysore Service Regulations, granted privilege leave of absence for two months and twenty-four days, with effect from the 12th December 1905.

No. J. 2876—*Police* 157-2, *dated* 16*th April* 1906.

Under Article 188 of the Mysore Service Regulations, Mr. T. F. Wilkinson, Acting Assistant Superintendent of Police, under transfer to the Kadur District, is granted one months' privilege leave of absence, with effect from the 27th March 1906.

No. J. 2865—*Police* 154-2, *dated* 14—16*th April* 1906.

Under Article 188 of the Mysore Service Regulations, Mr. N. Subba Rao, B.A., Head-quarter Office Assistant to the Inspector-General of Police, is granted one week's privilege leave of absence, with effect from such date as he may avail himself of the same.

No. R. 13322—*L. R.* 410-05-6, *dated* 12*th April* 1906.

Under Article 188 of the Mysore Service Regulations, Mr. K. Hanumantha Rao, Amildar of the Hosdurga Taluk, is granted privilege leave of absence for one month, with effect from the 30th March 1906.

2. During the above period, Taluk Sheristadar Nanjundaiya is appointed to act as Amildar and 3rd Class Magistrate.

No. R. 13367—*L. R.* 604-05-2, *dated* 16*th April* 1906.

Under Article 188 of the Mysore Service Regulations, Mr. C. Ranganatha Rao Saheb, Amildar of Dodballapur, is granted privilege leave of absence for two months, with effect from the date of availment.

2. During the above period, Mr. V. Parthasarathi Iyengar, Amildar, will be in charge of the Dodballapur Taluk.

No. R. 13381—*L. R.* 610-05-2, *dated* 17*th April* 1906.

Under Article 188 of the Mysore Service Regulations, Mr. B. Krishna Rao, Extra Assistant Commissioner in charge of the Sagar group of taluks in the Shimoga District, is granted privilege leave of absence for one month from the date on which he avails himself of the same.

No. R. 13439—*L. R.* 109-05-6, *dated* 18*th April* 1906.

Under Article 188 of the Mysore Service Regulations, Mr. E. C. Sadasiva Pillay, Amildar of the Jagalur Taluk, is granted privilege leave of absence for ten days, with effect from the 1st April 1906 or from the date on which he avails himself of the same, the Taluk Sheristadar being placed in charge of the taluk during the absence of Mr. Sadasiva Pillay on leave or until further orders, with 3rd Class Magisterial powers.

No. R. 13447—*L. R.* 460-05-9, *dated* 18*th April* 1906.

Mr. Burli Krishna Rao, Head-quarter Inspector of Police of the Chitaldrug District, is appointed to act as Amildar and 3rd Class Magistrate of the Chitaldrug Taluk until he is relieved by Mr. P. Subba Rao, Acting Amildar, who has been posted to that taluk in Notification No. R. 11459—L. R. 460-05-5, dated the 3rd March 1906.

The Petition Box kept at the Office of the General and Revenue Secretariat, Bangalore, will be cleared at 12 noon every day by the Secretary to Government, General and Revenue Department, and in his absence from Bangalore, by the Deputy Secretary.

By Order,

B. K. VENKATA VARADA IYENGAR,

Secy. to Govt., Gen. & Rev. Dept.

PUBLIC WORKS.

No. 357—2347, *dated* 11*th April* 1906.

The undermentioned officials of the Mysore Public Works Department have been dismissed from Government service and are ineligible for future employment in the State :—

1. B. G. Rama Rao, Marahmat clerk, Deputy Commissioner's office, Bangalore District.
2. M. Narasimhamurti Rao, Taluk Maistry, attached to the Kolar Division.

No. 364—2379, *dated* 14*th April* 1906.

Mr. V. Rangasawmy Iyengar, B.C.E., Executive Engineer, Water-supply and Stores Division, is granted privilege leave of absence for fifteen days, with effect from the 9th instant.

By Order,

BERNARD DAWES, LIEUT., R. E.,

for *Secy. to Govt., P. W. Dept.*

183

The Mysore Gazette.

Vol. 41.] PUBLISHED BY AUTHORITY. [No. 16.

BANGALORE, THURSDAY, APRIL 19, 1906.

PART II.

Notifications by Govt. of India, Resident, Chief Court, &c.

BEFORE THE HON'BLE THE RESIDENT IN MYSORE, AT BANGALORE.

Application in file No. 107 *of* 1906.

In the matter of the estate of V. Sundaralinga Chetty, late of the Civil and Military Station, Bangalore, but now ... ... *Deceased.*

Kokilamba Ammal .. .. *Applicant.*

Whereas Kokilamba Ammal, resident of the Civil and Military Station, Bangalore, claiming to be the widow of the said V. Sundaralinga Chetty, deceased, has applied for a certificate under Section 17, Act VII of 1889, to collect the sum of Rs. 5,354, due to the estate of the said deceased under Policy No. 335 7006, issued by the New York Life Insurance Company, Calcutta.

Notice is hereby given of the said application; and all claimants in the estate of the said V. Sundaralinga Chetty, deceased, are invited to appear before the Hon'ble the Resident at Bangalore, on Wednesday the 25th of April 1906 at 11 A.M., when the petition of the said Kokilamba Ammal will be heard, and the right to the certificate determined.

Given under my hand and seal this 30th day of March 1906.

By Order,
N. S. TIRUMALAI AIYANGAR,
Registrar.

FINANCIAL DEPARTMENT.

Circular No. 2084—*T. A.* 163, *dated 9th April* 1906.

To—All Heads of Departments and Deputy Commissioners of Districts.

Under Articles 528 (2) and (4) and Note (1) to Article 561 (ii) of the Mysore Service Regulations, Non-gazetted and Ministerial Officers of Government and menial servants of certain classes are entitled to draw their actual travelling expenses by road, subject to a maximum of a specified rate per every mile of road travelled. It would appear that in a large number of cases, Heads of Offices or Departments allow these officers or servants the maximum mileage rates admissible to them without reference to the actual expenditure. This is irregular and leads to correspondence and delay in passing the bills in audit. Countersigning Officers are therefore requested to carefully scrutinize all claims of Non-gazetted Officers and menials in the light of the above remarks and not to pass the maximum rates as a matter of course.

N. G. BASU,
Comptroller.

EXCISE DEPARTMENT.

SALE OF SEPARATE ARRACK SHOPS FOR 1906-07.

Notification No. 2213, dated 21st March 1906.

1. Notice is hereby given that the exclusive right of selling arrack in each of the separate shops specified in the appended schedule* for the twelve months beginning with 1st July 1906 and ending with 30th June 1907, will be put up to public auction at upset prices, by the respective Deputy Commissioners or by Revenue Assistant Commissioners or by Divisional Officers of the Excise Department or other Officers specially authorized by the Deputy Commissioners for the purpose, on the dates and at the Taluk Head-quarters or other places mentioned below, subject to the conditions hereinafter set forth. If the sales are not completed on abovenamed days, they will be continued on the next following days (close holidays excepted).

2. (*a*) Each bidder at the auction will deposit a sum of Rs. 60 for shops in the Kolar Gold Fields, Rs. 25 for those in the Mysore and Bangalore Cities and Rs. 10 for those in other places, or such other reasonable amount as may be fixed by the officer conducting the sale, previous to bidding. It will, if offered, be received at any time within three days prior to the date of sale, provided that the Government may, at any time, dispense with such initial deposit. The deposits made by unsuccessful bidders if not forfeited as hereinafter provided, will be returned at the close of the sale. The shops or group of shops will be knocked down to the approved highest bidder, subject to formal confirmation by the Deputy Commissioner, who will be at liberty to accept or reject any bid at his discretion without assigning reasons for the same. Such formal confirmation will, *unless revised by Government for special reasons*, be tantamount to an acceptance of the bid and will be necessary whether the sale be held by the Deputy Commissioner himself or by any other officer appointed by him. Parties intending to bid must attend either in person or by duly accredited agents. Should there be no bid above the upset price, for any shop singly, the officer conducting the sale may, in consultation with the Excise Divisional Officer, if present, club together more than one shop but not more than two in the District Head-quarter taluks and Kolar Gold Fields and six in other places or, if necessary, reserve shops for which there may be no bids, for disposal hereafter. He may, subject to formal confirmation of the Deputy Commissioner, sell the right in any particular case by means of tenders or by private negotiation. He may also lower the upset price at his discretion. The officer conducting the sale may at his discretion, and without assigning any reason, refuse to accept the bid of any person, on the ground that he has been convicted by a criminal court of such an offence, or has been guilty of such breach of the conditions of the license, or of a contract under the Excise Regulation or Opium Act, as to render him undesirable as a holder of a license, or on the ground that he is insolvent, or in order to prevent arrangements to the detriment of Government interests, or for any other valid reason.

(*b*) No shop shall be knocked down in the name of more than one person or of more than one company or firm duly represented. The selling officer shall refuse to register as a purchaser any one in whose name the bidding has not proceeded.

3. (*a*) The successful bidder shall, on the exclusive privilege being knocked down to him, at once, if so required by the selling officer, or otherwise at the close of the day's sale, further deposit a sum equal to one-twenty-fourth part of his bid for the year, that is to say, one-half of the monthly rent unless the initial deposit equals or exceeds two months' rent. Should he fail to do so, the deposit, if any, made by him under clause 2 (*a*) will be forfeited, and the privilege will be sold again on the above conditions, or otherwise disposed of at his risk, as the Deputy Commissioner or selling officer may determine.

(*b*) The person to whom a shop or group of shops has been knocked down and who has made deposits as provided above, shall be required to leave his address with the selling officer, in order that the confirmation of the sale may be communicated to that address by a notice, and he shall, within seven days after the service of the

* For Schedule see Supplement to the *Mysore Gazette*, dated 5th April 1906.

said notice by its presentation to himself or to any adult male member of his family at the place of said address or by its being affixed thereto or by its forwardal duly registered by post, pay at the Taluk Treasury concerned, such further sum as, with the former deposits, will make up an aggregate sum equal to two months' rent, and execute at the same time before the Amildar the necessary engagements and take out the necessary licenses, as hereinafter set forth.

4. (*a*) The deposit made under the preceding para shall be either in cash or in Government of India Securities duly endorsed in favor of the Deputy Commissioner. Provided that in cases where the monthly rent exceeds Rs. 10 (in lieu of a deposit of two months' rent as above), the Deputy Commissioner may, in his discretion, allow any purchaser to deposit one month's rent as above, and to furnish approved personal security for an amount equal to four months' rent. In all cases where the monthly rent does not exceed Rs. 10, a cash deposit equal to two months' rent shall invariably be taken, and no personal security shall be accepted. If, on enquiry subsequent to sale, the purchaser shall be found to be a foreigner having no property in the Mysore State, or to be of doubtful solvency, he may be required to deposit twice the prescribed sum or to get a surety or sureties, residents of and possessing property in the Mysore State, to execute a security bond for the due payment of *all moneys* that may become due by him under the terms of the contract.

(*b*) Should the initial deposit exceed the sum required to be deposited under clause 3 (*b*) or clause 4 (*a*), the excess will be refunded to the purchaser.

5. The purchaser shall execute an agreement in the prescribed form, binding himself and, unless exempted by the Deputy Commissioner by an order duly recorded, so much of his movable and immovable property as may be deemed sufficient by the Deputy Commissioner, to observe the conditions hereinafter set forth, as well as those specified in the license to be issued to him; and his surety or sureties, if any have been accepted, shall also execute a bond in the prescribed form binding himself or themselves and so much of his or their movable or immovable property as may be deemed sufficient by the Deputy Commissioner for the due fulfilment by the purchaser of the terms of the agreement. The agreement and the bond so executed shall be stamped at the expense of the purchaser. They shall also be registered at his expense when the amount secured is Rs. 100 and above.

6. If default is made in making the deposit or deposits or in executing the agreement or the security bond, if any, and in taking out licenses as aforesaid, the exclusive privilege shall be forthwith re-sold or otherwise disposed of by the Deputy Commissioner at the risk of the first purchaser, who shall forfeit to the Government any deposit or deposits already made by him, and shall further be liable to make good any loss caused by such re-sale or other disposal. He shall not be entitled to any gain accruing from the re-sale or other disposal, and he shall be debarred from bidding again for the same or for any other shop or group of shops. In the case of loss the forfeited deposits will be deducted from it and the remainder, if any, shall be recovered as if it were an arrear of land revenue. In the case of the purchaser's death after the confirmation of the sale, it will be binding on his heirs or assigns.

7. Re-sales or other disposal effected under para 6 will be at the risk of the defaulting bidder, who shall forfeit all gain; and in the event of a loss caused by re-sale or other disposal he shall make good the deficiency between the total amount payable for the whole period under the terms of the original sale and the total amount payable by the successful bidder at the re-sale or other disposal. In the latter case, the forfeited deposit shall be deducted from the loss arising from the re-sale or other disposal, and the remainder, if any, shall be recovered from the defaulter in the same manner as if it were an arrear of land revenue. Should, however, the forfeited deposit be greater than the loss by re-sale, the whole of such deposit shall be credited to Government.

8. The amount of rental, the consumption of arrack in each shop, etc., for several years past are specified in the appended schedule.

9. The license to be taken out under para 3 (*b*) above, shall be subject to the following conditions but nothing herein contained shall exempt the purchaser of the

privilege from liability to the penalties prescribed for breaches of the conditions set forth below though a formal license may not have been issued:—

(1) The amount for which the privilege has been purchased shall, if it exceeds Rs. 12 per annum, be payable into the local Taluk Treasury in equal monthly instalments commencing from July 1906. But where it does not exceed Rs. 12 per annum, it shall be paid in not more than three equal quarterly instalments. Each instalment shall be regarded as the rent for the month or quarter in respect of which it is payable. The licensee is not required to make any additional payment on account of local cess. Each month's or quarter's rent shall be payable on or before the 20th of the same month, or before the end of the quarter for which the instalment is due. If default is made, the Amildar may, with the sanction of the Deputy Commissioner, suspend, or declare by record in writing that the license is forfeited, and proceed to re-sell or otherwise dispose of the shop or group of shops as soon after the last day of the month or quarter as may be possible with effect from the date of issue of license to the new purchaser or from the date of other disposal. The officer who has power to suspend license may, however, at his discretion, allow sales to continue pending re-sale of other disposal of the privilege.

Note.—The licensee of a Jatra shop shall pay the rent thereof in full before the Jatra begins.

(2) The deposit made by the licensee shall be taken as security for the due performance of the conditions of the license and if not forfeited, credited or otherwise disposed of, shall be credited in payment of the instalments due in the last two months of the period of the lease. Provided, however, that where the shop or group of shops is re-sold or otherwise disposed of, the deposit shall, at the discretion of the Deputy Commissioner, be either forfeited or be appropriated towards the arrears due by the defaulter as well as towards the deficits, if any, arising from the re-sale or other disposal of the shop or group of shops. The balance of such arrears and deficits, if any, shall be recoverable from the licensee under the rules in force for the recovery of arrears of land revenue. No remission or abatement of the rent or compensation shall, on any account whatever, be claimable by the licensee.

(3) Interest at 6 per cent per annum shall be recoverable on all arrears from the date of default, and on deficits from the date of re-sale.

(4) The privilege conferred by the license extends only to the sale of arrack ordinarily of the strength of 20° under-proof and with the special permission of the Deputy Commissioner or other officer authorized by him to the sale of arrack of 30° U. P. In places where there are no shops for the vend of foreign liquors or where the foreign liquor shop-keepers do not undertake to sell double-distilled or rectified country spirits and special liquors such as Brandy, Whisky, Gin, etc., of such strength as may be fixed by the Excise Commissioner, manufactured at the Government Central Distillery, Bangalore, the holder of arrack shop license of approved character may, with the sanction of the Excise Commissioner, be permitted to sell the same in duly corked sealed bottles not to be drunk on the premises, at such prices as may be fixed by the Excise Commissioner, and subject to conditions otherwise applicable to the sale of arrack.

(5) The lease shall not be transferable by sale, gift or otherwise or be sub-rented except with the permission of the Excise Commissioner, nor if the Deputy Commissioner so orders may any agent be appointed for the management of any privilege without his previous approval. All engagements entered into by the agent shall be deposited with the Deputy Commissioner within one month from the date of execution.

(6) Application for resignation of shop or group of shops will be summarily rejected by the Deputy Commissioner.

(7) The manufacturers of arrack or double-distilled or rectified country spirits or other special liquors as well as the licenses of arrack Bonded Depots are prohibited from holding any interest in the retail vend of the abovementioned spirits or from employing any person who has such interest.

(8) The sale or transport of arrack by persons suffering from leprosy or any contagious disease and the employment of such persons in the shop are prohibited.

(9) The license-holder shall purchase from the Bonded Depots established molasses arrack at 8½ annas per gallon of 20° under-proof, jaggory arrack in duly corked sealed bottles at Rs. 1-6-6, and also special liquors referred to above, at such prices as may be fixed by the manufacturers.

(10) The licensee shall sell molasses arrack to the public at Rs. 6-6-0 per gallon of 20° under-proof (*i. e.*, at annas two per dram which is equal to 1—51st part of a gallon) and jaggory arrack at Rs. 1-3-10 per reputed quart bottle and at proportionate rates for lower strengths.

(11) The licensee of every shop in the Cities of Bangalore and Mysore shall pay a registration fee under the Municipal Regulations at the rate of Rs. (180) one hundred and eighty per annum in advance for the period of the license for his shop, and he shall pay a surcharge of (4) four annas per gallon on all arrack sold by him in excess of 55 gallons a month in each such shop.

(12) The above rates to be charged for molasses arrack, jaggory arrack, double distilled or rectified country spirits or other special liquors by the manufacturers and the above fees are in addition to excise duty, which shall be prepaid at the prescribed rate of Rs. 4-12-0 (including local cess) per gallon of 20° U. P. and proportionately for higher or lower strengths, before the removal of the liquor from a Bonded Depot established under the sanction of Government.

(13) The licensee shall pay the above duty and price into a Taluk Treasury or to a special shroff, if any, appointed on this behalf at the cost of Government, and located at the Taluk Cutcherry to receive such duty and price *daily* including Sundays and holidays or to such other officer as may be appointed by the Deputy Commissioner, and shall obtain a receipt in the prescribed printed form. On production of such receipt and an indent for the supply of the liquor covered by the receipt, the Bonded Depot-keeper shall issue the quantity of liquor equal to the amount of duty and price shown in the said receipt which will be forwarded to the Excise Commissioner's office under the endorsement of the Bonded Depot-keeper aforesaid, as to the date and hour when the liquor was issued. The Depot-keeper aforesaid shall issue a pass in the prescribed form for the transport of liquor from the Bonded Depot. He shall also issue sample bottles with the consignments in such manner as may be ordered by the Excise Commissioner.

(14) The licensee shall be bound to take over any liquor which may remain as stock in hand belonging to the out-going licensee on 1st July 1906, in the shop, paying him such compensation for the same as may be fixed by the Excise Commissioner.

(15) The licensee shall possess or use on any licensed premises only such standard measure as may, from time to time, be prescribed by the Excise Commissioner. The officers authorized to inspect licensed shops are empowered to enter and examine the premises, to test the measures in use and the liquor under sale and to call for and check the accounts kept in the shops.

(16) The licensee shall be bound by the provisions of the Excise rules in force and by any additional rules which may, from time to time, be prescribed under the Excise Laws, and if so required, deliver up his license for amendment or issue of a fresh one.

(17) The Deputy Commissioner may, whenever he thinks fit, direct shops to be closed, or permit transfer of shops from one place to another, provided the distance is not more than 200 yards, or direct new shops to be opened with the previous sanction of the Excise Commissioner.

(18) Persons who purchase group of shops may, with the special permission of the Excise Commissioner, who is at liberty to refuse it, and under a license by a competent authority open a depot and remove thereto liquor purchased from the Bonded Depot and issue therefrom the requisite supply to their shops.

(19) The licensee of shop or group of shops shall not, during the term of the license, have any interest in the exclusive privilege of vending toddy or foreign spirits or liquors or both within 5 miles from it, nor permit any person having interest in the exclusive privilege of vending toddy or foreign spirits or liquor or both within the said area, to hold any share or interest in his exclusive privilege of selling country liquor; nor shall he, during the term of his license, without the written permission of the Excise Commissioner, have any interest, direct or indirect, in any arrack farm in any districts of the Madras or Bombay Presidency under the British Government or any other Foreign State or Territory, or Civil and Military Station, Bangalore.

(20) An Inspection note book with the pages numbered consecutively for inspecting officers to enter their remarks shall be maintained and be handed over to the Excise Inspector in charge of the Range or any officer authorized by him to receive it on a receipt being given therefor.

(21) If the licensee shall be convicted on prosecution before a Magistrate of any offence against the Excise Regulation, or Opium Act or other law for the time being in force, which in the Deputy Commissioner's opinion renders him unfit to hold the license, it shall be lawful for the Deputy Commissioner to declare his license forfeited and sell or otherwise dispose of the privilege at the risk of the licensee.

(22) All sums payable by the licensee may be deducted from the amount of his deposit or recovered by attachment and sale of the property of the licensee or his surety, under any law for the time being in force for the recovery of arrears of land revenue.

(23) The license-holder or vendor or vendors shall not sell nor give any arrack exceeding one reputed quart to any individual to convey out of any licensed shop or premises without a valid permit.

(24) The shop-keepers shall not sell or give any arrack to any European non-commissioned officer, private or soldier, or to any European or Eurasian camp follower, or to any member of the families of any of the aforesaid persons, without the permission in writing of the Commanding Officer or of some person duly authorized by him in that behalf; nor to any European sailor, nor to any sepoy, member of the Police force or Excise staff or servant of a Railway Company, whilst on duty; nor to any European vagrant under escort of Police; nor to any child under fourteen years of age; nor to any insane person for consumption on the premises; nor shall they sell any arrack on credit.

(25) They (license-holder or vendor or vendors) shall not receive any articles whatsoever in barter or pledge. Payment for arrack shall be received by them in ready money only, and they shall be bound to give intimation of the offer of anything other than cash to the nearest Magistrate or Police Officer. They shall have no pecuniary dealings with any Excise Officer.

(26) The arrack kept in his shop, offered for sale and sold, shall be unadulterated and undiluted; and it shall be of the same quality and

strength as issued from the Bonded Depot. With all consignments from the Depot to the shop, sample bottles shall be taken in such manner as may be ordered by the Excise Commissioner.

(27) No consignments of arrack received at the shop, and which have been transported through British Territory, shall be opened before they have been verified by the officers authorized to do so.

(28) No water or other beverage, or liquor other than arrack of any quantity whatever shall be kept or sold in the shop in which arrack is sold, or on the person or in possession of the license-holder or vendor or any of his employees in the shop. No ingredients noxious to health shall be added to it either to increase its intoxicating power or for any other purpose. All officers authorized to inspect shops and depots are empowered to detain any liquor found unfit for consumption or use and the Excise Commissioner, all Deputy Commissioners, Deputy Excise Commissioner and Excise Assistant Commissioners are authorized to destroy such liquor.

(29) No robbers or thieves or disorderly or riotous persons or prostitutes or soldiers or others known or believed to be deserters shall be harboured in the shop, and gaming, disorderly conduct, etc., therein shall be prevented, and information of their resort shall be given to the nearest Magistrate or Police Officer. No person shall be harboured during night in any shop.

(30) The license-holder shall fix in a conspicuous place outside of his shop a board on which shall be legibly printed in local vernacular his name and the number of his license and the articles he is licensed to deal in and the current rate of sale; the license must be hung up in a conspicuous place within.

(31) True account of receipts and issues of liquor shall be maintained from day to day in ink in the prescribed form. The accounts and permits shall be in printed books which may be obtained form local Excise Officers on payment of cost price. Permits for liquor received and the counterfoils of permits issued must be carefully filed. The signing of blank permits for subsequent issue is prohibited. The accounts and counterfoils of permits shall be preserved and delivered to the local Excise Officer immediately after the close of the lease. They shall be produced when asked for by the Deputy Commissioner or any officer appointed by him or by an Excise Officer not below the rank of Excise Assistant Inspector. The licensee shall be bound to furnish such returns and information as may, from time to time, be required by the Deputy Commissioner or Excise Officer not below the rank of Excise Assistant Inspector.

(32) The amount of fees payable for the shops under Condition 11 above, shall, in the Towns of Bangalore and Mysore, be paid to the Officers appointed by the President, Municipal Commission, to receive the same.

(33) The following stock or such stock as the Excise Divisional Officer may consider sufficient to meet local requirements shall always remain on hand and not be trenched upon :—

	Arrack	Remarks
I At all District Head-quarters	2 Gallons	
II At all Taluk and Depot Kasabas...	1 Gallon	
III Village shops within five miles from Depot	½ Gallon	
IV Village shops more than five miles distant from Depot...	Stock equal to one day's sale for every ten miles from Depot and not less than the stock fixed for shops within five miles of the Depot.	

The shop shall be kept open during the authorized hours unless its temporary or permanent closure is authorized by the Deputy Commissioner.

(34) The shop shall be closed by *9 P.M., and not be opened before sunrise except on special permit in cases of festivals, etc. The Deputy Commissioner or Assistant Commissioner in charge of the taluk may direct that all shops for the sale of arrack on or adjacent to the line of march shall be closed whilst a detachment of European or Native soldiers is passing or encamped in the vicinity. The Government reserves the power to terminate the lease on public grounds on giving the licensee fifteen days' notice and awarding a reasonable compensation to the licensee. The licensee will have no claim to compensation or remission on account of any arrangements which may be made by Government in regard to Country Beer or other description of liquor than arrack.

(35) The sales should be conducted in a suitable building which shall have only one door, and no windows shall be allowed to the rear or ends of the building. The bar where the liquor is sold shall be opposite the entrance door and so situated that all persons inside can be seen by any one passing to and fro in the street, and no second room shall be allowed to or be kept open for customers.

(36) The right is reserved to the Deputy Commissioner to grant occasional licenses for the sale of liquor on the occurrence of fairs, festivals, etc., in places in the vicinity of which there are no regularly licensed shops. Such licenses shall ordinarily be granted to the shop-keepers who usually supply the locality. Their period shall not exceed fifteen days and the fee to be paid therefor shall be fixed at the Deputy Commissioner's discretion unless he decides to sell the same by public auction.

(37) If it comes to the licensee's knowledge that any person employed by him in the carriage or sale of arrack, commits any breach of the Excise Laws or of the engagements entered into by him, it shall be his duty to report the matter to the Deputy Commissioner, and comply with the directions of the Deputy Commissioner respecting the continued employment of such person.

(38) No person who has been convicted of a heinous offence under the Indian Penal Code shall be employed in the carriage or sale of liquor without the Deputy Commissioner's previous permission.

(39) In case of any breach of the above conditions either by the licensee or, with his connivance and privity, by any person in his employment, or in the event of the licensee neglecting to open his shop, or to carry on the business of his shop with due care and attention, it shall be competent to the Deputy Commissioner to impose upon the licensee a fine not exceeding Rs. 50 for every such breach or for such neglect, or, at the option of the Deputy Commissioner, to declare the money deposited with him forfeited, and to cancel the license and re-sell the shop or to otherwise dispose of it at the risk of the licensee, or to place the shop under the management of Government; and all loss thereby caused, together with all losses accruing to Government in consequence of the licensee's neglect to carry on his business with due care and attention and to open his shop on 1st July 1906, shall be made good by him. When a license is cancelled, the rent for the whole period of the shop shall become due at once. All such amounts of penalties and losses shall be recovered in the same manner as if they were arrears of land revenue.

(40) The imposition of a fine or the forfeiture of deposit or the cancellation of the license under the last preceding para, shall not be held to prevent the prosecution of the licensee or his agents or employees for any offence punishable under the Excise Laws or other law for the time being in force.

NOTE.—For continuing breaches of a license, continuing fines may be imposed.

* 9.30 P.M. in the City of Bangalore.

DATES OF SALE.

District	Taluk	Date
Bangalore.		May 1906
	Bangalore City	1
	Bangalore Taluk	2
	Anekal	4
	Hoskote	8
	Devanhalli	10
	Dodballapur	12
	Nelamangala	14
	Magadi	16
	Channapatna	19
	Kankanhalli	21
Kolar.		May 1906
	Goribidnur	3
	Bagepalli	7
	Chikballapur	9
	Sidlaghatta	11
	Chintamani	15
	Srinivaspur	17
	Mulbagal	19
	Kolar	21
	Malur	23
	*Kolar Gold Fields	25
	Bowringpet	26
Hassan.		May 1906
	Belur	1
	Manjarabad	3
	Arkalgud	7
	Hole-Narsipur	9
	Hassan	11
	Channarayapatna	14
	Arsikere	17
Kadur.		May 1906
	Kadur	19
	Tarikere	21
	†Yedahalli	23
	Koppa	25
	Mudgere	28
	Chikmagalur	31

District	Taluk	Date
Tumkur.		May 1906
	Kunigal	8
	Tumkur	10
	Gubbi	12
	Tiptur	16
	Chiknayakanhalli	19
	Sira	23
	Maddagiri	25
	Pavagada	28
Mysore.		April 1906
	Yedatore	24
	Hunsur	26
	Heggaddevankote	28
	Nanjangud	30
		May
	Gundlupet	2
	Chamrajnagar	4
	Yelandur	7
	T.-Narsipur	9
	Malvalli	11
	Mandya	14
	Seringapatam	16
	Krishnarajpete	18
	Nagamangala	21
	Mysore City and Taluk	23
Shimoga.		May 1906
	Shimoga	4
	Tirthahalli	8
	Nagar	10
	Sagar	12
	Sorab	14
	Shikarpur	16
	Honnali	18
	Channagiri	21
Chitaldrug.		May 1906
	Hosdurga	8
	Holalkere	10
	Davangere	12
	Jagalur	15
	Molakalmuru	17
	Challakere	19
	Hiriyur	22
	Chitaldrug	25

* Gold Fields Magistrate's Court.
Deputy Amildar's Office.

SALE OF DRUG SHOPS FOR 1906-07.

Notice No. 2215, dated 21st March 1906.

1. Notice is hereby given that the exclusive privilege of selling intoxicating drugs in each of the shops specified in the schedule* hereto appended, for the twelve months beginning with 1st July 1906 and ending with 30th June 1907, will be put up to public auction by the respective Deputy Commissioners or by Assistant Commissioners specially authorized by the Deputy Commissioners for the purpose, at the respective taluk or sub-taluk head-quarters, on the dates specified in the annexed statement, subject to the conditions hereinafter set forth.

2. Each bidder at the auction will deposit a sum of Rs. 5, or such other reasonable amount as may be fixed by the officer conducting the sale, previous to bidding, provided that the Government may at any time dispense with such initial deposit. Each shop will be knocked down to the approved highest bidder, subject to formal confirmation by the Deputy Commissioner, who will be at liberty to accept or reject the bid at discretion without assigning reasons for the same. Such formal confirmation will, *unless revised by Government*, be tantamount to an acceptance of the bid. Parties intending to bid must attend either in person or by duly accredited agents. No shop shall be knocked down in the name of more than one person or of more than one company or firm duly represented. The selling officer shall refuse to register as purchaser any one in whose name the bidding has not proceeded.

3. As soon as the auction is completed, the deposits made by the unsuccessful bidders and not forfeited as hereinafter provided, will be returned to them. As the auction proceeds, the person whose bid is accepted for each shop shall at once deposit a sum equal to $\frac{5}{8}$ths of a month's rent for that shop. Should he fail to do so, the deposit made by him under para 2 will be forfeited, the shop will at once be put up again on the above conditions, and he will be debarred from bidding again for the same or for any other shop.

4. The persons to whom the shops have been knocked down, and who have made deposits as provided in paras 2 and 3, shall also be required to leave his address with the sale conducting officer in order that the confirmation of the sale may be communicated to that address by a notice, etc., and he shall, within 7 days, after the service of the said notice by its presentation to the purchaser or any adult male member in the place of the said address or by its being affixed thereto or by its forwardal duly registered by post, pay at the Taluk Treasury concerned such further sum as, with the first and second deposits, will make up an amount equal to two months' rent of each shop knocked down to them; and shall take out licenses and execute a counterpart engagement, in the prescribed forms, on the conditions hereinafter set forth. On the failure of any person to make the deposit or to take out license or to execute the counterpart engagement, as aforesaid, the shop will be re-sold at the risk of such person, or if the auction hereby notified has already been completed, will be otherwise disposed of at the discretion of the Deputy Commissioner. In the case of the purchaser's death after the confirmation of the sale, it will be binding on his heirs or assigns.

5. Re-sales effected under para 4 will be at the risk of the defaulting bidder, who will forfeit all gain; and in the event of a loss by re-sale or other disposal he will make good the deficiency between the total amount payable for the whole period under the terms of the original sale and the total amount payable by the successful bidder at the re-sale or other disposal. In the latter case, the forfeited deposit will be deducted from the loss arising from the re-sale and the remainder, if any, will be recovered from the bidder in the same manner as if it were an arrear of land revenue. Should, however, the forfeited deposit be greater than the loss by re-sale, the whole of such deposit will be credited to Government.

6. The license to be taken out under para 4 above, shall be subject to the following conditions, namely:—

(1) The amount for which the privilege has been purchased shall be payable into the Taluk Treasury on the prescribed challan in equal monthly instalments commencing from July 1906; each instalment shall be regarded as the rent for the month in respect of which it is payable.

* For Schedule see supplement to the *Mysore Gazette*, dated 5th April 1906.

Each month's rent shall be payable on or before the 20th of the same month on the challan prescribed for the purpose. If such amount be less than Rs. 12, it shall be paid up in not more than three quarterly instalments commencing from 1st July 1906. The deposit of two months' rent made by the licensee, will be taken in payment of the rents due for the last two months of the period of the license. Failing payment by the 20th of the same month or before the end of the quarter for which the instalment is due, the Amildar may, with the sanction of the Deputy Commissioner by record in writing, suspend or cancel the license or order the forfeiture of all deposits made by the defaulter and proceed to re-sell or otherwise dispose of the shop at the defaulter's risk (as soon after the last day of the month or quarter as may be possible) with effect from date of issue of license to the new purchaser or from the date of other disposal. No remission or abatement of the rent shall, on any account whatever, be claimable by the licensee.

(2) The licensee shall purchase Ganja and Majum from any Bonded Depot at the rates of Re. 0-13-4 and Re. 0-5-4, respectively, per seer of 80 tolas; and shall pay the price to the Mutsaddi in charge of the Depot.

(3) The rates payable as above, shall be in addition to Excise duty, which shall be prepaid into the Taluk Treasury, or into any other Government Treasury with the permission of the Deputy Commissioner, at Rs. 3-6-8 per seer of Ganja and Re. 0-11-8 per seer of Majum, (including local cess).

(4) The Ganja sold by the licensee, shall be of good quality and unadulterated, and it shall be sold by him at Rs. 10 for a seer of 80 tolas of Ganja or annas 2 per tola of Ganja and of Rs. 1-10-8 for a seer of Majum; and the whole stock of Ganja and Majum on hand shall be kept in the licensed shop and not elsewhere on any pretext whatever, without special permission.

(5) The licensee shall use such scales and weights as may from time to time be prescribed by Government, and provide himself with the printed forms of accounts and permits or passes for transport of Drugs, which forms shall be purchased from local Excise Officers.

(6) The licensee shall be bound to take over any Drugs which may remain as stock in hand belonging to the out-going licensee on the 1st July 1906 in the existing shop, paying to the latter such compensation for the same as may be fixed by the Deputy Commissioner.

(7) The licensee shall be bound by the rules in force, and by such further rules as may be issued from time to time by Government. He shall not during the term of his license, without the written permission of the Excise Commissioner, have any interest direct or indirect in any intoxicating drug shop outside the Mysore State or in the Civil and Military Station.

(8) No female shall be employed in the sale of intoxicating drugs.

(9) The remaining terms and conditions shall be as set forth in the prescribed license.

7. In the case of any breach of the above conditions either by the licensee, or with his connivance and privity, by any person in his employment, or in the event of the licensee neglecting to open his shop or to carry on his business with due care and attention, it shall be competent to the Deputy Commissioner to impose upon the licensee a fine not exceeding Rs. 10 for every such breach or neglect, or at the option of the Deputy Commissioner to declare the money deposited with him forfeited, and to cancel the license and to re-sell or to otherwise dispose of the privilege at the risk of the licensee; and all loss thereby caused, together with the loss accruing to Government in consequence of the licensee not carrying on his business by opening his shop on 1st July 1906, shall be made good by him. When a license is cancelled, the rent for the whole period of the license shall become due at once, which shall be recovered together with all losses as if they were arrears of land revenue.

8. The penalties laid down in the last preceding clause shall not exempt the licensee or his employees from prosecution for any offence committed against the Excise laws or rules in force.

DATES OF SALE.

District	Taluk	Date
		May 1906
Bangalore	Bangalore City and Bangalore Taluk ...	1 & 2
	Anekal	4
	Hoskote	8
	Devanhalli	10
	Dodballapur	12
	Nelamangala	14
	Magadi	16
	Channapatna	19
	Kankanhalli	21
		May 1906
Kolar	Goribidnur	3
	Bagepalli	7
	Chikballapur	9
	Sidlaghatta	11
	Chintamani	15
	Srinivaspur	17
	Mulbagal	19
	Kolar	21
	Malur	23
	Kolar Gold Fields*	25
	Bowringpet	26
		May 1906
Hassan	Belur	1
	Manjarabad	3
	Arkalgud	7
	Hole-Narsipur	9
	Hassan	11
	Channarayapatna...	14
	Arsikere	17
		May 1906
Kadur	Kadur	19
	Tarikere	21
	Yedahalli †	23
	Koppa	25
	Mudgere	28
	Chikmagalur	31

District	Taluk	Date
		May 1906
Tumkur	Kunigal	8
	Tumkur	10
	Gubbi	12
	Tiptur	16
	Chiknayakanhalli	19
	Sira	23
	Maddagiri	25
	Pavagada	28
		April 1906
Mysore	Yedatore	24
	Hunsur	26
	Heggaddevankote...	28
	Nanjangud	30
	Gundlupet	May 2
	Chamrajnagar	4
	Yelandur	7
	T.-Narsipur	9
	Malvalli	11
	Mandya	14
	Seringapatam	16
	Krishnarajpete	18
	Nagamangala	21
	Mysore City and Taluk	23
		May 1906
Shimoga	Shimoga	4
	Tirthahalli	8
	Nagar	10
	Sagar	12
	Sorab	14
	Shikarpur	16
	Honnali	18
	Channagiri	21
		May 1906
Chitaldrug	Hosdurga	8
	Holalkere	10
	Davangere	12
	Jagalur	15
	Molakalmuru	17
	Challakere	19
	Hiriyur	22
	Ch drug	25

* Gold Fields Magistrate's Court.

† Deputy Amildar's Office.

SALE OF COUNTRY BEER TAVERNS IN THE BANGALORE CITY AND IN THE BOWRINGPET TALUK FOR 1906-07.

Notice No. 2216, dated 21st March 1906.

1. Notice is hereby given that the exclusive privilege of selling Country Beer or Porter in each of the taverns specified in the appended schedule,* for the twelve months beginning with 1st July 1906 and ending with 30th June 1907, will be sold by public auction on the dates and at the places mentioned in the annexed schedule by the Deputy Commissioner of the District concerned or other officer authorized by him.

2. The exclusive privilege will be put up to auction at the upset price fixed at Rs. 35 per hogshead of Beer or Porter which will be sold in the taverns at Bowringpet and the Kolar Gold Fields and at the upset price fixed for each of the taverns in the City of Bangalore by the officer conducting the sale with the previous sanction of the Excise Commissioner.

3. The manufacturers of Beer may bid for or purchase the taverns.

4. Each bidder at the auction shall deposit a sum of Rs. 250 for shops in Bowringpet Taluk and Rs. 100 for those in Bangalore or such other reasonable amount as may be fixed by the officer conducting the sale, previous to bidding. Each tavern will be knocked down to the approved highest bidder, subject to the formal confirmation by the Deputy Commissioner, who will be at liberty to accept or reject the bid at discretion, without assigning reasons for the same. Such formal confirmation will, unless revised by Government, be tantamount to an acceptance of the bid. Parties intending to bid must attend either in person or by duly accredited agents.

5. As soon as the auction is completed, the deposits made by the unsuccessful bidders and not forfeited as hereinafter provided, will be returned to them.

6. The persons to whom the taverns have been knocked down, shall be required to leave his address with the sale-conducting officer in order that the confirmation of the sale may be communicated to that address, and within seven days after service by the said notice by its presentation to the purchaser or any adult male member of the family at the place of said address or by its being affixed thereto or by its forwardal duly registered by post, deposit such further sum as, with the first deposit, will make up a total security of Rs. 500 for each tavern knocked down to them or such other reasonable amount as may be fixed by the Deputy Commissioner according to the value of each tavern; and shall take out licenses and execute counterpart engagements, on the conditions hereinafter set forth. On the failure of any person to make the deposit or to take out license or to execute the counterpart engagement, as aforesaid, the tavern will be re-sold at the risk of such person, or if the auction hereby notified, has already been completed, will be otherwise disposed of at the discretion of the Deputy Commissioner. In the case of the purchaser's death after the confirmation of the sale, it will be binding on his heirs or assigns.

7. Re-sales effected under para 6 *supra*, will be at the risk of the defaulting bidder, who shall forfeit all gain; and in the event of a loss by re-sale or other disposal he shall make good the deficiency between the total amount payable for the whole period under the terms of the original sale and the total amount payable by the successful bidder at the re-sale or by disposal otherwise. In the latter case, the forfeited deposit shall be deducted from the loss arising from the re-sale or other disposal, and the remainder, if any, shall be recovered from the bidder in the same manner as if it were an arrear of land revenue. Should, however, the forfeited deposit be greater than the loss by re-sale or other disposal, the whole of such deposit shall be credited to Government.

8. The license to be taken out under para 6 above, shall be subject to the following conditions, namely :—

(1) The privilege conferred by the license extends to the sale of Country Beer or Porter brewed on the Nilgiris in breweries which may be approved of by the Government or by Messrs. Meakin & Co., Kirkee, or by Messrs. Abraham and Gangadhara Chetty & Co., Bangalore, or in any other Brewery approved by Government.

* For Schedule see supplement to the *Mysore Gazette*, dated 5th April 1906.

(2) Each tavern shall be maintained in or close to the existing tavern as described in the schedule hereto appended.

(3) The amount payable for each month on account of the number of hogsheads of Beer or Porter sold, shall be paid into the Taluk Treasury in the first week of the following month, on the challan prescribed for the purpose. The security deposit shall be taken towards the amount due for the last two months of the period of the lease. Failing payment as above, the Deputy Commissioner shall at once proceed to recover the arrears together with interest at 6 per cent, under the rules in force for the collection of land revenue. No remission or abatement of the Government dues shall, on any account whatever, be claimable by the licensee.

(4) The licensee shall further pay a duty of two annas for every gallon of Country Beer or Porter purchased by him, together with local cess at one anna per rupee.

(5) The consignment of Country Beer or Porter purchased by the licensee, shall be sent direct from the Brewery to the Amildar of the Taluk. The letter of advice covering the consignment shall be in duplicate, the original being sent to the Amildar of the Taluk, and the duplicate to the Excise Commissioner. On the duty together with local cess at the abovementioned rate being paid by the licensee on the prescribed challan, the Amildar shall allow the licensee to remove the consignment to his tavern upon a pass signed by the Amildar or other officer authorized on this behalf.

(6) The licensee of every tavern at the Bangalore City shall pay a registration fee under the Municipal Regulation, at the rate of Rs. 180 per annum in advance for the period of the license for his tavern.

(7) The licensee shall use such measures as may from time to time be prescribed by Government, and provide himself with the printed forms of accounts and permits or passes for transport of Beer or Porter, which forms shall be purchased from local Excise Officers.

(8) The licensee shall be bound to take over any Beer or Porter which may remain as stock in hand belonging to the out-going licensee on the 1st July 1905 in the existing tavern, paying to the latter such compensation for the same as may be fixed by the Excise Commissioner.

(9) This lease shall not be transferable by sale, gift, mortgage or otherwise without the previous sanction of the Excise Commissioner

(10) The Vendor shall equally with the license-holder be responsible in the penalties herein set forth for breach of any of the conditions of the license.

(11) He shall sell Beer or Porter of approved quality. It may be sold to be drunk on the premises up to one reputed quart bottle at a time. It may be sold to be removed off the premises upon the prescribed special passes up to one Imperial gallon (4 seers).

(12) He shall not sell or give Beer or Porter in any quantity whatever directly or indirectly to any European or non-commissioned officer or private or soldier, nor to any European or East Indian woman connected with or related to, men of these classes, nor allow him, her, or them, to drink Beer or Porter in his premises or grounds; he shall not permit drunkenness or disorderly behaviour in his shop or premises, and shall not suffer any gambling whatsoever therein, and shall not knowingly permit prostitutes or persons of notoriously bad character to meet or remain therein; he shall not wilfully harbour or conceal therein soldiers or others knowing or having reason to believe such soldiers or others to be deserters; he shall give information of suspicious characters to the Magistrate or Police Officer; and he shall not sell or give Beer or Porter to any Police Officer, Railway servant, or Excise Officer, whilst on duty or to insane person.

(13) He shall fix in a conspicuous place outside of his shop a board on which shall be legibly painted his name, Vendor's name, the number of his shop, and the article he is licensed to deal in.

(14) He shall not receive any articles whatsoever in barter or pledge and payment for Beer or Porter shall be made in ready money only at one and a-half rupee per imperial gallon and proportionately for fractions thereof.

(15) The Beer or Porter sold under this license shall contain 75 per cent of malt or any of the preparations of malt and 3 lbs. of good Kent hops per hogshead, and shall be of the same quality and density as purchased from the Brewer, without dilution or adulteration. The original gravity of the Beer wort shall not exceed 1070 at 60° Fahrenheit. The Beer or Porter sold shall not contain more than 8 per cent alcohol by volume. The licensee will be bound to pay duty, together with local cess, at the prescribed rate per gallon of proof spirit on all alcohol in the Beer or Porter in excess of 8 per cent by volume, besides being liable for prosecution. Samples of such Beer or Porter shall be sent duly bottled from the Brewery or tavern for examination and test whenever required by the Excise Department.

(16) Any Magistrate having local jurisdiction, or any officer acting under his warrant, or any Abkari or Excise officer shall be allowed entry to the shop at any hour to test the Beer or Porter on the premises, and examine the shop accounts, which it shall be the duty of the License-holder and Vendor to keep and produce. Such accounts shall be true and correct, and written up daily in the prescribed forms. All condemned Beer shall be destroyed.

(17) He shall close his shop by 9 P.M., and not open it before sunrise except on special permit in cases of Native festivals, etc.

(18) Beer brought for the Commissariat Department and rejected by the Military or other Departments, shall not, under any circumstances, be forwarded for sale in the tavern.

(19) The shop shall have only one door, and no window be allowed to the rear or ends of the building; the bar where the liquor is sold from, shall be opposite to the entrance door, and so situated that all persons inside can be seen by any one passing to and fro in the street; and no second room shall be allowed to be kept open for customers.

(20) The licensee shall be bound by the rules in force, and which may be issued from time to time by Government.

9. In the case of any breach of the above conditions either by the licensee, or with his connivance and privity by any person in his employment, or in the event of the licensee neglecting to open his tavern or to carry on his business with due care and attention, it shall be competent to the Deputy Commissioner to impose upon the licensee a fine not exceeding Rs. 10 for every such breach or neglect, or at the option of the Deputy Commissioner, to declare the money deposited with him forfeited, and to cancel the license and to re-sell the privilege or to otherwise dispose of it at the risk of the licensee; and all loss thereby caused, together with the loss accruing to Government in consequence of the licensee not carrying on his business by opening his tavern on 1st July 1906 shall be made good by him. When a license is cancelled, the rent for the whole period of the lease shall become due at once, which shall be recovered together with all losses as if they were arrears of land revenue.

10. The penalties laid down in the last preceding clause shall not exempt the licensee or his employees from prosecution for any offence committed against the Excise Laws in force.

BEER SCHEDULE FOR THE YEAR 1906-07.

Name of Taluk	Serial No. of tavern	Situation of the tavern		Names of the present license-holders	Consumption					Rental					License fee payable on each Hogshead of 54 gallons per highest bid				Place of sale	Date of sale	Remarks
			Locality		1901-02.	1902-03.	1903-04.	1904-05.		1901-02.	1902-03.	1903-04.	1904-05.	1905-06.	1902-03.	1903-04.	1904-05.	1905-06.			
1	2	3	4	5	6	7	8	9	10	11	12	13	14	15	16	17	18	19	20	21	22
					Hogs	Hogs	Hogs	Hogs	Hogs	Rs.	Rs.	Rs.	Rs.	Rs.	Rs.	Rs.	Rs.	Rs.			
Bangalore	1	42	Mysore road	Rangaswamy Mudaliar.	49	30	...	...	...						...	...	...	...	Bangalore Taluk Cutcherry	1st and 2nd May 1906	
Do	2	285	Arlepet tank road	Momnadi Pille ...	...	...	..	...	...	1400	2,200	...	...	...	...	...	...	...			
Do	3	2	Avenue road, Yelahanka gate ...	Do	...	...	...	..	...						...	...	...	...			
Bowringpet ...	1	...	Robertsonpet	Punyakoti Mudaliar ...	...	432	445	90	78·32	...	..	...	...	...	47	56	63	61	Gold Fields Magistrate's Court	25th May 1906	
o	2	...	Bowringpet	Do	...	44	24	6	5·22	...	...	...	..	...	43	50½	55	46			

SALE OF TODDY SHOPS FOR 1906-07.

Notification No. 2214, dated 21st March 1906.

1. It is hereby notified that the exclusive privilege of selling toddy in each shop or group of shops specified in the appended Schedule,* for one year, beginning with 1st July 1906 and ending with 30th June 1907, will be put up to public auction at upset prices by the respective Deputy Commissioners or by Revenue Assistant Commissioners or Divisional Officers of the Excise Department or other officers specially authorized by the Deputy Commissioners for the purpose, on the dates mentioned below, and at the respective Taluk or Sub-Taluk Kasabas, and, except as hereinafter provided, will be knocked down to the bidder offering the highest amount of rent above those prices. If the sales are not completed on the abovenamed days, they will be continued on the next following days (close holidays excepted). Should there be no bids for any shops singly, the officer conducting the sale shall be at liberty to revise, when necessary, in consultation with the Excise Divisional Officer, if present, the grouping of shops as specified in the Schedule hereto appended, or, if necessary, to reserve shops for which there may be no bids, for disposal hereafter, or to sell the said privilege in any particular case, by means of tenders or by private negotiation. The privilege in any Coffee Estate may be sold to the planter for a fixed amount not less than Rs. 12 per shop per annum. The shops in alienated villages shall be separately sold, and the amounts connected therewith shall be shown in the accounts under a distinct head. The sale in every case shall be subject to the conditions hereinafter set forth, and shall, *unless revised by the Government*, take effect on formal confirmation by the Deputy Commissioner who shall be at liberty to accept or reject any bid at his discretion without assigning reason for the same. Such formal confirmation will be necessary whether the sale be held by the Deputy Commissioner himself or by any other officer appointed by him. Should there be no bid above the upset price, the officer conducting the sale may lower the upset price at his discretion. The officer conducting the sale may, at his discretion and without assigning any reason, refuse to accept the bid of any person on the ground that he has been convicted by a criminal court of such an offence, or has been guilty of such an infringement of the terms of his license or of a contract under the Excise Regulation or Opium Act as to render him undesirable as a holder of a license, or on the ground that he is insolvent, or in order to prevent arrangements to the detriment of Government interests, or for any other valid reason.

2. (*a*) Parties intending to bid must attend either in person or by duly authorized agents; and no person shall be permitted to bid either on his own behalf or on account of any one else until he has made a deposit of Rs. 25 for shops in the Kolar Gold Fields and the Cities of Bangalore and Mysore and Rs. 10 for shops in other places, or such other reasonable amount as may be fixed by the officer conducting the sale. Provided that the Government may at any time dispense with such initial deposit. Such deposit will, if offered, be received within three days previous to the date of sale. Deposits made by unsuccessful bidders, if not forfeited as hereinafter provided, will be returned at the close of the sale.

(*b*) No shops or group of shops shall be knocked down in the name of more than one person or of more than one company or firm duly represented. The selling officer shall refuse to register as a purchaser any one in whose name the bidding has not proceeded.

3. (*a*) The successful bidder shall, on the exclusive privilege being knocked down to him, at once, if so required by the selling officer, or otherwise at the close of the day's sale, further deposit a sum equal to one-twenty-fourth part of his bid for the year, that is to say, one-half of the monthly rent unless the initial deposit equals or exceeds two months' rent. Should he failed to do so, the deposit, if any, made by him under clause 2 (*a*) will be forfeited, and the privilege will be sold again on the

* For Schedule see Supplemental to the *Mysore Gazette*, dated 5th April 1906.

above conditions, or otherwise disposed of at his risk, as the Deputy Commissioner or selling officer may determine.

(*b*) The person to whom a shop or group of shops has been knocked down and who has made deposits as provided above, shall be required to leave his address with the selling officer, in order that the confirmation of the sale may be communicated to that address by a notice, and he shall, within seven days after the service of the said notice by its presentation to himself or to any adult male member of his family at the place of said address or by its being affixed thereto or by its forwardal duly registered by post, pay at the Taluk Treasury concerned, such further sum as, with the former deposits, will make up an aggregate sum equal to two months' rent, and execute at the same time before the Amildar the necessary engagements and take out the necessary licenses, as hereinafter set forth.

4. (*a*) The deposit made under the preceding para shall be either in cash or in Government of India Securities duly endorsed in favor of the Deputy Commissioner. Provided that in cases where the monthly rent exceeds Rs. 10 (in lieu of a deposit of two months' rent as above), the Deputy Commissioner may, in his discretion, allow any purchaser to deposit one month's rent as above, and to furnish approved personal security for an amount equal to four months' rent. In all cases where the monthly rent does not exceed Rs. 10, a cash deposit equal to two months' rent shall invariably be taken, and no personal security shall be accepted. If, on enquiry subsequent to sale, the purchaser shall be found to be a foreigner having no property in the Mysore State, or to be of doubtful solvency he may be required to deposit twice the prescribed sum or to get a surety or sureties, residents of and possessing property in the Mysore State, to execute a security bond for the due payment of *all moneys* that may become due by him under the terms of the contract.

(*b*) Should the initial deposit exceed the sum required to be deposited under clause 3 (*b*) or clause 4 (*a*), the excess will be refunded to the purchaser.

5. The purchaser of the exclusive privilege shall execute an agreement binding himself and, unless exempted by the Deputy Commissioner by an order duly recorded, so much of his movable and immovable property as may be deemed sufficient, to observe the conditions hereinafter set forth, as well as those specified in the license to be issued to him; and his surety, if any has been accepted under the above para, shall also execute a bond in the prescribed form binding himself and so much of his movable and immovable property as may be deemed sufficient by the Deputy Commissioner, for the due fulfilment by the purchaser of the terms of his agreement. The agreement and bond so executed shall be stamped at the expense of the purchaser. They shall also be registered at his expense when the amount secured is Rs. 100 and above.

6. If default is made in making the deposit or deposits or in executing the agreement or the security bond, if any, and in taking out licenses as aforesaid, the exclusive privilege shall be forthwith re-sold or otherwise disposed of by the Deputy Commissioner at the risk of the first purchaser, who shall forfeit to the Government any deposit or deposits already made by him, and shall further be liable to make good any loss caused by such re-sale or other disposal. He shall not be entitled to any gain accruing from the re-sale or other disposal, and he shall be debarred from bidding again for the same or for any other shop or group of shops. In the case of loss the forfeited deposits will be deducted from it and the remainder, if any, shall be recovered as if it were an arrear of land revenue. In the case of the purchaser's death after the confirmation of the sale, it will be binding on his heirs or assigns.

7. As soon as the agreements and bonds have been executed, the Deputy Commissioner will issue a license in the prescribed form, assigning to the purchaser the exclusive privilege referred to therein, subject to the following conditions; but nothing herein contained shall exempt the purchaser of the privilege from liability to the penalties prescribed for breaches of the conditions set forth below, though a formal license may not have been issued to him:—

(1) The exclusive privilege conferred by the license extends to the sale of Date, Palmyra, Cocoanut, Bagani and Dadasal toddy. But in tracts where both Date and Bagani toddy shops exist, the licensee of the Date Toddy shop shall not tap Bagani trees and the licensee of the

Bagani Toddy shop shall not tap Date trees but both licensees can tap any of the other palm trees named above.

(2) The Deputy Commissioner shall be at liberty to issue license for the sale of foreign liquors, for the manufacture and sale of country beer, and for the manufacture and sale of arrack and other country spirits.

(3) The amount of rent shall be payable into the local Government Treasuries on printed chellans furnished for the purpose by Government, in equal monthly instalments commencing from 1st July 1906. No amount shall be paid to or received by the Excise Officers. In the malnad and semi-malnad taluks, the Deputy Commissioner may permit patels of villages who are not themselves licensees to receive payments not exceeding Rs. 50 from any individual at a time. But if the amount of annual rent for any shop does not exceed Rs. 12, the whole of it shall be paid in not more than three quarterly instalments. Each instalment shall be regarded as the rent for the month or quarter in respect of which it is payable. The licensee will make separate payment on account of local cess. Each month's or quarter's rent shall be payable on or before the 20th of the same month or before the end of the quarter. If default is made, the Amildar may, with the sanction of the Deputy Commissioner, by record in writting, suspend or cancel the license, order the forfeiture of all deposits made by the defaulter and proceed to re-sell or otherwise dispose of the shop or group of shops at the defaulter's risk (as soon after the last day of the month or quarter as may be possible), with effect from date of issue of license to the new purchaser, or from the date of other disposal. Provided, however, that instead of re-selling the same as above the Deputy Commissioner may, in his discretion, direct the Amildar to issue licenses to sub-vendors or vendors under the defaulting licensee for rents, the aggregate of which is not less than the rent the defaulting licensee had agreed to pay. The officer who has power to suspend the license may, however, at his discretion, allow sales to continue pending re-sale or other disposal of the privilege.

NOTE.—The licensee of a Jatra shop shall pay the rent thereof in full before the Jatra begins.

(4) For the supply of toddy to his shops the licensee shall have the privilege of obtaining, subject to tree-tax rules, toddy-yeilding trees in the groves assigned to his shops or groups of shops, and he shall be at liberty to manufacture toddy from the trees in private lands, under private arrangements between himself and the owners of such lands. He may purchase toddy from any licensed toddy shop-keeper on application to the Inspector, who will grant the required permits on proof of the necessity for the same. No toddy except the produce of trees marked by a proper officer and tapped under a license shall be kept in the shop or offered for sale or sold.

(5) For all toddy-yielding trees, tree-tapping licenses shall be annual. For the convenience of the licensee, the applications for tree-tapping licenses will be received, trees will be marked, and licenses will be issued during the fifteen days and pots may be attached to such marked trees during the eight days immediately preceding the period to which they relate to take effect from the commencement of such period. Provided that no toddy shall be removed from the trees except during the currency of such license.

(6) (*a*) Persons applying for the issue of tree-tapping licenses will be responsible to Government for all sums payable as tree-tax on account of the trees licensed therein to be tapped and also for tree-rent in the case of trees on Government unoccupied lands and also for local cess thereon.

(*b*) On receipt of an application, the Inspector will at once take steps for the marking of the tree by an officer superior in rank to a Sub-Inspector, and for the timely issue of the license. Applicants for date trees shall get the requisite spaces on their stems prepared and point

out to the marking officer, when required by the latter to do so, the trees applied for by them. Should they failed to do so, after reasonable notice, the tree-tax and tree-rent paid by them shall be liable to be forfeited at the Deputy Commissioner's discretion.

(7) No tree shall be tapped, nor shall toddy be drawn from any toddy tree, nor shall any pot be attached to any toddy tree until the tree has been marked by the proper officer. But the removal of leaves for the purpose of making incisions and the preparation of the spathes or incisions for the drawing of toddy is permitted as soon as the application in the prescribed form has been delivered to the Treasury concerned.

(8) (1) No tree shall be tapped for toddy without a license therefor to be obtained by payment of tree-tax at the following rates:—

Description of trees.	Rates of tree-tax including local cess per tree per annum.		
	Rs.	a.	p.
Date	1	1	0
Cocoanut	2	2	0
Palmyra	1	9	6
Bagani or sago	1	9	3
Dadasal (Arenga wightii)	0	8	6

NOTE.—The licenses will be free of tax to the Mysore Government in the cases specified in clause 15 (1) (*b*) below.

(2) In addition to the above tax, tree-rent at annas 4 per tree per annum with local cess at 3 pies thereon shall be paid for all Government trees applied for being tapped for the supply of toddy shops whether within or outside the Mysore territories or in the Civil and Military Station of Bangalore.

NOTE —No trees upon Government occupied land can be tapped without the consent of the owner. The present arrangement as regards trees on alienated land will hold good subject, of course, to the levy by Government of tree-tax.

(9) The tree-tax shall be payable in the following instalments, unless the Excise Commissioner shall otherwise direct:—

Period within which license is applied for	Proportion of tree-tax to be paid at the time of application for license	Proportion of tree-tax to be paid on the first of the 3rd month
Between 1st July 1906 and 30th April 1907 ..	One-third ..	The remaining two-thirds.
Between 1st May 1907 and 30th June 1907 ...	The whole ...	.....

(10) (*a*) The tree-rent together with the local cess on tree-rent and also the local cess on the tree-tax for trees applied for shall be payable in full at the time of application for tapping license.

(*b*) If any instalments are not paid within the time, the license shall be liable to be cancelled or suspended under Section 26 of the Excise Regulation.

(*c*) When the licensee makes default and his shop is re-sold, his rights to and claim on Government trees cease and determine.

(*d*) In case of default, the Amildar with the Deputy Commissioner's permission will order the suspension of the tapping license till the arrears are paid up and if, after receiving notice of such suspension, the defaulter continue to tap the trees, he will be prosecuted for illicit tapping.

(11) The deposit made by the licensee will be taken as security for the due performance of the conditions of the license and if not forfeited or credited or otherwise disposed of shall be taken in payment of the instalment due in the last months or month of the period of the license.

All arrears and deficits payable by the licensee shall, with interest at 6 per cent per annum, be recoverable from him or his surety under the rules in force for the recovery of land revenue. Interest shall be calculated on all arrears from the date of default and on deficits from the date of re-sale or disposal otherwise. No remission or abatement of the rent or compensation shall, on any account whatever, be claimable by the licensee, nor will he be entitled to any compensation for any trees withdrawn or taken for the public purpose.

(12) If the Deputy Commissioner does not confim the re-sale, he may make such other arrangements as may appear advisable for the remainder of the period of the lease, in which case he shall serve a notice on the defaulting licensee informing him of the nature of the arrangements made.

(13) If the licensee of a group of shops wishes to establish a depot for depositing toddy required for distribution to his shops, he shall obtain a license for it in the prescribed form. The passes issued with the toddy transported, shall be subject to examination and check by the officers authorized in this behalf.

(14) The tree-tax on toddy produced by trees in the Madras Presidency but consumed in the Mysore State, will be credited to the Mysore Government. The rate of tree-tax to be paid in such cases will invariably be the highest in force on either side of the frontier. Tree-tax on trees in the Madras Presidency for which tapping licenses are about to be taken out by Mysore shop-keepers, must be paid in one instalment to the Amildar of the Taluk concerned in the Mysore State, who will grant a receipt in the prescribed chellan form and certify at the foot that the applicant is a person entitled to take out tree-tapping licenses. The applicant will then make his application to British authorities in accordance with the Madras Government Tree-tapping Rules, and will obtain a transport permit from the Inspector concerned in the Mysore State for the transport of the toddy drawn from the frontier to the shop or depot for which it is intended, after having complied with all requirements of the Madras Government Rules.

(15) (1) Tree-tapping licenses in the prescribed form shall be issued on the application :—

(*a*) of licensed toddy shop-keepers or of their duly authorized agents,

(*b*) of tree-owners in coffee estates, hittals and kans in the malnad free of the prescribed tree-tax for drawing toddy for *bona fide* domestic purposes as per Government Order No. 11897-906—Excise 485, dated 20th June 1898, for such number of trees as may be found necessary by the Excise Commissioner.

(2) The licenses may be issued in the name of the applicant himself or of his nominees.

(16) Applications for the grant of tree-tapping licenses must be made in the prescribed form to the Excise Inspector of the Range concerned through the local Treasury. Forms may be obtained from him or the Assistant Inspectors under him.

(17) Applications for tree-tapping licenses, for trees in occupied or alienated lands should be countersigned by the owner of the trees intended to be marked, in token of his consent. Applications for tree-tapping licenses for trees in State Forests and plantations should be countersigned by the Forest Range Officer in token of his consent.

(18) Deputy Commissioners may, subject to the orders of the Excise Commissioner from time to time, prescribe the minimum number of trees for which license will be granted, and the minimum number to be entered in a single application. They may also direct that the trees situated in one village only shall be included in an application.

(19) Every person to whom a tapping license is granted for the manufacture of toddy shall observe the following rules in tapping date trees: —

(*a*) Date trees shall be tapped only by professional men.

(*b*) Trees tapped one year shall not ordinarily be tapped the next year.

(*c*) Trees shall not be over-tapped or over-worked.

(*d*) In no date trees shall the initial incision be made at any point less than 3 feet from the ground except in places where permission is specially given by the Excise Commissioner.

(*e*) The depth and width of the incision shall not exceed one-third of the diameter of the tree, and the length of it shall not exceed eight inches.

(*f*) Every fresh incision shall not be less than one foot above the last incision except in localities where permission is specially given.

(*g*) The central spike-like clusters shall not be touched. Of the lateral leaves not less than two layers of leaves shall be left, reckoning from the layers immediately next to the central clusters down to the top line of the incision; or in other words, above the top line of the incision not less than eight leaves shall be left excluding the central spike-like clusters, on that face of the tree on which the incision is made.

(*h*) The licensee shall not cut or injure or permit to be cut or injured the trees licensed to him or any other trees.

(*i*) The licensee or his employer will be liable to pay a fine of one rupee for each tree in excess of three per cent of the number of trees marked for him which may die from over-tapping or careless tapping either during the lease or within six months after its expiration.

(20) The licensee shall not interfere with the persons holding license for cutting date leaves for mat-making, rope-making, basket-making, or for agricultural or other purposes, when they make use of the trees assigned for such purposes, and not received for tapping.

(21) The licensee of the depot or shop or group of shops will be required to keep true account of the receipts and issues of toddy from day to day in ink in the prescribed form. The accounts and permits shall be in printed books which may be obtained from the local Excise Officer on payment of cost price. Permits for toddy received and the counterfoils of permits issued must be carefully filed. The signing of blank permits for subsequent issue is prohibited. The accounts and counterfoils of permits shall be preserved and delivered to the local Excise Officer immediately after the close of the lease. They shall be produced when asked for by the Deputy Commissioner or any officer appointed by him or by an Excise Officer not below the rank of an Excise Assistant Inspector. Such returns and information as may be required by the Deputy Commissioner or Excise Officer not below the rank of an Excise Assistant Inspector shall be furnished by holders of licenses without delay.

(22) The sales must be conducted in a suitable building which shall have only one door and no windows or other opening shall be allowed to the rear or at the ends of the building. The bar at which toddy is sold shall be opposite the entrance door and so situated that all persons inside can be seen by any one passing to and fro in the street, and no second room shall be used for the sale of toddy, or be kept open for customers.

(23) Toddy shall not be sold except in shops duly licensed by the Deputy Commissioner, in the prescribed form and no new shops shall be opened without the previous sanction of the Excise Commissioner. Tree-foot sales or sales in the open, or the disposal of toddy in any other manner unauthorized by the rules, are strictly prohibited. Provided, however,

that in Bagani tracts, the licensee who has purchased the right of vend of Bagani toddy, may permit the tapping of Bagani trees for domestic consumption as well as for sale, within the limits of the village purchased by him.

(24) The Deputy Commissioner may, whenever he thinks fit, direct shops to be closed or permit transfers of shops from one place to another within two hundred yards of the sanctioned site. A sufficient supply of toddy shall be maintained in all sanctioned shops, the quantity being such as may be fixed by the Excise Divisional Officer.

(25) The licensee shall place the license granted to him in a conspicuous place in the shops.

(26) The right is reserved to the Deputy Commissioner to grant occasional licenses for the sale of toddy on the occurrence of fairs, festivals, etc., in places in the vicinity of which, there are no regularly licensed shops. Such licenses shall ordinarily be granted to shop-keepers, who usually supply the locality. Their period shall not exceed fifteen days and the fee to be paid therefor shall be fixed at the Duputy Commissioner's discretion unless he decides to sell the same by public auction.

(27) A signboard shall be affixed in a conspicuous part of the front of each shop containing, in the local vernacular, the name of the shop-keeper, number of his license and the rate at which toddy is sold by him. The sale or transport of toddy by persons suffering from leprosy or any contagious disease and the employment of such persons in the shop, are prohibited.

(28) The licensee shall prevent all drunkenness or disorder or gaming within his shops.

(29) No shop shall be opened before sunrise or kept open after 9-30 P. M. in the City of Bangalore except under special authority. The shops shall be kept open during the authorized hours, unless its temporary or permanent closure is authorized by the Deputy Commissioner.

(30) The licensee shall not harbour robbers or thieves or disorderly or riotous persons or prostitutes or soldiers or others known or believed to be deserters. No persons shall be harboured in any shop during the night, but, on the contrary, the licensee shall give intimation to the nearest Magistrate or Police Officer as to any such persons who may resort to his shops.

(31) The licensee shall not receive any grain, jewels, goods, wearing apparel, or other article in barter or in pawn for toddy, but on the offer of any such, shall give information to the nearest Magistrate or Police Officer.

(32) The licensee, vendor, or vendors shall not sell to any person more than three measuring seers of toddy to be consumed by the person at one time in the shop. He shall not allow any one to take out of his shop without a pass more than two seers or imperial quarts with the exception of bakers who are permitted to purchase and remove the quantity of toddy specified in the pass held by them. Toddy can be removed upon passes for consumption up to the limit of one imperial gallon or four seers.

(33) The distillation of spirit from toddy is absolutely prohibited.

(34) Toddy shall be sold pure as drawn from trees, and shall not be adulterated or diluted in any manner in the shops, or depots if any. No ingredient noxious to health shall be put into the toddy either to increase its intoxicating power or for any other purpose. All officers authorized to inspect shops and depots are authorized to detain any liquor found unfit for consumption or use and Excise Commissioner, all Deputy Commissioners and Deputy Excise Commissioner and Excise Assistant Commissioners are empowered to destroy such liquor.

(35) Toddy shall not be sold to the public at less than the retail rates fixed by Government as per schedule attached.

(36) The licensee shall possess or use on any licensed premises only such standard measures of capacity as may, from time to time, be prescribed by the Excise Commissioner. The officers authorized to inspect licensed

shops, are empowered to enter and examine the premises to test measures in use and the toddy under sale and to call for and check accounts in the shop.

(37) The licensee shall have such measures tested and stamped to his own expense.

(38) No toddy shall be sold or given to any European non-commissioned officer, private or solder, or to any European or Eurasian camp follower, or to any member of the families of any of the aforesaid persons, without the permission, in writing, of the Commanding Officer, or of some person duly authorized by him in this behalf; nor to any European or Eurasian sailor, nor to any sepoy, member of the Police force, Excise officer, or a servant of a Railway Company whilst on duty; nor to any European vagrant under escort of the Police; nor to any child under fourteen years of age, nor to any insane person for consumption on the premises; nor shall any toddy be sold *on credit.*

(39) The Deputy Commissioner or Assistant Commissioner in charge of the Taluk may direct that all shops for the sale of toddy on, or adjacent to, the line of march shall be closed whilst a regiment or detachment of European or Native soldiers is passing or encamped in the vicinity. Such soldiers may be supplied with toddy by such persons as the Government may select for the purpose, notwithstanding the licensee's exclusive privilege.

(40) The Government reserves the power to terminate the lease on public grounds, on giving the licensee fifteen days' notice and awarding a reasonable compensation to the licensee. The licensee will have no claim to compensation or remission on account of any arrangements which may be made by Government in regard to country beer or other description of liquor than toddy.

(41) The license shall not be transferable by sale, gift or otherwise or be sub-rented except with the permission of the Excise Commissioner. Applications for the resignation of shops in whole or in part will be summarily rejected by the Deputy Commissioner.

(42) No person shall be appointed by the licensee for the management of any such privilege without the Deputy Commissioner's previous approval.

(43) All engagements entered into by agent, shall be deposited with the Deputy Commissioner within one month from the date of execution.

(44) If it comes to the licensee's knowledge that any person employed by him in the manufacture, carriage or sale of toddy commits any breach of the Excise Law or of the engagements entered into by him, it shall be the licensee's duty to report the matter to the Deputy Commissioner, and to comply with the directions of the Deputy Commissioner respecting the further employment of such person.

(45) The licensee of shop or group of shops shall not, during the term of the license, have any interest in the exclusive privilege of vending arrack within five miles from it nor permit any person having interest in the exclusive privilege of vending arrack within the said area of five miles to hold any share or interest in his exclusive privilege of selling toddy; nor shall he, during the term of his license, without the written permission of the Excise Commissioner, have any interest, direct or indirect, in any toddy shop or farm outside the territories of Mysore, or in the Civil and Military Station of Bangalore.

(46) The licensee shall provide himself with printed forms of permits for transport and possession of toddy. Such permits shall be in the form prescribed by the Excise Commissioner, and shall be purchased from local Excise officers. He shall have no other pecuniary dealings with any Excise officer.

(47) The licensee shall pay the usual mohatarfa tax on carts used for conveying toddy but such carts shall not be impressed for Government work.

(48) In case of any breach of the aforesaid Rules or of the conditions of the license either by the licensee or with his connivance or privity by any person in his employment, or in case of the licensee neglecting to open his shops on 1st July 1906, or to carry on his business with due care and attention, it shall be competent to the Deputy Commissioner to impose upon the licensee a fine not exceeding the sum of Rs. 50 for every such breach or neglect, or at the option of the Deputy Commissioner to declare the money deposited with him forfeited, and to cancel the license, and to re-sell the exclusive privilege or otherwise dispose of it at the risk of the licensee, or to place it under the management of Government. When a license is cancelled, the rent for the whole period of the license shall become due at once; and all loss caused to Government by the cancelment of the license or by the re-sale or other disposal of the privilege shall be made good by the licensee, or his surety in the manner specified in condition 53. All sums due shall be recovered in the same manner as if they were arrears of land revenue.

(49) An Inspection note-book with the pages numbered consecutively for inspecting officers to enter their remarks, shall be maintained and be handed over to the Excise Inspector in charge of the Range or any officer authorized by him to receive it on a receipt being given therefor.

(50) The imposition of a fine, or the forfeiture of a deposit, or the cancellation of the license under the last preceding condition, shall not be held to prevent the prosecution of the licensee or his agents or employees for any offence punishable under the law for the time being in force.

NOTE.—For continuing breaches of a license, continuing fines may be imposed.

(51) No person who has been convicted of any heinous offence under the Indian Penal Code shall be employed in the carriage or sale of liquor without the Deputy Commissioner's previous permission.

(52) If the licensee shall be convicted on prosecution before a Magistrate of any offence against the Excise Regulation or Opium Act or other law for the time being in force, which, in the Deputy Commissioner's opinion, renders him unfit to hold the license, it shall be lawful for the Deputy Commissioner to declare his license forfeited or sell or otherwise dispose of the privilege at the risk of the licensee.

(53) All sums payable by the licensee may be deducted from the amount of his deposit, or recovered by attachment and sale of the property of the licensee or his surety, under any law for the time being in force for the recovery of arrears of land revenue.

(54) The licensee shall be bound by the provisions of the Excise Laws and Rules thereunder for the time being in force and by the terms and conditions of the license. The licensee shall, on requisition by the Deputy Commissioner or other officer duly authorized by him, deliver up his license for amendment or for the issue of a fresh license accordingly.

(55) In every grove where toddy-yielding trees are tapped, a ladder shall always be kept by the tap-men to enable Excise officers to examine incisions or spathes, as the case may be, or to measure the incisions.

DATES OF SALE.

District	Taluk	Date
		May 1906
Bangalore	Bangalore City	1
	Bangalore Taluk	2
	Anekal	4
	Hoskote	8
	Devanhalli	10
	Hodballapur	12
	Nelamangala	14
	Magadi	16
	Channapatna	19
	Kankanhalli	21
		May 1906
Kolar	Goribidnur	3
	Bagepalli	7
	Chikballapur	9
	Sidlaghatta	11
	Chintamani	15
	Srinivaspur	17
	Mulbagal	19
	Kolar	21
	Malur	23
	* Kolar Gold Fields	25
	Bowringpet	26
		May 1906
Hassan	Belur	1
	Manjarabad	3
	Arkalgud	7
	Hole-Narsipur	9
	Hassan	11
	Channarayapatna	14
	Arsikere	17
		May 1906
Kadur	Kadur	19
	Tarikere	21
	† Yedahalli	23
	Koppa	25
	Mudgere	28
	Chikmagalur	31

District	Taluk	Date
		May 1906
Tumkur	Kunigal	8
	Tumkur	10
	Gubbi	12
	Tiptur	16
	Chiknayakanhalli	19
	Sira	23
	Maddagiri	25
	Pavagada	28
		Apl. 1906
Mysore	Yedatore	24
	Hunsur	26
	Heggaddevankote	28
	Nanjangud	30
		May
	Gundlupet	2
	Chamrajnagar	4
	Yelandur	7
	T.-Narsipur	9
	Malvalli	11
	Mandya	14
	Seringapatam	16
	Krishnarajpete	18
	Nagamangala	21
	Mysore City and Taluk	23
		May 1906
Shimoga	Shimoga	4
	Tirthahalli	8
	Nagar	10
	Sagar	12
	Sorab	14
	Shikarpur	16
	Honnali	18
	Channagiri	21
		May 1906
Chitaldrug	Hosdurga	8
	Holalkere	10
	Davangere	12
	Jagalur	15
	Molakalmuru	17
	Challakere	19
	Hiriyur	22
	Chitaldrug	25

* Gold Fields Magistrate's Court. † Deputy Amildar's Office.

P. N. PURNAIYA,
Excise Commissioner in Mysore.

FOREST DEPARTMENT.

Dated 2nd April 1906.

Under the authority of Government Proceedings No. R. 7581-90—Ft. 15-02-13, dated Bangalore, 20th December 1905, the following statement showing the ways allowed to the public and particulars of water supplies, etc., available in the undermentioned State Forests of the Tumkur District, is published for the information of the public:—

HULIYURDURGA FOREST.

KUNIGAL TALUK.

Huliyurdurga Block.

1. Cart-track from Huliyurdurga to Kalammanagudi, twenty yards wide and one mile and five furlongs long, open to all traffic. It enters the Huliyurdurga Forest Block at cairn No. 33 and passes through the forest for a distance of one mile and three furlongs and leaves the forest between cairns Nos. 71 and 72 near the Devambudi tank.

2. Foot-path from Huliyurdurga to Jodi Vaddarpalli, four feet wide and five furlongs and 130 yards long, open to men and cattle. It enters the reserve between cairns Nos. 17 and 18 and leaves it near cairn No. 88, passing through the forest in an easterly direction.

3. Foot-path from Huliyurdurga to Hittalpura, four feet wide and ten furlongs long, open to men and cattle. It enters the Huliyurdurga reserve between cairns Nos. 13 and 14 and meets Ujjani Block line at cairn No. 96, finally leaving the Ujjani Block between Nos. 130 and 131 passing through the forest in a south-easterly direction.

Ujjani Block.

1. Foot-path from Jodi Vaddarpalli to Hittalpura, four feet wide and five furlongs and 150 yards long, open to men and cattle. It enters the forest near cairn No. 7 and leaves between cairns Nos. 122 and 123, passing through the forest in a southerly direction.

2. Foot-path from Benachikal to Ujjani village, four feet wide and eight furlongs long, open to men and cattle. It enters the forest at cairn No. 14 and leaves the same between cairns Nos. 115 and 116, passing through the forest in a southerly direction.

3. Foot-path from Benachikal to Kenchanahalli, four feet wide and six furlongs long, open to men and cattle. It enters the forest between cairns Nos. 23 and 24 and then finally leaves the same between cairns Nos. 45 and 46, passing through the forest in an easterly direction.

4. Foot-path from Kenchanahalli to Kadeboranahalli, four feet wide and four furlongs long, open to men and cattle. It enters the reserve between cairns Nos. 49 and 50 and then passes to Survey No. 64 of Kadeboranahalli, passing through the forest in a south-westerly direction.

5 Foot-path from Handalkere to Ujjani *via* Kadeboranahalli, six feet wide and two miles and five furlongs long, open to men and cattle. It enters the forest between cairns Nos. 55 and 56, and quits it between cairns Nos. 111 and 112 crossing Kadeboranahalli situated within the reserve, passing through the forest in a south-westerly direction.

6. Foot-path from Tavarekere to Kachihalli, four feet wide and one mile long, open to men and cattle. It enters at cairn No. 64 and leaves the reserve between cairns Nos. 81 and 82, passing through the forest in a southerly direction.

7. Foot-path from Kadeboranahalli to Benachikal, about six furlongs long and four feet wide. It enters the forest between cairns Nos. 5 and 6, passes through the forest in a north-westerly direction and quits it between cairns Nos. 19 and 20.

Ippadi Block.

1. Cart-track from Ippadi to Harohalli, six feet wide and four furlongs long, open to all traffic. It enters the forest at cairn No. 2 and leaves the same between cairns Nos. 78 and 79, passing through the forest in a south-easterly direction.

2. Foot-path from Hutridurga to Harohalli, four feet wide and three furlongs and 105 yards long, open to men and cattle. It enters the reserve between cairns Nos. 22 and 23 and leaves the same between cairns Nos. 72 and 73, passing through the forest in a southerly direction.

3. Cart-track from Hulikatte to Neelasandra, eighteen feet wide and one mile and 100 yards long open to all traffic. It enters the block at cairn No. 42 and leaves between cairns Nos. 68 and 69, passing through the forest in a westerly and south-westerly direction.

4. Cart-track from Bayadarahalli to Magadi high road, sixteen feet wide and four furlongs long open to all traffic. It enters the block between cairns Nos. 53 and 54 and then finally leaves the reserve at 7—39th mile stone, passing through the forest in a northerly and easterly direction.

5. Cart-track from Gadde Tippasandra to Ippadi, four furlongs long, enters the forest near cairns Nos. 119 and 120 and leaves the forest near cairn No. 122, passing through the forest in a northern direction.

Under the authority of Government Proceedings No. R. 7581-90—Ft. 15-02-13, dated Bangalore, 20th December 1905, the following statement showing the ways allowed to the public and particulars of water supplies, etc., available in the undermentioned State Forests of the Tumkur District, is published for the information of the public :—

TIRTHARAMPURA FOREST.

CHIKNAYAKANHALLI TALUK.

1. Foot-path leading from Godekere to Tirthapura, called Aravattige Alladamaradadari, about two yards wide and two miles long. It enters the State Forest at 3rd mile, 7th furlong of the demarcation line and at south-east corner of Survey No. 12 of Manchikatte, runs north-east through Survey Nos. 41 and 42 of Sandenahalli and 34 of Yerrekatte villages, and leaves the demarcation line at fifteenth mile and fourth furlong at the south-west corner of Survey No. 35 of Yerrekatte. It is open to both people and cattle.

2. Foot-path leading from Bullanahalli to Dodrampura and Tirthapura, about two yards wide and half a mile long. It enters the State Forest at the fourth mile about 100 yards south-west of north-east corner of Survey No. 7 of Bullanahalli and proceeds in the north-eastern direction through Survey Nos. 42 of Sandenahalli and 34 of Yerrekatte villages, and joins the Godekere-Tirthapura path after passing in the last named survey number about 100 yards. It is open to both people and cattle.

3. Cart-track leading from the 65th mile stone on Bangalore-Shimoga road to Tirthapura about five yards wide and three miles long. It enters the State Forest at the twenty-fourth mile and sixth furlong at the point where Survey Nos. 20 and 21 of Bommarasanahalli meet, passing through the Survey No. 25 of Bhogasandra and also through Survey Nos. 14, 16 and 7 of Karadikallu villages in a north-western direction and 136 of Kondli, in which it changes its direction to the north after passing about 150 yards, and leaves the demarcation line at the nineteenth mile, third furlong, about two furlongs from the south-east corner of Survey No. 136 of Kondli to the north-west of it or about two furlongs from south-west corner of survey number 1 of Oblapura.

4. Cart-track leading from Kondli and Mavinhalli to Dodrampura, about five yards wide and one and a quarter miles long. It enters the State Forest about twenty-five yards from the south-east corner of Survey No. 22 of Mavinahalli, and passing through the same survey number in a northern direction, leaves the demarcation line at sixteenth mile, 7th furlong, about 100 yards from the north-east corner of the abovementioned survey number to the west of it.

5. Foot-path leading from Kondli to Maganayakanakote called Sulekalve foot-path, about two yards wide and two miles long. It enters the State Forest at thirtieth mile, sixth furlong, at a point about three furlongs from the south-east corner of Survey No. 8 of Mudlupalya to the north of it, passing through Survey Nos. 15 and 16 of Karadikallu, going exactly to the east and then to the north-east, and crosses cart-track No. 3, whence it changes its direction to the east, passing through Survey Nos. 14 of Karadikallu and 25 of Bhogasanda, leaves the demarcation line at twenty-third mile, fourth furlong, near the north-west corner of Survey No. 18 of Bhogasandra. It is open to both people and cattle.

6. Foot-path leading from Kondli to Oblapura, about two yards wide, one mile long. It enters the State Forest at thirty second mile, fifth furlong, about fifteen yards from the south-east corner of Survey No. 61 of Kondli to the west of it, passing through Survey No. 136 of Kondli in a northern direction, and leaves the demarcation line at eighteenth mile, fourth furlong, about two furlongs from the south-east corner of Survey No. 41 of Chikrampura to the south-east of it.

7. Foot-path leading from Chiknayakanhalli to Madanmadu called Thikanakanavedari, about two yards wide and one and a quarter miles long. It enters the State Forest at seventh mile, third furlong, about fifteen yards from the north-east corner of Survey No. 11 of Gollanahalli, proceeds in the eastern direction for about three-fourths of a mile along Survey No. 9 of Homblikatte, and then it changes its direction to the north-east and leaves the demarcation line at twelfth mile, fourth-furlong, at about eighty yards from the north-east corner of Survey No. 9 of Homblikatte to the south of it. It is open to both people and cattle.

8. Foot-path leading from Kondli to Adalgere about two yards wide and half a mile long. It enters the State Forest at twenty-seventh mile, sixth furlong, about half a mile

from the north-east corner of Survey No. 37 of Sivasandra to the south of it, passing directly to the east in Survey No. 42 of Virupakshipura, and leaves the line at the twenty-sixth mile, fourth furlong, about three furlongs from the north-east corner of the above said survey number to the south of it. It is open to both people and cattle.

9. Waterway to Kemparayanavajra situated in Survey No. 36 of Ganehal village, about two furlongs in length, is allowed for the use of the people and the cattle of Ganehal village.

10. A way twelve yards wide hedged on either side from a bandh twenty yards from the fourth furlong stone of the eighteenth mile of the demarcation line on the boundary of Survey No. 35 of Gudda-Oblapura for a distance of 1,120 yards to Pikkalhalla, for water for the use of the cattle belonging to the Gudda-Oblapura and Gollarhatti of Hagalvadi Hobli, Gubbi Taluk. This concession is allowed subject to be withdrawn if any of the terms laid down in a mutchalika dated 5th February 1899, executed on a stamped paper by the villagers, are violated.

MANCHALDORE FOREST.

GUBBI TALUK.

1. Foot-path leading from Manchaldore to Hagalvadi and other places, about two yards wide and two and a half miles long. It enters the State Forest at twenty-second mile, fifth furlong, passing directly to the west through Survey Nos. 79, 80 and 81 of Manchaldore and 36 of Karihalli, leaves the demarcation line near the nineth mile. It is open to both people and cattle.

2. Foot-path leading from Guddenhalli to Machanahalli, two yards wide and one and three-fourth miles long. It enters the State Forest at tenth mile, seventh furlong, passing through Survey Nos. 38, 20 and 21 of Karihalli and 24 of Machanahalli, towards the east, leaves the demarcation line at twentieth mile, third furlong, at the north-east corner of Survey No. 20 of Machanahalli. It is open to people and cattle.

3. Foot-path leading from Hagalvadi to Huvvinkatte, two yards wide and one and one-fourth miles long. It enters the State Forest at nineth mile, fourth furlong, about two furlongs south of the north-west corner of Survey No. 105 of Huvvinkatte, passing east through Survey Nos. 105 and 106 of Huvvinkatte leaves the demarcation line at second mile, second furlong, about two furlongs south of the north-east corner of Survey No. 106 of Huvvinkatte. It is open to both people and cattle.

4. Cart-track leading from Karimadenahalli to Kuntaramanahalli, five yards wide, two and a half miles long. It enters the State Forest at the sixteenth mile, passing directly towards south through Survey Nos. 68 of Haralukatte and 45 and 44 of Kalinganahalli, leaves the demarcation line at eighteenth mile, third furlong. It is open to carts, people and cattle.

5. Cart-track leading from Shivarampur to Kuntaramanahalli, five yards wide, two and a half miles long. It enters the State Forest at the fourteenth mile, third furlong, about one furlong south-west of the north-west corner of Survey No. 68 of Haralukatte, passing through the same survey number for nearly half a mile, and then it leaves the demarcation line at fourteenth mile, second furlong, about two furlongs south of the north-east corner of the above named survey number, and again enters the State Forest at fifteenth mile, seventh furlong, passes through Survey Nos. 68 and 81 of Haralukatte and Survey Nos. 45 and 44 of Kalinganahalli and Survey No. 24 of Muchalanahalli all along in a south-easterly direction, and leaves the forest at the twentieth mile, fourth furlong. It is open to carts, people and cattle.

6. Foot-path from Shivarampura for the use of both people and cattle is allowed to the raiyats of Gundlukunte land, which is about two yards wide and three-fourth mile long from fourteenth mile, first furlong, to Gudlukunte through Survey No. 68 of Haralkatte.

Under the authority of Government Proceedings No. R. 7581-90—Ft. 15-02-13, dated Bangalore, 20th December 1905, the following statement showing the ways allowed to the public and particulars of water-supplies, etc., available in the undermentioned State Forest of the Tumkur District, is published for the information of the public :—

BUKKAPATNA FOREST.

1. Huliyar-Bukkapatna high road, six yards wide and three and one-fourth miles long, open for carts, people and cattle. It enters the State Forest at forty-third mile, second furlong, and leaves the forest at forty-sixth mile, fourth furlong.

2. Hagalvadi-Ramanahalli foot-path, six feet wide and three miles long, open for people, pack animals and cattle. It enters the State Forest near the north-east corner of Survey No. 4

of Siddapur, and passing through Survey Nos. 3, 1, 54, 55, 51, 57, 60 and 61 of Siddapur-Balekonu and Survey No. 40 of Ramanahalli, leaves the State Forest in Survey No. 40 of the last named village at a point about three furlongs north from the middle bandhs of the southern boundary of the same survery number.

3. Hagalvadi-Timmanahalu foot-path, four feet wide and about four miles long, open for people and cattle. It enters the State Forest in Survey No. 17 of Siddapur at a place about hundred yards from the north-east corner, and runs in a westerly direction through Survey Nos. 3, 2, 1, 54, 53, 45 and 27 of the last named village and Survey No. 19 of Ghantenahalli, and leave the State Forest at the south-east corner of Survey No. 88 of Timmanahalli.

4. Jankal-Badape Gudlu foot-path, four feet wide and about two and a half miles long, open for people and cattle. It enters the State Forest in Survey No. 14 of Basavanahalli about hundred yards from the south-west corner of the same survey number, and runs in a westerly direction through Survey Nos. 17 of Basavanhalli and 24 of Mailkebbe, and leaves the State Forest about seventy-five yards south of the boundary bandhs of Survey Nos. 14 and 15 of Hullenahalli and Survey Nos. 24 and 12 of Mailkebbe.

5. Jankal-Timmanahalli foot-path, four feet wide and about six miles long, open for people and cattle. It enters the State Forest in Survey No. 16 of Basavanahalli, runs in a south-westerly direction, passing through Survey Nos. 16 of Basavanahalli, 51, 50, and 48 of Siddapur, 27, 26, 25, 24, and 19 of Ghantenahalli, and leaves the State Forest in Survey No. 88 of Timmanahalli.

6. Cart-track from Jankal to Huliyar-Bukkapatna road, six yards wide and about three miles long, open for carts and people. It enters the State Forest in Survey No. 32 of Jankal about a furlong south from the boundary bandhs of Jankal and Budigudda kaval and runs in a north-westerly direction through Survey Nos. 18, 20 and 21 of Budigudda until it meets No. 1 high road.

7. Pura-Dabgunte cart-track, six yards wide and about four miles long, open for carts and people. It enters the State Forest in Survey No. 62 of Pura at the boundary bandhs of Survey No. 62 of Tippanahalli and runs in a westerly direction through Tippanahalli and Survey Nos. 4, 3, 2, 1 of Maridasanahalli and 40 of Marenadu, and leaves the State Forest in Survey No. 40 of Marenadu at a place about two furlongs from the south-west corner of the same survey number.

8. Hunsekatte-Marenadu foot-path, four feet wide and four miles long, open for cattle and people. It enters the State Forest near Venkatapur in Survey No. 133 of Yerradakatte, and runs in a westerly direction through Survey Nos. 1 and 2 of Venkatapura and Survey No. 2 of Kambada and Survey Nos. 1 of Suladahal and 1 of Maridasanahalli and 40 of Marenadu, and leaves it in Survey No. 40 of Marenadu.

9. Yerradakatte-Marenadu foot-path, four feet wide and about three miles long, open for people only. It enters the State Forest in Survey No. 143 of Yerradakatte, and runs in a westerly direction through Survey Nos. 140 and 139 of Yerradakatte and Survey Nos. 2 and 1 of Boranhal until it meets foot-path No. 10.

10. Ajjanahalli-Marenadu foot-path, four feet wide and about seven miles long, open for people and cattle. It enters the State Forest in Survey No. 55 of Ajjenahalli, and runs in a south-westerly direction, passing through Survey No. 9 of last-named village and Survey Nos. 12, 13, 14 and 19 of Gargarpente and Survey No. 1 of Boranahal, No. 2 of Suladahal, joins foot-path No. 8 at the boundary bandhs of Suladahal, Maridasanahalli and Marenadu.

The following privileges were recognized at settlement subject to regulation and restriction by the Deputy Commissioner of the District and withdrawal in case of abuse :—

1. A way twelve yards wide for cattle only from Nerlagudda to the stream of Bellarahalla *via* Bornahal for a distance of two miles, two furlongs and eighty yards.

2. A way twelve yards wide for cattle only from Yerradakatte to the stream of Bellarahalla for a distance of about one mile, one furlong and 160 yards.

3. A way twelve yards in width for cattle only from Ajjenahalli to the stream of Bellarahalla for a distance of one mile and forty yards.

4. The raiyats of Kumbarahalli, Hunusekatte and Pura villages are allowed to take their cattle for water by the demarcation line to Chikkathore.

5. A way to the undermentioned shrines will be admitted as follows for the use of worshippers and others :—

Name of shrine	Situation	Access to the shrine
Timmappanagudi	Situated on the top of Timmappanagudda.	By a foot-path branching from path No. 5 near the boundaries of Basavanahalli and Mailkebbe and runs for about two furlongs up to the shrine.
Suladahalli Ramappanagudi.	Situated in the deserted village of Suladahal in the midst of the forest.	By a foot-path branching from path No. 9 near Boranhal running for about two furlongs up to the shrine.

Notification, dated 15th April 1906.

It is hereby notified for general information that the following Minor Forest Products collected departmentally in the State Forests of this District will be sold by public auction by the District Forest Officer or any officer deputed by him, at the places and on the dates noted below :—

Articles	Quantity more or less	Date of sale	Place where sale is to be held	Remarks
Gall-nut ...	1,200 maunds ...	30th April 1906 ...	Gubbi ...	More quantity than this and any other articles that may be collected subsequent to the issue of this notification will also be sold on the dates referred to.
Gall-nut ...	1,000 maunds ...	1st May 1906 ...	Tumkur	
Tamarind ...	173 maunds ...			
Soap-nut ...	6 maunds ...			
Kapilarangu ...	14 lbs. ...			

Terms.—Twenty-five per cent of the purchase money to be deposited at once and the balance paid within seven days from the date of confirmation of sale; in default, the articles will be resold at the risk of the original purchaser.

2. Watch and ward rest with the purchaser from the date of payment.

3. The articles should be removed out of the depot premises within seven days from the date of payment in full.

H. RAMIAH,
Dist. Forest Officer, Tumkur Dt.

Dated 1st April 1906.

It is hereby notified for public information that sawn scantlings of teak and honne are available for sale in the following depots of the Kadur District :—

Name of depot	Description of scantlings	Approximate quantity	Rate per cubic foot	Remarks
Tarikere	Teak rafters ...	C. ft. 6,000	2 4 0	Selected.
	Others ...	2,000	1 12 0	
	Teak reepers ...	R. ft. 10,000	25 0 0 per 1,000 R. ft.	
Kadur	Honne rafters ...	800	1 8 0	

B. HEERASINGH,
Dist. Forest Officer, Kadur Dt.

POLICE DEPARTMENT.

List of property seized by the Police on 1st March 1906 during a search instituted on suspicion in the house of Sivachar Nanjiah, a resident of Dugahalli village of Yelandur Taluk.

		Rs.	a.	p.
1.	Eight good pearls which had been sold to one patel Putta Basavappa for Rs. 7	15	0	0
2.	One big copper vessel (ಹಂಡೆ) weighing about a maund	15	0	0
3.	One copper vessel (ಹಂಡೆ) somewhat new, weighing 35 seers	12	0	0
4.	One brass kolaga thapali with brass rings, weighing 30 seers	12	0	0
5.	Two small brass kolaga thapales tinkered inside and weighing 25 seers ..	8	0	0
6.	One small coppy vessel (ಹಂಡೆ) weighing about 15 seers ...	6	0	0.
	Property found on opening a big box which was locked and kept in a room. (*In cases.*)			
7.	One pair of chendramuru (ಚಂದ್ರಮುರಿ) studded with red and white stones and stringled with ordinary pearls	20	0	0
8.	One pair do do do ...	15	0	0
9.	One gold nagaru (ನಾಗರು) stringled with twelve gold beads and silver back weighing $4\frac{3}{4}$ tolas including sealing wax	35	0	0
10.	One eight-cornered gold savanthige huvu (ಶಾವಂತಿಗೆ ಹುವು) with silver back weighing about $10\frac{3}{4}$ tolas including wax	50	0	0
11.	One gold savanthige huvu with silver back weighing $6\frac{3}{4}$th tolas with wax ...	25	0	0
12.	One gold addige (ಅಡ್ಡಿಗೆ) weighing $7\frac{1}{2}$ tolas with wax and thread ...	80	0	0
13.	One gold bangle (ಕಟ್ಟಿ) weighing $7\frac{1}{2}$ tolas	120	0	0
14.	Two gold chowri kattu with silver back and screw (ಸುತ್ತು) weighing $5\frac{1}{2}$ tolas with wax	35	0	0
15.	One golden sara with gold beads, corals and thali weighing 6 tolas including wax	30	0	0
16.	Three strings of small gold beads with thali weighing $2\frac{3}{4}$ tolas including wax and glass beads	45	0	0
17.	One small golden savanthige huvu with silver back weighing 1 tola with wax	3	0	0
18.	A pair of golden ear ornaments (ಓಲೆ) each attached with two strings of tiny golden beads weighing $1\frac{3}{4}$ tolas with wax	25	0	0
19.	One pair of golden chalathumbu (ಚಳತುಂಬು) with ordinary pearls weighing $\frac{3}{4}$ tola	4	0	0
20.	One pair of golden ear ornaments (ಬುಗಡಿ) stringled with good pearls weighing $1\frac{3}{4}$ tolas	40	0	0
21.	One golden talisara with twelve gold beads, one tali, four corals and two stones weighing 2 tolas with wax and thread, etc.	6	0	0
22.	One silver waist belt with silver beads weighing $13\frac{1}{2}$ tolas	6	8	0
23.	Four big corals ordinary, used for haradigundu (ಹರಡಿಗುಂಡು)	13	0	0
24.	One silver waist thread with screw weighing nine tolas	6	0	0
25.	Silver bangles weighing 24 tolas	12	0	0
26.	One silver sivadara weighing 14 tolas	7	0	0
27.	Two pairs of pearl ear-rings tied up with gold and silver wires ...	1	0	0
28.	One twisted silver bangle weighing $5\frac{3}{4}$ tolas	3	0	0
29.	A piece of gold and a sheet of gold weighing two pies in all ...	5	0	0
30.	One Surthi rupee and seven Raja rupees somewhat black as if it were hidden in the earth	8	0	0
31.	Three scales used for weighing gold and silver, one of which has a wooden case	2	0	0
32.	Cash tied up in a white cloth	100	0	0
33.	Cash found in a bag	3	0	0
34.	Cash found in a money purse	6	0	0
35.	Two laced chunadi (ಚೌನಡಿ) turbans	3	0	0
36.	One red silk handkerchief (big) with big chowklies..	8	0	0
37.	Do do with small chowklies and rudrakshi ...	3	0	0
38.	One dhoti with silk rudrakshi border	6	0	0
39.	Do with silk kusambi rudrakshi border	5	0	0
40.	One silk bordered panche	3	0	0
41.	One panche with a tiny silk border	1	8	0
42.	One unwritten stamp paper No. 989, dated 4th October 1901, of the value of Re. 1 bearing the name of Karibasavaiya, son of Dodda Subbaiya of Malogahalli.			
43.	Do do No. 415, dated 1st August 1901, of the value of annas 4 bearing the name of Nanja, son of Balagai Huva of Honnur.			

44. One unwritten stamp paper No. 3093, dated 14th May 1903, of the value of annas 4, bearing the name of one Bomma of Vulikebbemole.
45. Do do No. 918, dated 27th September 1901, of the value of annas 4, bearing the name of one Samba, son of Balagai Dyavara Gudda of Honnur.
46. One letter written by Madavanahalli Vustad Channasetty to Puttamarappa, brother of Duggahatti Hutchappa and posted.
47. Two letters of enquiry by Nanjaiya.

Total 870 0 0

C. KRISHNA RAO,
for *Supt. of Police, Mysore Dt.*

Descriptive roll of a man found dead on 29th March 1906, under a tree in the field of Kabballi Chandriah, situated by the side of the foot-path between Hangala and Devarahalli within the limits of the Gundlupet Taluk :—

Name—Not known.
Caste— Do
Residence—Do
Height—5 feet, 6 inches.
Age—About 60 years.
Complexion—Dark.
Descriptive marks—Round face ; had a tuft of hair on his head ; grey hairs on the head, chin, etc. Body, etc., emaciated.
Property found—A string containing bhadrashi and an idol named Manteswami made up of copper and silver round the neck.

Descriptive roll of a dead body found in Gundlupet Kasba on 28th February 1906 :—

Name—Munisawmy Pillay.
Caste—Vellal Wakkaliga.
Age—About 45 years.
Residence—Sultan bateri.
Height—5¼ feet.
Complexion—Dark, long face.
Property found—A small copper vessel (ಬೊಕ್ಕಶ) ; a tin cup (ಬಟ್ಟು).
Remarks—Died of fever.

MAHOMED JAFFER,
Supt. of Police, Mysore Dt.

Dated 27th March 1906.

Descriptive Roll of a person found dead and unclaimed :—

Place where found—Near the School in the Channagiri town, close to the tunnel on the Channagiri-Chitaldrug road, on 9th March 1906.
Sex—Male.
Age—Forty years.
Complexion—Dark.
Height—Five feet, four inches.
Marks of identification—Round face, marks of small-pox all over the body. Had torn clothes on.
Articles found near the body—An empty calabash was lying near the body.

MD. ZAHIRUDDIN MECCAI,
Superintendent of Police, Shimoga Dist.

MISCELLANEOUS.

BANGALORE DISTRICT.

It is hereby notified that the undermentioned Jodi village will be sold by public auction on account of arrears of revenue due to Government at Ardesahalli at 11 A.M., on the 3rd May 1906 :—

Aradesahalli, Jala hobli, Devanhalli Taluk, Bangalore District.

For further particulars see page 516, Part II of the *Mysore Gazette* dated 5th April 1906.

D. DEVARAJ URS,
Dy. Comr.

KOLAR DISTRICT.

Notification dated 17th March 1906.

It is hereby notified that the following documents are lying unclaimed for more than two years in the undermentioned Sub-Registry Offices in the Kolar District and that they will be destroyed in accordance with Section 85 of the Registration Regulation, if they are not claimed by persons entitled to the same in the respective Sub-Registry Offices within one month from the date of the publication of this notification in the *Mysore Gazette*:—

Serial No.	Name of Sub-Registry Office	Name of the book	Number of the instrument	Date of execution	Date of registration or refusal	Name of executant	Name of claimant	Nature and value of transaction
1	Bowringpet	Book I ..	28 / 1903-04	9th July 1903	9th July 1903	Chikkappacha	Krishnamachari	Sale deed for Rs. 50.
2	Do	Do ...	373 / 1903-04	23rd January 1903	13th February 1903	Lakshamakka	Sampangaiya	Deed of cancellation of a previous maintenance deed.
3	Mulbagal	Do ...	469 / 1902-03	19th November 1901	10th June 1903	Narayanasetti	Avani Matt represented by Sankra Bharathiswami	Sale deed for Rs. 240.
4	Do	Do	167 / 1903-04	12th September 1903	17th September 1903	Mallappa, Ramanna ...	[illegible] . .	[illegible]
5	Malur	Do ...	7 / 1903-04	5th June 1903	2nd July 1903	Narasimha Reddi	Chennappa	Sale deed for Rs. 60.
6	Do	Do ...	251 / 1903-04	12th September 1903	14th November 1903	Thimmarayappa	Munisamachari	Do

K. P. PUTTANNA CHETTY,
District Registrar.

HASSAN DISTRICT.

Memo dated 23rd March 1906.

Under Rule III of the Government Notification No. 11289—Ex. F. 3-1901, dated 7th January 1902, the Deputy Commissioner, Hassan District, hereby delegates to the Excise Assistant Commissioner, Hassan District, the following powers vested in him, under the Excise Regulation of 1901 :—

(1) Power to permit import of liquor or intoxicating drug into Mysore under Section 6.

(2) Power to permit export of liquor or intoxicating drug from Mysore under Section 7.

(3) Power to grant licenses for the exclusive privileges of manufacture, etc., under Section 16.

(4) Power to cancel or suspend licenses or permits under Section 26.

P. R. W. WETHERALL, *Dy. Comr.*

Notification dated 11th April 1906.

The levy of toll on the Hassan-Arsikere road in the Hassan District, having been sanctioned by Government in Proceedings No. 9511-50—L. B. (305-05)-2, dated 16th March 1906, the public are hereby informed that from and after the 1st May 1906, toll-gates will be established, one near the junction of the Tiptur-Dudda road with the Hassan-Arsikere road and another on the Hassan-Arsikere road on the Hassan side of Dudda.

1. Until the 1st July 1906, only half the rates as specified in the appended schedule will be levied on carts, etc., passing along the road.

2. Only one toll shall be levied at either of the two gates on any cart, etc., passing along the road, if within a period of twenty-four hours, *viz.*, from sunrise to sunrise.

3. No tolls shall be levied for the passage of carriages, carts or animals (*vide* Section 65 of the Local Boards Rules)—

(*a*) belonging to Local Boards.

(*b*) conveying District Fund servants on duty, or property in the custody of such servants,

(*c*) licensed by the District Board, during the period for which they have been licensed, or

(*d*) engaged by the Postal Department to convey mails. Mail tongas carrying passengers in addition to mails, are exempted from payment of tolls. (*Vide* Government Proceedings No. 9079-86—L. B. (315-05)-2, dated 5th March 1906.)

(*e*) No toll shall be paid to the passage of troops, or Military stores, or equipages, or of any Police or other Government officers on duty, or on passage of any property *bonâ fide* belonging to Government, as established by the production of a certificate from the Head of the Department to which it belongs.

4. A table of the authorized tolls shall be legibly written in English and in Kannada and shall be put up in a conspicuous place near the toll-gate.

5. Tolls shall be collected at the toll-gates only.

6. Any person who fraudulently or forcibly passes any toll-bar, without paying the proper toll, or who obstructs the toll-collector in the discharge of his duties, shall be liable on conviction before a Magistrate, to simple or rigorous imprisonment for any term not exceeding three months, or to a fine not exceeding 50 rupees.

7. When payment of any toll is made, a receipt shall be granted by the person to whom the payment is made in such form as the District Board may, from time to time, prescribe.

8. In all cases of resistance to the lawful authority of the toll-collectors appointed under these rules, all Police Officers shall assist the toll-collectors, when required, and for that purpose shall have the same power which they have in the execution of their ordinary Police duties.

SCHEDULE.

Particulars.	Rate.		
On every four-wheeled carriage	2	0	0
Do two-wheeled carriage	1	0	0
Do Ekka	0	4	0
Do hackney on springs	0	2	0
Do cart and hackney not on springs drawn by eight bullocks, buffaloes, horses, ponies, asses, or mules, if laden	1	8	0
Do do if not laden	0	8	0

Particulars.	Rate.
On every cart and hackney drawn by six bullocks, buffaloes, horses, ponies, asses, or mules, if laden	0 12 0
Do do if not laden	0 6 0
Do cart and hackney drawn by four bullocks, buffaloes, horses, ponies, asses, or mules, if laden	0 8 0
Do do if not laden	0 4 0
Do cart and hackney drawn by two bullocks, buffaloes, horses, ponies, asses, or mules, if laden	0 4 0
Do do if not laden	0 2 0
Buffaloes or bullocks per head, if laden	0 1 0
Do if not laden	0 0 6
On every elephant	1 8 0
Do camel, if laden	0 8 0
Do camel, if not laden	0 4 0
Do horse, if laden or ridden	0 1 6
Do horse, if unladen or led	0 0 9
Do tattu or mule, if laden or ridden	0 0 9
Do do unladen or led	0 0 6
Do ass, if laden or ridden	0 0 6
Do ass, unladen or led	0 0 3
Do sheep or goat or pig	0 0 1
Do palanquin, dooly, palna or tonjon with 8 bearers	1 0 0
Do do with 6 do	0 12 0
Do do with 4 do	0 8 0
Do do with 2 do	0 4 0

N. B.—No toll to be levied from foot-passengers. Animals drawing any vehicle for which toll can be demanded, are not to be also charged with toll.

P. R. W. WETHERALL,
President.

SHIMOGA DISTRICT.

Notification dated 12th April 1906.

Under the authority of Rule XII of the Government Notification No. 245—1300, dated 2nd October 1901, it is hereby notified for the information of the public that the Range Forest Officers are empowered to issue paid licenses for felling and transport of timber, bamboos and firewood from the District Forests (unreserved lands) of the Shimoga District:—

No.	Name of Officer	Powers	Locality where the powers are to be exercised
1	Range Forest Officers	Power to issue paid licenses for the felling and removal of— 1. Timber of unreserved species. 2. Bamboos. 3. Dry firewood.	In the maidan tracts within their ranges.

All the Revenue, Forest and Police Officers are hereby authorised to check the transport of timber, bamboos and firewood in transit.

M. S. NARAYAN RAO, *Dy. Comr.*

CHITALDRUG DISTRICT.

OFFICIAL MEMORANDUM.

Dated 26th March 1906.

In pursuance of the instructions conveyed in Government Notification No. 11289—Ex. F. 3-1901, dated 7th January 1902, the undersigned hereby delegates the following powers to the Excise Assistant Commissioner of the Chitaldrug District, *viz*:—

(1) Power under Sections 6 and 7 of the Excise Regulation to grant permission for the import and export of liquor or intoxicating drug.

(2) Power under Section 16 to issue license for the privilege of manufacture or sale of liquor or intoxicating drug.

(3) Power under Section 26 to cancel or suspend license or permit granted under this Regulation.

(4) Power to fine up to Rs. 25 (twenty-five) licensees for breaches of license conditions.

H. RAMANUJAIENGAR, *Dy. Comr.*

LEASE OF TOLLS ON HARIHAR BRIDGE FOR ONE YEAR.

1. Notice is hereby given that the right of collecting tolls on the Harihar bridge for one year, from 1st July 1906 to 30th June 1907, will be sold by public auction in the Deputy Amildar's office at Harihar, on 29th may 1906, by the Deputy Commissioner of the Chitaldrug District or an Assistant Commissioner deputed by him for the purpose.

2. The highest bid, if approved, will be accepted by the Deputy Commissioner, subject to the sanction of Government. The Deputy Commissioner reserves to himself the power of refusing or accepting the highest or any bid that may be offered.

3. The person whose bid is accepted by the Deputy Commissioner, will be required to deposit at once in cash one-fourth of the amount of the bid plus Local cess thereon at one anna in the rupee, and on the confirmation of the same by Government, to pay the remaining amount with Local cess in nine equal monthly instalments to the Davangere Taluk Treasury, on the 10th of every month commencing from the 10th August 1906, the deposit being appropriated for the 10th, 11th and 12th instalments. He shall furnish two sureties for the regular payment of monthly instalments and execute the requisite agreement on stamp paper within three days from the date of intimation of confirmation of the sale. Failure to conform to these conditions shall render the deposit liable to forfeiture and contract liable to resale at the risk of the purchaser, and any loss that may accrue to Government will be summarily recovered by the distraint and sale of his or of the sureties' property.

4. Any instalment that may not be paid on or before the prescribed date shall be charged with interest at the rate of 6 per cent per annum.

5. The contractor shall be required to pay Local cess at the rate of one anna in the rupee on the amount of his contract.

6. The arrears due by the contractor or his sureties shall be recovered under the rules in force for the recovery of the arrears of land revenue.

7. The contractor will be required to bind himself to have an account kept showing the daily collections and it shall be open to inspection by the Deputy Commissioner or others deputed by him.

8. The contractor will further be bound to levy no tolls other than those enumerated in the schedule annexed and to conform to the rates therein laid down on pain of being prosecuted for criminal offence and forfeiture of his contract.

9. The contractor shall levy no tolls for passage of troops or Military stores or equipages, or of Police and other officers on duty or any property *bonâ fide* belonging to Government as established by the production of a certificate from the Head of the Department to which it belongs.

10. A table of tolls authorized to be levied shall be legibly written in English and Kanarese and put up by the contractor in a conspicuous place near the toll-gate.

11. The contractor shall not collect tolls at any place other than that fixed by Government, *viz.*, at the toll-gate.

12. Further particulars, if any required, can be obtained on application to the Deputy Commissioner, Chitaldrug District.

Schedule of rates of toll authorized to be levied on the Harihar bridge.

		Rs.	a.	p.
(1)	On every four-wheeled carriage laden or unladen	0	8	0
(2)	Do elephant laden or unladen	1	0	0
(3)	Do two-wheeled carriage or bullock coach laden or unladen	0	4	0
(4)	Do camel, laden or ridden, unladen or led	0	8	0
(5)	Horse or pony, laden or ridden, unladen or led ...	0	1	0
(6)	Bullock or buffalo, unladen or led	0	0	3
(7)	Do ridden	0	0	6
(8)	Ass, laden or unladen	0	0	6
(9)	Cows, she-buffaloes	0	0	3
(10)	Sheep, goats	0	0	1

B. BHIMA RAO,
for *Dy. Comr.*

BANGALORE DIVISION.

Notification dated 5th April 1906.

The attention of public is invited to the notification in the *Mysore Gazette*, No. 15, dated 12th April 1906, calling for tenders for constructing quarters for the staff of the Government Distillery at Bangalore.

B. VENKATACHAR, *Executive Engineer.*

TUMKUR DIVISION.

Notification dated 10th April 1906.

Rupees seven being arrears due to B. Ganganna, contractor for restoring Thadasur tank, but not for A. R. of Bangalore, Honnavar road, as published in notification, dated 30th January 1906, has been outstanding in the accounts of this office since June 1905. It is hereby notified that if the party does not present himself for payment within one month from date of publication of this notification, the amount will be credited to Government as unclaimed deposits.

C. MADAVA ROW, *Executive Engineer.*

MYSORE DIVISION.

Dated 31st March 1906.

The attention of the public is invited to the notification published on page 483 of the *Mysore Gazette*, Part II, dated 29th March 1906, regarding the tenders required for the restoration of Halebide tank, Registered No. 821, Hunsur Taluk.

V. V. KARVE, for *Executive Engineer.*

SHIMOGA DIVISION.

Notice dated 13th April 1906.

The public are hereby informed that Sudurhalla bridge, in $\frac{6}{7}$ mile of Shimoga-Hyderghar Ghat road, is under repairs, and it is not at present safe for traffic during nights. Temporary road is under construction.

C. A. MAHADEVA SASTRI, *Executive Engineer.*

BANGALORE CITY MUNICIPALITY.

Notice dated 14th April 1906.

It is hereby notified for the information of the public that the marginally noted shop sites in the Basavangudi Extention, Bangalore City, will be sold by public auction on the spot at 8 A.M., on the 30th April 1906.

Basavangudi Extention.	Measurement.
Block No. I, north-west diagonal road— Shop sites Nos. 211, 212, 213, 214, 215, 216, 217, 218, 219, 220 and 221	120×30

2. The purchaser should deposit at the time of sale twenty-five per cent of the purchase money and pay the remainder within fifteen days from the date of sale, failing which the land will be resold at the risk of the first purchaser.

3. The undersigned reserves the power of accepting and refusing the highest bid.

4. As to the other conditions of sale the public are referred to the detailed notice issued in this connection in the Kanarese portion of the Gazette.

A. S. NAGAVKAR, *President.*

MYSORE CITY MUNICIPALITY.

Notice dated 14th April 1906.

The following business will be transacted at the ordinary meeting of the Municipal Commissioners for the City of Mysore to be held in the Rungacharlu Memorial Hall at 8 A.M., on Saturday the 28th April 1906 :—

I. Consideration of accounts of receipt and expenditure with the Auditor's report and other statistics for March 1906.

II. Government Proceedings No. 9645-7—Ml. (455-05)-3, dated 17th March 1906, informing that the Deputy Commissioner's letter regarding the inattention of the Board of Trustees for the Improvement of the City of Mysore, on certain points, has been forwarded to the Chairman for such remarks as he may have to offer on the points referred to, through the Chief Engineer, who will after proper investigation submit his report.

III. Revenue and General Department Secretary's docket No. 9853 –Ml. (466-05)-2, dated 23rd March 1906, requesting to specify the place to which the Octroi Office is proposed to be removed.

IV. President's memo dated 28th March 1906, proposing to transfer the Mysore Water-supply works to the management of the Public Works Department for the reasons stated in the memo.

V. President's memo dated 28th March 1906, proposing to have a separate main to the houses on the Yeleval road, direct from the reservoir and running behind their houses instead of in front.

VI. President's memo dated 28th March 1906, proposing to construct a cart-stand near the present Octroi katte on the Yelwal road.

VII. President's memo dated 28th March 1906, proposing to postpone the sale of old Octroi Office building site in Lushkar Mohalla for some time hence for the reasons given in the memo.

VIII. Government Proceedings No. 10068-9—Ml. (428-05)-2, dated 29th March 1906, informing that in the absence of express statutory authorization, the distraining officer cannot break open the door of a house which contains the property proposed to be distrained.

IX. Deputy Commissioner's memo No. 3091, dated 26th March 1906, forwarding copy of Revd. Sawday's letter regarding the handing over of the Santhepet Boys' School and the site required for the construction of the new School in front of the Victoria Girls' School at Sirampet.

X. Senior Surgeon's docket No. 5452, dated 29th March 1906, anent the Sanitary Inspector required for the City and correspondence connected therewith.

XI. Copy of the Proceedings of the Improvement Trust Board, dated 28th February 1906.

XII. Remission statement of irrecoverable arrears.

Notice dated 14th April 1906.

The attention of the public is invited to the notification published on page No. 576 of the *Mysore Gazette*, Part II, dated the 12th April 1906, regarding the sale of the right to collect tolls in the City of Mysore, for the year 1906-07, *i.e.*, from the 1st July 1906 up to the 30th June 1907.

C. VENKATA RAO, for *President.*

MORTUARY REGISTER.

FOR THE WEEK ENDING 9TH MARCH 1906.

Bangalore City.

Estimated population according to the Census of 1901. { Males ... 35,964; Females ... 33,483 } Total ... 69,447

Diseases	M.	F.	Total
Plague	5	5	10
Cholera	5	...	...
Small-pox	...	...	5
Fevers	2	6	8
Bowel-complaints ...	5	6	11
Suicide	...	...	...
Wounding	...	...	...
Accident	...	...	...
Snake-bite or killed by wild beasts	...	...	...
All other causes ...	16	36	52
Total ..	33	53	86
Births during the week ...	13	10	23

Mysore City.

Estimated population according to the Census of 1901. { Males ... 34,328; Females ... 33,783 } Total ... 68,111

Diseases	M.	F.	Total
Plague	...	...	...
Cholera	..	...	...
Small-pox	...	...	...
Fevers	...	1	1
Bowel-complaints ...	1	2	3
Suicide	...	...	...
Wounding	...	...	...
Accident	...	...	...
Snake-bite or killed by wild beasts	...	...	...
All other causes ..	15	24	39
Total ...	16	27	43
Births during the week ..	12	11	23

FOR THE WEEK ENDING 16TH MARCH 1906.

Diseases	M.	F.	Total
Plague	4	4	8
Cholera	...	...	...
Small-pox	2	...	2
Fevers	3	3	6
Bowel-complaints ...	4	6	10
Suicide	...	...	...
Wounding	...	...	...
Accident	...	...	...
Snake-bite or killed by wild beasts ...		...	...
All other causes ...	26	32	58
Total ...	39	45	84
Births during the week ...	9	16	25

Diseases	M.	F.	Total
Plague	...	...	...
Cholera	...	...	...
Small-pox	1	...	1
Fevers	...	2	2
Bowel-complaints ...	2	5	7
Suicide	...	...	...
Wounding	...	...	...
Accident ..	...	..	...
Snake-bite or killed by wild beasts	...	...	...
All other causes ..	14	10	24
Total ...	17	17	34
Births during the week ...	10	11	21

By Order,
T. S. NANJAPPA,
Personal Asst. to the Senior Surgeon and Sany. Comr. with the Govt. of Mysore.

Notice dated 5th April 1906.

The undersigned hereby gives notice that a month after date, he intends moving the Hon'ble Chief Court to enrol him as an Advocate thereof.

SHIKARIPUR SUBRAMANYA, B.A., *First Grade Pleader.*

MYSORE GOVERNMENT METEOROLOGICAL DEPARTMENT.

Monthly Means of Meteorological Observations for March 1906.

	BANGALORE	MYSORE	HASSAN	CHITALDRUG
Height of Observatory above Sea Level	3,021 ft.	2,518 ft.	3,091 ft.	2,405 ft.
Barometer (red. to 32°F.) ...	26·960	27·433	26·895	27·530
Temperatures in shade :—				
Daily mean dry ...	77·1	80·7	76·3	82·5
Daily max. do ...	90·8	93·8	93·3	95·4
Daily min. do ...	64·1	68·1	60·6	70·4
Daily mean wet ...	62·9	66·2	62·3	65·3
Daily minimum wet ...	59·6	62·4	57·3	59·8
Temperatures of Radiation :—				
Daily max. Solar Heat in Vacuo	145·4	...	...	...
Daily min. Temp. on Grass	60·3	...	...	...
Rainfall—Total in inches ...	0·60	0·24	0·00	0·00
Wind Direction (daily mean) ...	S S E	S E b E	E S E	S
Velocity (miles per day) ...	181	175	51	123
Clear Sky : Daily percentage ...	79	62	73	87
Bright Sunshine : Hours Daily	9·9	...	...	...

J. COOK,
Director of Meteorology in Mysore.

Dated 12th April 1906.

Daily Means of Observations for the Week Sunday 1st to Saturday 7th April 1906.

No.	BANGALORE	Sunday 1	Monday 2	Tuesday 3	Wednesday 4	Thursday 5	Friday 6	Saturday 7
1	Barometer red. to 32° F.	26·906	26·880	26·880	26·889	26·862	26·855	26·869
2	Daily Barometric range	·132	·160	·133	·154	·159	·133	·142
3	Mean Dry Temperature in shade	81·0	81·5	81·3	82·1	84·6	83·3	83·5
4	Maximum do	94·3	95·6	94·6	95·6	99·1	96·4	95·4
5	Minimum do	68·3	67·8	68·8	70·9	72·3	72·5	72·5
6	Daily range of do	26·0	27·8	25·8	24·7	26·8	23·9	22·9
7	Mean Wet Temperature in shade	65·7	66·3	66·1	67·4	67·3	68·2	68·8
8	Minimum do	62·6	62·1	63·1	63·8	65·0	64·1	66·2
9	Pressure of Aqueous Vapour	·464	·475	·496	·534	·475	·546	·534
10	Humidity	42	41	45	49	40	47	46
11	Wind Vely. in Miles p. day to 8 A. M	160	165	166	180	146	151	167
12	Mean Wind Direction	S S E	S b W	S E b S	S W b S	W S W	S b E	W S W
13	Rainfall in inches to 8 A.M.	0	0	0	0	0	0	0
14	Total Rainfall from 1st January	1·64	1·64	1·64	1·64	1·64	1·64	1·64
15	Per cent of Cloudy Sky	60	10	37	53	7	30	37
16	Character of Weather	Fine	Dust haze	Fine	Fine	Dust haze	Fine	Fine

224

MYSORE GOVERNMENT METEOROLOGICAL DEPARTMENT.

Daily Means of Observations for the Week Sunday 1st to Saturday 7th April 1906.

No.	MYSORE	Sunday 1	Monday 2	Tuesday 3	Wednesday 4	Thursday 5	Friday 6	Saturday 7
1	Barometer red. to 32° F.	27·373	27·351	27·347	27·367	27·345	27·327	27·348
2	Daily Barometric range	·146	·169	·152	·166	·175	·164	·159
3	Mean Dry Temperature in shade	83·3	84·0	84·4	83·9	85·6	85·5	83·8
4	Maximum do	96·4	97·7	97·5	96·2	100·1	99·1	96·5
5	Minimum do	70·8	70·9	71·9	71·7	71·6	72·3	71·7
6	Daily range of do	25·6	26·8	25·6	24·5	28·5	26·8	24·8
7	Mean Wet Temperature in shade	69·0	69·7	71·2	70·4	69·5	69·9	68·8
8	Minimum do	65·5	64·2	68·2	67·9	68·1	66·9	67·3
9	Pressure of Aqueous Vapour	·559	·605	·629	·588	·529	·569	·525
10	Humidity	48	50	53	51	43	47	46
11	Wind Vely. in Miles p. day to 8 A.M.	143	176	172	190	172	205	211
12	Mean Wind Direction	S E b E	S E	S b E	S b W	S S W	S b W	S b W
13	Rainfall in inches to 8 A.M.	0	0	0	0	0	0	0
14	Total Rainfall from 1st January	0·75	0·75	0·75	0·75	0·75	0·75	0·75
15	Per cent of Cloudy Sky	93	7	83	83	83	93	50
16	Character of Weather	Cloudy	Fine clear	Fine	Fine	Fine	Cloudy	Thunderstorm

MYSORE GOVERNMENT METEOROLOGICAL DEPARTMENT.

Daily Means of Observations for the Week Sunday 1st to Saturday 7th April 1906.

No.	HASSAN	Sunday 1	Monday 2	Tuesday 3	Wednesday 4	Thursday 5	Friday 6	Saturday 7
1	Barometer red. to 32° F.	26·839	26·814	26·808	26·838	26·815	26·800	26·814
2	Daily Barometric range	·128	·155	·126	·143	·155	·108	·133
3	Mean Dry Temperature in shade	79·4	80·7	80·6	83·2	80·8	81·1	81·1
4	Maximum do	95·8	98·2	98·4	98·6	98·2	99·4	96·6
5	Minimum do	64·0	64·9	64·6	69·5	64·5	66·1	68·3
6	Daily range of do	31·8	33·3	33·8	29·1	33·7	33·3	28·3
7	Mean Wet Temperature in shade	67·0	66·7	67·9	67·8	62·4	66·2	70·1
8	Minimum do	60·6	63·8	63·2	64·4	59·3	61·5	66·3
9	Pressure of Aqueous Vapour	·520	·477	·486	·499	·336	·481	·583
10	Humidity	43	40	40	42	30	39	49
11	Wind Vely. in Miles p. day to 8 A.M.	48	48	42	73	58	62	83
12	Mean Wind Direction	E b S	E b N	N E b E	W b N	N b E	W N W	W b S
13	Rainfall in inches to 8 A. M.	0	0	0	0	0	0	0
14	Total Rainfall from 1st January	0·03	0·03	0·03	0·03	0·03	0·03	0·03
15	Per cent of Cloudy Sky	60	27	27	53	27	47	57
16	Character of Weather	Fine; sultry	Dust haze	Fine; sultry	Distant thunder	Fine; sultry	Dust haze	Dust haze; sultry

225

226

MYSORE GOVERNMENT METEOROLOGICAL DEPARTMENT.

Daily Means of Observations for the Week Sunday 1st to Saturday 7th April 1906.

No.	CHITALDRUG	Sunday 1	Monday 2	Tuesday 3	Wednesday 4	Thursday5	Friday 6	Saturday 7
1	Barometer red. to 32° F.	27·469	27·436	27·422	27·459	27·444	27·425	27·441
2	Daily Barometric range	·144	·160	·143	·153	·167	·141	·164
3	Mean Dry Temperature in shade	86·8	88·2	88·6	86·3	87·7	87·6	86·5
4	Maximum do	99·3	100·7	100·5	98·6	99·3	100·0	99·5
5	Minimum do	75·3	77·1	77·8	74·9	76·3	76·5	74·8
6	Daily range of do	24·0	23·6	22·7	23·7	23·0	23·5	24·7
7	Mean Wet Temperature in shade	68·1	67·8	67·9	67·5	64·8	68·2	70·7
8	Minimum do	62·7	64·8	61·4	62·9	62·2	62·9	67·5
9	Pressure of Aqueous Vapour	·494	·453	·465	·452	·345	·512	·603
10	Humidity	37	34	32	32	27	39	48
11	Wind Vely. in Miles p. day to 8 A. M	84	120	141	133	143	156	120
12	Mean Wind Direction	N b E	E S E	W	W N W	W b N	S b W	S b W
13	Rainfall in inches to 8 A. M.	0	0	0	0	0	0	0
14	Total Rainfall from 1st January	1·24	1·24	1·24	1·24	1·24	1·24	1·24
15	Per cent of Cloudy Sky	10	0	0	0	0	30	17
16	Character of Weather	Dust haze	Fine clear	Dust haze	Dust storm	Fine clear	Fine; sultry	Fine; sultry

Dated 12th April 1906.

J. COOK, *Director of Meteorology.*

Abstract Statement of Plague Cases and Deaths in the Mysore Province for the week ending Friday the 13th April 1906.

Place	During the week ending 13th April 1906		During the week ending 6th April 1906		Figures for the corresponding week of last year		Number of infected villages
	Attacks	Deaths	Attacks	Deaths	Attacks	Deaths	
Bangalore City	7	7	12	7	18	14	...
Mysore City	...	...	...	...	1	1	...
Bangalore District	...	...	1	3	13	9	2
Mysore District	...	...	...	1	9	6	1
Kolar District (excluding Gold Fields)	5	...	1	1	11	7	2
Kolar Gold Fields	1	1	6	2	4	2	2
Tumkur District	...	...	1	1	7	6	1
Hassan District	...	...	...	...	...	...	...
Chitaldrug District	...	...	1	1	2	2	1
Kadur District	...	...	...	...	...	...	1
Shimoga District	...	...	4	1	6	...	5
Total ...	13	8	26	17	71	47	15

T. S. NANJAPPA,
for *Offg. Sr. Surgn. & Sany. Comr., M. G.*

228

The Mysore Gazette.

VOL. 41.] PUBLISHED BY AUTHORITY. [No. 16.

BANGALORE, THURSDAY, APRIL 19, 1906.

PART IV.

OFFICIAL PAPERS.

Season Report for the Week ending with the 15*th Saturday in* 1906 (14*th April* 1906).

District and Station.	Rainfall up to 8 A.M. on Saturday.					Price of food grains in seers per rupee and market fluctuations in prices of food grains.		
	This week.	Last ten years' average for the corresponding week.	Up to the end of the week from 1st January 1906.					
			This year.	Average of past ten years.	Excess (+) or defect (—) of column 4 compared with column 5.			
1	2	3	4	5	6	7		
	I. c.	I. c.	I. c.	I. c.	I. c.		This week.	Past week.	Past ten years' fortnightly average.
							Seers	Seers.	Seers.
BANGALORE.									
Bangalore C. & M. Station ...	... ...	... ...	... ...	... ...	... ...				
" City & Taluk...	.. ...	... 15	1 83	1 32	+ 0 51	Rice, 2nd sort.	7·50	7·50	9·21
Hoskote ...	... ...	... 13	.. 50	.. 88	— 0 38				
Dodballapur ...	... ...	... 36	... 43	1 32	— 0 89	Ragi	18·50	18·50	22·90
Nelamangala ...	... ...	... 20	. 73	... 98	— 0 25	Kulthi	12·25	12·25	...
Kankanhalli ...	.. ...	... 4	... 63	1 ...	— 0 37	Kadale	8·00	8·00	10·05
Magadi ...	.. ..	.. 28	.. ...	... 85	— 0 85				
Channapatna ...	... ..	... 41	. 14	1 47	— 1 33				
Anekal ...	.. ...	... 20	2 7	1 26	+ 2 81				
Devanhalli ...	... ...	... 24	... 52	... 87	— 0 35				
Closepet ...	.. ..	... 33	... 15	.. 85	— 0 70				
District average...	... ...	... 23	. 70	1 8	— 0 38				
KOLAR.									
Kolar ...	... ...	... 31	... 52	1 2	— 0 50				
Bowringpet ...	... ...	.. 28	... 9	1 6	— 0 97	Rice, 2nd sort.	7·25	7·25	9·20
Chintamani ...	... ...	... 1	1 ...	... 71	+ 0 29				
Mulbagal ...	... ...	... 16	1 60	1 44	+ 0 16	Ragi	15·00	15·00	23·60
Sidlaghatta ...	... ...	... 7	... 36	... 85	— 0 49	Kulthi	15·00	15·00	...
Chikballapur ...	.. ..	... 47	2 44	1 84	+ 1 60	Kadale	9·00	9·00	9·40
Bagepalli ...	... ...	... 16	1 20	51	+ 0 69				
Goribidnur ...	... ..	... 14	... 60	... 60	... ..				
Malur ...	.. ...	.. 33	... 95	... 88	+ 0 7				
Srinivaspur ...	... ...	... 32	1 9	1 26	— 0 17				
Gudibanda ...	... ...	... 4	... 73	... 68	+ 0 5				
District average...	... ...	.. 21	.. 96	... 99	— 0 3				
TUMKUR.									
Tumkur ...	.. ...	... 13	1 20	1 8	+ 0 12				
Maddagiri ...	... ...	... 12	... 28	.. 58	— 0 30				
Chiknayakanhalli ...	... ...	... 7	1 40	... 73	+ 0 67	Rice, 2nd sort.	7·50	7·50	9·35
Sira ...	... ...	... 5	1 37	... 45	+ 0 92				
Gubbi ...	...	... 13	.. 36	... 62	— 0 26	Ragi	16·00	16·00	26·10
Tiptur ...	... ...	... 19	... 20	. 51	— 0 31	Kulthi	12·00	12·00	...
Pavagada ...	... ...	.. 9	... ..	... 43	— 0 43	Kadale	8·00	8·00	9·70
Kunigal ...	... ...	.. 8	.. 44	... 33	+ 0 11				
Koratagere ...	... ...	... 4	1 10	... 53	+ 0 57				
Turuvekere ...	... ...	... 16	... 57	... 44	+ 0 13				
District average...	... ...	... 11	... 69	... 57	+ 0 12				

District and Station.	Rainfall up to 8 A. M. on Saturday.						Price of food grains in seers per rupee and market fluctuations in prices of food grains.							
	This week.		Last ten years' average for the corresponding week.		Up to the end of the week from 1st January 1906									
					This year.		Average of past ten years.		Excess (+) or defect (—) of column 4 compared with column 5					
1	2		3		4		5		6		7			
	I.	c.	I.	c.	I.	c.	I.	c.	I.	c.		This week	Past week.	Past ten years' fortnightly average.
												Seers.	Seers.	Seers.
MYSORE.														
Mysore ...	...	...	...	45	2	41	...	86	+1	55				
Chamrajnagar ...	...	...	..	43	...	...	1	24	—1	24				
Seringapatam ...	.	..	...	35	...	71	...	90	—0	19	Rice, 2nd sort.	8·25	8·25	10·37
Hunsur ...	...	...	...	28	...	12	1	10	—0	98				
Yedatore ...	...	..	...	34	...	65	.	84	—0	19	Ragi	15·00	15·00	21·83
Heggaddevankote ...	...	...	...	80	..	..	4	84	—4	84	Kulthi	13·00	13·00	...
Gundlupet ...	..	...	...	77	1	44	1	60	—0	16	Kadale	9·00	9·00	10·58
Nanjangud ...	...	...	...	44	...	89	1	7	—0	18				
T.-Narsipur ...	...	...	..	34	...	98	1	10	—0	12				
Malvalli ...	...	...	...	14	...	39	...	61	—0	22				
Mandya ...	...	...	...	20	1	90	...	56	+1	34				
Krishnarajpete ...	...	..	..	40	..	80	...	89	—0	9				
Nagamangala ...	...	..	...	32	1	38	..	53	+0	85				
District average...	...	...	...	40	..	89	1	24	—0	35				
HASSAN.														
Hassan ...	...	...	...	45	...	9	1	8	—0	99				
Manjarabad (Saklespur)	..	...	...	35		84	1	26	—0	42				
Arkalgud ..	...	..	..	46	2	60	1	8	+1	52				
Belur ...	...	...	..	43	1	26	1	3	+0	23	Rice, 2nd sort.	9·00	8·50	10·50
Channarayapatna ...	...	..	...	42	1	10	...	70	+0	40				
Arsikere ...	...	..	...	56	...	...	1	..	—1	...	Ragi	18·00	16·00	24·87
Hole-Narsipur ...	..	...	...	70	1	19	1	40	—0	21	Kulthi	12·00	12·00	...
Alur ..	...	...	...	43	..	5	...	90	—0	85	Kadale	9·50	8·50	9·68
District average...	...	...	...	48	...	89	1	5	—0	16				
SHIMOGA.														
Shimoga ...	...	..	...	43	...	94	..	84	+0	10				
Channagiri ...	...	...	...	17	...	20	...	51	—0	31	Rice, 2nd sort	8·50	8·00	12·44
Honnali ...	...	..	...	35	1	20	1	12	+0	8				
Shikarpur ...	...	..	...	17	...	...	...	49	—0	49	Ragi	14·75	16·00	30·86
Sorab ...	..	...	..	18	..	43	..	45	—0	2	Kulthi	11·50	11·00	...
Sagar ...	...	...	...	25	1	89	...	71	+1	18				
Nagar (Kallurkatte) ..	..	..	...	6	..	56	...	43	+0	13				
Tirthahalli ...	...	...	...	45	1	15	1	1	+0	14				
Kumsi ...	..	...	..	34	...	16	...	87	—0	1				
District average...	...	..	..	26	...	73	...	64	+0	9				
KADUR.														
Chikmagalur ...	..	...	...	35	1	55	1	13	+0	42				
Kadur ..	...	...	...	31	...	...	..	64	—0	64	Rice, 2nd sort	7·50	8·00	10·70
Tarikere ...	...	...	..	37	...	76	...	65	+0	11				
Koppa .	...	...	..	31	2	69	1	8	+1	61	Ragi	15·00	15·00	23·70
Mudgere ...	...	...	...	49	...	65	1	32	—0	67	Kulthi	11·00	11·00	...
Yedahalli ...	...	...	...	36	...	40	...	99	—0	59	Kadale	8·00	8·00	10·20
Sringeri ..	..	...	...	61	1	3	1	7	—0	4				
District average ..	...	...	..	40	1	1	...	98	+0	3				
CHITALDRUG.														
Chitaldrug ..	...	...	...	23	1	22	...	39	+0	83				
Challakere ...	..	..		21	...	8	..	59	—0	51	Rice, 2nd sort	7·50	7·50	10·35
Hiriyur ...	..	.	...	8	...	11	..	35	—0	24				
Holalkere ...	..	..	.	65	...	20	1	3	—0	83	Ragi	16·00	16·00	27·40
Davangere ...	...	...	...	18	...	41	..	51	—0	10	Kulthi	13·00	13·00	...
Molakalmuru ...	..	..	...	15	...	24	...	22	+0	2	Cholum	15·00	15·00	24·30
Jagalur ...	..	..	...	13	...	27	...	69	—0	42	Kadale	9·00	9·00	10·30
Hosdurga ..	...	...	.	13	...	10	..	44	—0	34	..			
Harihar ..	...	...	..	12	2	94	...	31	+2	63				
District average...	..	...	...	20	...	62	...	51	+0	11				
Provincial average...	...	...	...	28	...	81	..	88	—0	7				

Note—Rice (husked)—Oryza Sativa.
Ragi—Eleusine Corocana.
Kulthi—(Horse gram) Dolichos Biflorus.
Cholum—Sorghum Vulgare.
Kadale—(Bengal gram) Ciser Arietinum.

DISTRICT REPORTS.

8. Markets how supplied.

9. Progress of agricultural operations, state of standing crops, prospects and probable outturn of harvests, serious damage done to crops by insects or other natural calamities.

10. Prospects of season, tracts in which the rainfall has been insufficient, areas affected by scarcity, number of people under relief, and state of food stocks.

11. Public health.

12. Remarks as to the condition of agricultural stock, failure of pasturage, of fodder, etc.

BANGALORE CIVIL AND MILITARY STATION.

		Normal.	*Current.*	
Prices of food grains—	Rice	... 10 to 11	6½ to 7	seers per rupee.
	Ragi	... 25 to 30	16 to 17	

Ragi thrashing is over. Manure is being collected. Raiyats are anxiously expecting rains.

Outturn of harvested ragi is from 5 to 6 annas.

Cattle are in good condition.

Water and fodder sufficient.

BANGALORE CITY AND TALUKS.

8. Market well supplied. Prices steady.

9. Standing crops are in good condition. Potato harvest is almost over in Hoskote. Sugar-cane is being harvested and resown throughout the district. The probable outturn is 8 annas on an average.

10. Prospects of the season moderate. Want of rain is keenly felt throughout the district.

11. Public health generally good. Fever prevails in Kankanhalli and small-pox in Anekal.

12. Cattle healthy. Foot and mouth disease is reported to prevail in some parts of Hoskote. Water is available in wells sunk in the beds of tanks in places where there is no water in tanks. Dry fodder is available.

KOLAR.

8. Market well supplied.

9. Sugar-cane is being planted in Bowringpet, Sidlaghatta, Chikballapur, Goribidnur, Srinivaspur and Gudibanda and it is also being milled in almost all the taluks. Vysakhi paddy is being harvested in Sidlaghatta and Bagepalli.

10. Prospects of the season depend upon early mungar rains. Food stocks are available.

11. Public health generally good.

12. Water and fodder generally available, but the supply of water is running short. Pasture in fields and grazing lands is almost exhausted.

TUMKUR.

8. Market well supplied.

9. Paddy in Maddagiri, Sira and Pavagada; cholum in Maddagiri, Sira and Pavagada; sugar-cane in Gubbi, Kunigal and Koratagere; cotton in Sira and Pavagada and kadale in

Gubbi are being harvested. Sugar-cane is sown in Maddagiri and Koratagere. Standing crops in Tumkur, Chiknayakanhalli, Tiptur and Koratagere are withering. Elsewhere they are in fair condition. The following is the estimated outturn of crops :—

Maddagiri—Paddy 8 annas, cholum 5 annas.

Sira—Paddy 4 to 8 annas, cholum 2 to 4 annas, cotton 1 to 2 annas.

Gubbi—Sugar-cane and kadale 4 annas.

Pavagada—Paddy 2 annas, cholum 4 annas, cotton 1 anna.

Kunigal—Sugar-cane 4 annas.

10. Prospects of the season not encouraging. Food stocks sufficient for the present. Supply of water in wells is diminishing in several parts of the district. Mungar rains are anxiously awaited.

11. Public health generally good, except that small-pox is prevalent in parts of Gubbi, Tiptur and Turuvekere.

12. Cattle healthy, except that foot and mouth disease is prevalent in parts of Gubbi, Tiptur and Turuvekere. In parts of Tiptur and Turuvekere date leaves are used as fodder for cattle. Water is drawn from wells in most parts of the district for cattle to drink.

MYSORE.

8. Market well supplied.

9. The standing crops *viz.*, sugar-cane, mulberry and cotton are reported to be in a fair condition in Chamrajnagar, Seringapatam, Nanjangud, T.-Narsipur, Malvalli and Krishnarajpete. The lands have been ploughed up, manured and made ready for sowing. The raiyats are very anxiously waiting for rain which is badly wanted throughout the district.

10. Prospects of the season indifferent. A great deal depends upon early showers. Food stocks sufficient for the present.

11. Public health generally good. Small-pox still prevails in Heggaddevankote and Hunsur.

12. Cattle generally healthy except in parts of Chamrajnagar and Malvalli, where they are reported to be suffering from foot and mouth diseases. Fodder is generally available, but want of water is much felt in many taluks.

HASSAN.

8. Market fairly well supplied. Prices high.

9. Sugar-cane in Hassan, Belur, Hole-Narsipur, Arkalgud and Alur; and paddy in Hassan and Manjarabad are reported to be in fair condition. Sugar-cane and paddy in Arsikere are reported to be withering for want of rain. The outturn of sugar-cane in Hole-Narsipur is estimated at 10 annas.

10. Prospects fair. Food stocks sufficient for the present.

11. Public health generally good. Small-pox is reported to be prevalent in several parts of the district.

12. Cattle generally healthy, but foot and mouth disease is reported to exist in parts of Manjarabad, Belur, Arsikere and Arkalgud. Fodder and water generally available except in parts of Arsikere and Channarayapatna, where some difficulty is felt.

SHIMOGA.

8. Market well supplied. Prices high.

9. Vysakhi paddy in Channagiri, Sagar and Nagar is in a fair condition in areas where water is available. In other parts it is suffering for want of water. Sugar-cane plants are thriving well in parts of Sagar and Nagar where water is available; in other localities the young plants are suffering for want of water-supply.

10. Food stocks are enough for the present except in parts of Channagiri, Shikarpur, Sorab and Kumsi.

11. Public health good.

12. Fodder supply is running short in Channagiri, Honnali, Shikarpur, Sorab and Kumsi. Scarcity of water is being felt in all taluks.

KADUR.

8. Market fairly supplied.

Land is being ploughed in parts of Koppa. Sugar-cane is being planted in parts of Tarikere. Standing crops, *viz.*, kar-paddy and sugar-cane in parts of Kadur are in fairly good conditon, while in Chikmagalur they are not flourishing for want of water. Sugar-cane in parts of Kadur and cotton in parts of Tarikere are being harvested. Ploughing and other agricultural operations are delayed for want of rain.

10. Prospects of the season fair, but rain is needed for standing crops. Food stocks are available and sufficient for the present.

11. Public health generally good except that small-pox prevails in parts of Chikmagalur, Mudgere and Yedahalli.

12. Foot and mouth disease to cattle is reported to be subsiding. Water and fodder generally available. Water-supply is scanty in parts of Chikmagalur, Tarikere, Kadur and Yedahalli.

CHITALDRUG.

8. Market well supplied.

9. Paddy is reported to be in fairly good condition under kapile wells in Hiriyur. The outturn of crops harvested during the week is as follows :—

Hiriyur—Wheat, kadale and ragi on dry lands 2 annas, ragi under kapile wells 8 to 10 annas, paddy under kapile wells 8 to 10 annas and navane, togari and cotton 4 annas.

Holalkere—Cotton 6 annas.

Davangere—Sugar-cane, kadale and paddy 8 annas.

Molakalmuru—Navane, cholum (white) and cotton 4 annas.

Harihar—Cotton 4 to 8 annas.

10. Prospects of the season fair. Food stocks available.

11. Public health good.

12. Cattle are reported to be healthy in all the taluks. Water and fodder are procurable in limited quantities.

BANGALORE,
18*th April* 1906.

B. K. VENKATA VARADA IYENGAR,
Secy. to the Govt. of H. H. the Maharaja of Mysore,
Gen. & Rev. Dept.

232

Prices Current [Wholesale] of Food Grains, &c., at the Head-Quarters of the several Districts of the Mysore State during the fortnight ending 31st Mar. 1906.

ಸನ್ 1906ನೆ ಇಸವಿ ಮಾರ್ಚಿ ಮಾಹೆ 31ನೆ ತಾರೀಖಿಗೆ ಆಯ್ದೆಯಾದ ಪಂಧ್ರಾವಾಡಾ ಬಾಬತು ಒಟ್ಟು ವ್ಯಾಪಾರದ ದರ್ಕಾರಗಳಲ್ಲಿ ಪುರೋಭಾಗ್ಯದ ಆಹಾರ ಜಿನಸೀ ವಗೈರೆ ನಿರಖುನಾಮಾ ಡಿಸ್ಟ್ರಿಕ್ಟ್ ಹೆಡ್ ಕ್ವಾರ್ಟರ್‌ಗಳ ಬಾಬತು.

Prices per 10 maunds of 82 2/7 lbs. each ಮಣ 1ಕ್ಕೆ 82 2/7 ಪೌನುಗಳ ಮೇರಿಗೆ 10 ಮಣಕ್ಕೆ ಬರೀದಿ

Grains and Pulses ಧಾನ್ಯ ಮತ್ತು ಕಾಳುಗಳು

District ಡಿಸ್ಟ್ರಿಕ್ಟ	Rice unhusked (paddy) Oryza sativa ಭತ್ತ 2									Rice, best sort ಅವಲ್ ತರಹೆ ಅಕ್ಕಿ 3									Rice, common ಸಾಧಾರಣ ಅಕ್ಕಿ 4									Wheat Triticum sativum ಹೊಟ್ಟೆ ಗೋಧಿ 5									Barley Hordeum vulgare ಜವೆ ಗೋಧಿ 6								
	Present fortnight ಪ್ರಸ್ತುತ ಪಂಧ್ರಾವಾಡಾ			Past fortnight ಗುಜಿಷ್ಟಾ ಪಂಧ್ರಾವಾಡಾ			Corresponding fortnight of last year ಗುಜಿಷ್ಟಾ ಸಾಲ್ ಪೊಕಾಬಿಲಿ ಪಂಧ್ರಾವಾಡಾ			Present fortnight ಪ್ರಸ್ತುತ ಪಂಧ್ರಾವಾಡಾ			Past fortnight ಗುಜಿಷ್ಟಾ ಪಂಧ್ರಾವಾಡಾ			Corresponding fortnight of last year ಗುಜಿಷ್ಟಾ ಸಾಲ್ ಪೊಕಾಬಿಲಿ ಪಂಧ್ರಾವಾಡಾ			Present fortnight ಪ್ರಸ್ತುತ ಪಂಧ್ರಾವಾಡಾ			Past fortnight ಗುಜಿಷ್ಟಾ ಪಂಧ್ರಾವಾಡಾ			Corresponding fortnight of last year ಗುಜಿಷ್ಟಾ ಸಾಲ್ ಪೊಕಾಬಿಲಿ ಪಂಧ್ರಾವಾಡಾ			Present fortnight ಪ್ರಸ್ತುತ ಪಂಧ್ರಾವಾಡಾ			Past fortnight ಗುಜಿಷ್ಟಾ ಪಂಧ್ರಾವಾಡಾ			Corresponding fortnight of last year ಗುಜಿಷ್ಟಾ ಸಾಲ್ ಪೊಕಾಬಿಲಿ ಪಂಧ್ರಾವಾಡಾ			Present fortnight ಪ್ರಸ್ತುತ ಪಂಧ್ರಾವಾಡಾ			Past fortnight ಗುಜಿಷ್ಟಾ ಪಂಧ್ರಾವಾಡಾ			Corresponding fortnight of last year ಗುಜಿಷ್ಟಾ ಸಾಲ್ ಪೊಕಾಬಿಲಿ ಪಂಧ್ರಾವಾಡಾ		
	Rs	a	p	Rs	a	p	Rs	a	p	Rs	a	p	Rs	a	p	Rs	a	p	Rs	a	p	Rs	a	p	Rs	a	p	Rs	a	p	Rs	a	p	Rs	a	p	Rs	a	p	Rs	a	p
Bangalore	23	8	2	23	8	2	15	10	9	53	0	0	53	0	0	44	11	2	46	2	7	46	2	7	37	10	7	38	14	5	35	14	7	31	13	4		*			*			*	
Kolar ...	22	0	0	22	0	0	20	0	0	57	0	0	57	0	0	50	0	0	53	0	0	53	0	0	44	0	0	50	0	0	50	0	0	40	0	0	50	0	0	50	0	0	40	0	0
Tumkur ...	22	0	0	22	0	0		*		63	0	0	63	0	0		*		48	0	0	48	0	0		*		58	0	0	58	0	0		*		58	0	0	58	0	0		*	
‡ Mysore...	27	3	2	27	3	2	24	3	3	51	3	2	50	4	6	43	14	2	43	14	2	43	14	2	38	9	7	58	12	4	57	12	8	36	3	11		*			*			*	
Hassan ...	20	9	2	20	9	2	13	11	5	53	7	9	51	6	10	41	2	3	51	6	10	45	11	5	37	6	5	41	2	3	41	2	3	41	2	3	41	2	3	412		3	41	2	3
Shimoga ...	17	12	2	19	9	4	16	14	10	55	15	5	55	15	5	49	1	0	49	1	0	49	1	0	35	8	4	55	15	5	55	15	5	32	8	0		*			*			*	
Kadur ...	15	0	0	14	0	0	14	0	0	52	0	0	52	0	0	50	0	0	50	0	0	42	0	0	36	0	0	50	0	0	50	0	0	36	0	0	32	0	0	32	0	0	31	0	0
Chitaldrug	25	11	5	25	11	5	17	2	4	58	12	5	58	12	5	45	11	5	51	6	10	51	6	10	41	2	3	51	6	10	51	6	10	34	4	7	51	6	10	51	6	10	34	4	7

Article not available.

‡ Columns 3, 4 and 5—Increase owing to short supply to market.

Prices **Current** [Wholesale] of Food Grains, &c., at the Head-Quarters of the several Districts of the Mysore State during the fortnight ending 31st Mar. 1906—*contd.*

ಸನ 1906 ನೆ ಇಸವಿ ಮಾರ್ಚಿ ಮಾಹೇ 31ನೆ ತಾರೀಖಿಗೆ ಆಖೈರಾದ ಪಂಧ್ರಾವಾಡಾ ಬಾಬತು ಒಟ್ಟುವ್ಯಾಪಾರದ ದುಕಾನಗಳಲ್ಲಿ ಪುರೋಖ್ತ್ ಆದ ಆಹಾರಜಿನಸಿ ವಗೈರೆ ನಿರಖುನಾಮಾ-ಡಿಸ್ಟ್ರಿಕ್ಟ್ ಹೆಡ್ ಕ್ವಾರ್ಟರ್‌ಗಳ ಬಾಬತು-ಸಕೇಪ.

Prices per 10 maunds of 82⅔ lbs. each ಮಣ 1ಕ್ಕೆ 82⅔ ಪೌನುಗಳ ಮೇರಿಗೆ 10 ಮಣಕ್ಕೆ ಖರೀದಿ

Grains and Pulses ಧಾನ್ಯ ಮತ್ತು ಕಾಳುಗಳು

District ಡಿಸ್ಟ್ರಿಕ್ಟ	Cholam or javar Sorghum vulgare ಜೋಳ 7			Kambu or Bajara Pennisetum typhoideum ಸಜ್ಜೆ 8			Ragi Eleusine coracana ರಾಗಿ 9			Maize Zeamays ಮುಸುಕಿನ ಜೋಳ 10			Bengal gram Cicer arietinum ಕಡಲೆ 11		
	Present fortnight ಸಜಕ್ಕರ್ ಪಂಧ್ರಾವಾಡಾ	Past fortnight ಗುಜಷ್ತಾ ಪಂಧ್ರಾವಾಡಾ	Corresponding fortnight of last year ಗುಜಷ್ತಾ ಸಾಲ್ ಪೊಕಾಬಿಲಿ ಪಂಧ್ರಾವಾಡಾ	Present fortnight ಸಜಕ್ಕರ್ ಪಂಧ್ರಾವಾಡಾ	Past fortnight ಗುಜಷ್ತಾ ಪಂಧ್ರಾವಾಡಾ	Corresponding fortnight of last year ಗುಜಷ್ತಾ ಸಾಲ್ ಪೊಕಾಬಿಲಿ ಪಂಧ್ರಾವಾಡಾ	Present fortnight ಸಜಕ್ಕರ್ ಪಂಧ್ರಾವಾಡಾ	Past fortnight ಗುಜಷ್ತಾ ಪಂಧ್ರಾವಾಡಾ	Corresponding fortnight of last year ಗುಜಷ್ತಾ ಸಾಲ್ ಪೊಕಾಬಿಲಿ ಪಂಧ್ರಾವಾಡಾ	Present fortnight ಸಜಕ್ಕರ್ ಪಂಧ್ರಾವಾಡಾ	Past fortnight ಗುಜಷ್ತಾ ಪಂಧ್ರಾವಾಡಾ	Corresponding fortnight of last year ಗುಜಷ್ತಾ ಸಾಲ್ ಪೊಕಾಬಿಲಿ ಪಂಧ್ರಾವಾಡಾ	Present fortnight ಸಜಕ್ಕರ್ ಪಂಧ್ರಾವಾಡಾ	Past fortnight ಗುಜಷ್ತಾ ಪಂಧ್ರಾವಾಡಾ	Corresponding fortnight of last year ಗುಜಷ್ತಾ ಸಾಲ್ ಪೊಕಾಬಿಲಿ ಪಂಧ್ರಾವಾಡಾ
	Rs a p	Rs a p	Rs a p	Rs a p	Rs a p	Rs a p	Rs a p	Rs a p	Rs a p	Rs a p	Rs a p	Rs a p	Rs a p	Rs a p	Rs a p
Bangalore	*	*	*	*	*	*	22 13 9	22 13 9	21 10 5	3 maizes for 4 pies	3 maizes for 4 pies.	3 maizes for 4 pies.	41 3 11 *	46 1 7	32 10 5
Kolar ...	*	*	*	*	*	*	26 0 0	26 0 0	22 0 0	*	*	*	44 0 0	44 0 0	40 0 0
Tumkur ...	29 0 0	29 0 0	*	*	*	*	22 0 0	22 0 0	*	*	*	*	48 0 0	48 0 0	*
‡ Mysore...	27 14 2	27 6 10	18 4 6	*	*	*	25 15 4	25 15 4	20 9 1	*	*	*	43 4 10	42 9 9	33 3 9
Hassan ...	*	*	*	*	*	*	25 11 5	20 9 2	20 9 2	*	*	*	51 6 10	45 11 5	41 2 3
Shimoga ...	28 0 3	24 6 10	19 9 4	*	*	*	24 6 10	24 6 10	16 4 10	*	*	*	49 1 0	49 1 0	32 8 0
Kadur ...	22 0 0	22 0 0	16 0 0	*	*	*	25 0 0	25 0 0	16 0 0	*	*	*	50 0 0	50 0 0	27 0 0
Chitaldrug	25 11 5	25 11 5	17 2 4	25 11 5	25 11 5	17 2 4	25 11 5	25 11 5	17 2 4	*	*	*	51 6 10	51 6 10	34 4 7

‡ Column 7—Increase owing to short supply to market. * Article not available. † Column 11—Increase due to harvest being over.

Prices Current [Wholesale] of Food Grains, &c., at the Head-Quarters of the several Districts of the Mysore State during the fortnight ending 31st Mar. 1906—*con*

ಸನ್ 1906ನೆ ಇಸವಿ ಮಾರ್ಚಿ ಮಾಹೇ 31ನೆ ತಾರೀಖಿಗೆ ಆಖೈರಾದ ಪಂಧ್ರಾವಾಡಾ ಬಾಬತು ಒಟ್ಟು ವ್ಯಾಪಾರದ ದುಕಾನಗಳಲ್ಲಿ ಪುರೋಖ್ತ ಆದ ಆಹಾರಜಿನಸಿ ವಗೈರೆ ನಿರಖ.ನಾಮಾ-ಡಿಸ್ಟ್ರಿಕ್ಟ ಹೆಡ್ ಕ್ವಾರ್ಟರ್‌ಗಳ ಬಾಬತು-ಸರ್ಕಾರ

Prices per 10 maunds of $82\frac{2}{7}$ lbs. each ಮಣ 1ಕ್ಕೆ $28\frac{2}{7}$ ಪೌನುಗಳ ಮೇರಿಗೆ 10 ಮಣಕ್ಕೆ ಖರೀದಿ.

District ಡಿಸ್ಟ್ರಿಕ್ಟ	Grains and Pulses ಧಾನ್ಯ ಮತ್ತು ಕಾಳುಗಳು																								Ghee (Clarified butter) ತುಪ್ಪ		
	Horse gram Dolichos biflorus ಹುರಳಿ									Arhar. Cajanus indicus ತೊಗರಿ						Arhar Dal ತೊಗರಿ ಬ್ಯಾಳಿ						Kangani Setaria italica ನವಣೆ								
	12									13						14						15						16		
	Present fortnight ಸಜಿಕ್ಕೂರ್ ಪಂಧ್ರಾವಾಡಾ			Past fortnight ಗುಜಿಷ್ಟಾ ಪಂಧ್ರಾವಾಡಾ			Corresponding fortnight of last year ಗುಜಿಷ್ಟಾ ಸಾಲ್ ಸೊಕಾಬಿಲಾ ಪಂಧ್ರಾವಾಡಾ			Present fortnight ಸಜಿಕ್ಕೂರ್ ಪಂಧ್ರಾವಾಡಾ			Past fortnight ಗುಜಿಷ್ಟಾ ಪಂಧ್ರಾವಾಡಾ			Corresponding fortnight of last year ಗುಜಿಷ್ಟಾ ಸಾಲ್ ಸೊಕಾಬಿಲಾ ಪಂಧ್ರಾವಾಡಾ			Present fortnight ಸಜಿಕ್ಕೂರ್ ಪಂಧ್ರಾವಾಡಾ			Past fortnight ಗುಜಿಷ್ಟಾ ಪಂಧ್ರಾವಾಡಾ			Corresponding fortnight of last year ಗುಜಿಷ್ಟಾ ಸಾಲ್ ಸೊಕಾಬಿಲಾ ಪಂಧ್ರಾವಾಡಾ			Present fortnight ಸಜಿಕ್ಕೂರ್ ಪಂಧ್ರಾವಾಡಾ			Past fortnight ಗುಜಿಷ್ಟಾ ಪಂಧ್ರಾವಾಡಾ			Corresponding fortnight of last year ಗುಜಿಷ್ಟಾ ಸಾಲ್ ಸೊಕಾಬಿಲಾ ಪಂಧ್ರಾವಾಡಾ			Present fortnight ಸಜಿಕ್ಕೂರ್ ಪಂಧ್ರಾವಾಡಾ			Past fortnight ಗುಜಿಷ್ಟಾ ಪಂಧ್ರಾವಾಡಾ			Corresponding fortnight of last year ಗುಜಿಷ್ಟಾ ಸಾಲ್ ಸೊಕಾಬಿಲಾ ಪಂಧ್ರಾವಾಡಾ		
	Rs	a	p	Rs	a	p	Rs	a	p	Rs	a	p	Rs	a	p	Rs	a	p	Rs	a	p	Rs	a	p	Rs	a	p	Rs	a	p	Rs	a	p	Rs	a	p
Bangalore	26	5	4	26	5	4	25	5	1	24	6	1	24	6	1	30	7	7	45	11	5	45	11	5	45	11	5	*			*			*			411	6	10	402	13	8	342	13	8
Kolar ..	29	0	0	29	0	0	26	0	0	*			*			*			44	0	0	50	0	0	50	0	0	*			*			*			400	0	0	400	0	0	400	0	0
Tumkur ...	28	0	0	28	0	0	*			30	0	0	30	0	0	*			48	0	0	48	0	0	*			*			*			*			291	0	0	291	0	0	*		
†Mysore ...	25	9	9	25	9	9	27	11	4	41	2	3	41	2	3	31	5	6	52	1	9	52	1	9	57	9	7	*			*			*			390	12	6	383	6	6	356	0	0
Hassan ...	34	4	7	37	6	5	34	4	7	34	4	7	34	4	7	34	4	7	51	6	10	45	11	5	51	6	10	*			*			*			411	6	10	411	6	10	411	6	10
Shimoga ...	35	8	4	30	2	6	30	2	6	35	8	4	32	8	0	28	0	3	49	1	0	49	1	10	43	12	0	*			*			*			342	14	8	342	14	8	387	7	2
Kadur ...	32	0	0	32	0	0	30	0	0	30	0	0	30	0	0	30	0	0	42	0	0	42	0	0	36	0	0	*			*			*			363	0	0	363	0	0	363	0	0
Chitaldrug	29	6	2	29	6	2	25	11	5	29	6	2	29	6	2	29	6	2	51	6	10	51	6	10	45	11	5	20	9	2	20	9	2	13	11	5	411	6	10	111	6	10	411	6	10

* Article not available.

† Column 16—Increase due to the short supply to the market.

Prices Current [Wholesale] of Food Grains, &c., at the Head-Quarters of the several Districts of the Mysore State during the fortnight ending 31st Mar. 1906—*contd.*

ಸನ್1906ನೆ ಇಸವಿ ಮಾರ್ಚಿ ಮಾಹೆ 31ನೆ ತಾರೀಖಿಗೆ ಆಚೆಯರಾದ ಪಂಧ್ರವಾಡಾ ಬಾಬತು ಒಟ್ಟುವಾ ಬಾರದ ದುಕಾನಗಳಲ್ಲಿ ಪುರೋಖ್ತಾದ ಆಹಾರ ಜಿನಸಿ ವಗೈರೆ ನಿರಖುನಾಮಾ ಡಿಸ್ಟ್ರಿಕ್ಟ ಹೆಡ್‌ಕ್ವಾರ್ಟರ್‌ಗಳ ಬಾಬತು.ಸಂಕ್ಷಿಪ್ತ.

Prices per 10 maunds of 82⅔ lbs. each ಮಣ 1ಕ್ಕೆ 82⅔ ಪೌನುಗಳ ಮೇರಿಗೆ 10 ಮಣಕ್ಕೆ ಖರೀದಿ

District ಡಿಸ್ಟ್ರಿಕ್ಟ	Wheat Flour ಗೋಧಿ ಹಿಟ್ಟು			Sea Salt ಕಲ್ಲುಪ್ಪು			Oil Seeds: Gingelly Sesamum indicum ಎಳ್ಳು			Sugar: Goor or jaggory ಬೆಲ್ಲ			Fibres: Cotton cleaned Gossypium ಅರಳೆ		
	17			18			19			20			21		
	Present fortnight ಪ್ರಜಕಕೊರ್ ಪಂಧ್ರವಾಡಾ	Past fortnight ಗುಜಷ್ಟಾ ಪಂಧ್ರವಾಡಾ	Corresponding fortnight of last year ಗುಜಷ್ಟಾ ಸಾಲ್ ಪ್ರಕಾಬಿಲಾ ಪಂಧ್ರವಾಡಾ	Present fortnight ಪ್ರಜಕಕೊರ್ ಪಂಧ್ರವಾಡಾ	Past fortnight ಗುಜಷ್ಟಾ ಪಂಧ್ರವಾಡಾ	Corresponding fortnight of last year ಗುಜಷ್ಟಾ ಸಾಲ್ ಪ್ರಕಾಬಿಲಾ ಪಂಧ್ರವಾಡಾ	Present fortnight ಪ್ರಜಕಕೊರ್ ಪಂಧ್ರವಾಡಾ	Past fortnight ಗುಜಷ್ಟಾ ಪಂಧ್ರವಾಡಾ	Corresponding fortnight of last year ಗುಜಷ್ಟಾ ಸಾಲ್ ಪ್ರಕಾಬಿಲಾ ಪಂಧ್ರವಾಡಾ	Present fortnight ಪ್ರಜಕಕೊರ್ ಪಂಧ್ರವಾಡಾ	Past fortnight ಗುಜಷ್ಟಾ ಪಂಧ್ರವಾಡಾ	Corresponding fortnight of last year ಗುಜಷ್ಟಾ ಸಾಲ್ ಪ್ರಕಾಬಿಲಾ ಪಂಧ್ರವಾಡಾ	Present fortnight ಪ್ರಜಕಕೊರ್ ಪಂಧ್ರವಾಡಾ	Past fortnight ಗುಜಷ್ಟಾ ಪಂಧ್ರವಾಡಾ	Corresponding fortnight of last year ಗುಜಷ್ಟಾ ಸಾಲ್ ಪ್ರಕಾಬಿಲಾ ಪಂಧ್ರವಾಡಾ
	Rs a p	Rs a p	Rs a p	Rs a p	Rs a p	Rs a p	Rs a p	Rs a p	Rs a p	Rs a p	Rs a p	Rs a p	Rs a p	Rs a p	Rs a p
Bangalore..	56 15 1	56 15 1	56 15 2	26 8 0	26 8 0	32 8 5	72 5 5	67 2 9	58 12 5	49 4 7	49 4 7	64 4 7	205 11 5	205 11 5	205 11 5
Kolar ...	50 0 0	50 0 0	50 0 0	26 0 0	26 0 0	33 0 0	50 0 0	50 0 0	50 0 0	44 0 0	44 0 0	44 0 0	*	*	*
Tumkur ...	*	*	*	28 0 0	28 0 0	*	53 0 0	53 0 0	*	44 0 0	44 0 0	*	*	*	*
†Mysore ...	52 12 9	52 12 9	48 0 0	29 6 2	27 6 1	31 5 6	70 8 5	70 8 5	63 7 2	49 5 11	49 5 11	79 15 11	188 9 11	188 9 11	188 9 1
Hassan ...	68 9 2	68 9 2	68 9 2	34 4 7	34 4 7	41 2 3	51 6 10	45 11 5	51 6 10	68 9 2	51 6 10	68 9 2	171 6 10	171 6 10	171 6 10
Shimoga ...	55 15 5	55 15 6	55 10 10	24 6 10	27 15 6	30 7 6	55 15 5	55 15 5	43 12 0	65 1 8	65 1 8	76 3 4	189 13 0	187 13 0	187 13 10
Kadur ...	64 0 0	64 0 0	64 0 0	27 0 0	27 0 0	31 0 0	50 0 0	50 0 0	36 0 0	72 0 0	72 0 0	72 0 0	303 0 0	303 0 0	303 0 0
Chitaldrug.	51 6 10	51 6 10	45 11 5	41 2 3	41 2 3	41 2 3	51 6 10	51 6 10	34 4 7	51 6 10	51 6 10	51 6 10	137 2 3	137 2 3	137 2 3

* Article not available.

† Column 13—Increase due to the short supply to the market.

Prices Current [Wholesale] of Food Grains, &c., at the Head-Quarters of the several Districts of the Mysore State during the fortnight ending 31st Mar. 1906—*contd.*

ಸನ 1905ನೆ ಇಸವಿ ಮಾರ್ಚ್ ಮಾಹೆ 31ನೆ ತಾರೀಖಿಗೆ ಆಖೈರಾದ ಪಂಧ್ರಾವಾಡಾ ಬಾಬತು ಒಟ್ಟುವ್ಯಾಪಾರದ ದುಕಾನ್‌ಗಳಲ್ಲಿ ಪುರೋಖ್ತ್ ಆದ ಆಹಾರಜಿನಸಿ ವಗೈರೆ ನಿರಖುನಾಮಾ-ಡಿಸ್ಟ್ರಿಕ್ಟ್‌ಹೆಡ್ ಕ್ವಾರ್ಟರ್‌ಗಳ ಬಾಬತು-ಸಂಕ್ಷೇಪ.

Prices per 10 maunds of 82⅔ lbs. each ಮಣ 1ಕ್ಕೆ 82⅔ ಪೌನುಗಳ ಮೇರಿಗೆ ಮಣ 10ಕ್ಕೆ ಖರೀದಿ

District ಡಿಸ್ಟ್ರಿಕ್ಟ	Drugs and Narcotics			Fodder											
	Tobacco leaf Nicotiana tabacum and N. rustica ಹೊಗೆಸೊಪ್ಪು			Grass ಹಸೀ ಹುಲ್ಲು			Straw ಒಣ ಹುಲ್ಲು			Javar stalks ಜೋಳದ ಕಡ್ಡಿ		
	22			23			24			25		
	Present fortnight ಸುಪರ್ತಗೊಂಡ ಪಂಧ್ರಾವಾಡಾ	Past fortnight ಗುಜಷ್ತಾ ಪಂಧ್ರಾವಾಡಾ	Corresponding fortnight of last year ಗುಜಷ್ತಾ ಸಾಲ್ ಸೊಕಾಬಿಲಾ ಪಂಧ್ರಾವಾಡಾ	Present fortnight ಸುಪರ್ತಗೊಂಡ ಪಂಧ್ರಾವಾಡಾ	Past fortnight ಗುಜಷ್ತಾ ಪಂಧ್ರಾವಾಡಾ	Corresponding fortnight of last year ಗುಜಷ್ತಾ ಸಾಲ್ ಸೊಕಾಬಿಲಾ ಪಂಧ್ರಾವಾಡಾ	Present fortnight ಸುಪರ್ತಗೊಂಡ ಪಂಧ್ರಾವಾಡಾ	Past fortnight ಗುಜಷ್ತಾ ಪಂಧ್ರಾವಾಡಾ	Corresponding fortnight of last year ಗುಜಷ್ತಾ ಸಾಲ್ ಸೊಕಾಬಿಲಾ ಪಂಧ್ರಾವಾಡಾ	Present fortnight ಸುಪರ್ತಗೊಂಡ ಪಂಧ್ರಾವಾಡಾ	Past fortnight ಗುಜಷ್ತಾ ಪಂಧ್ರಾವಾಡಾ	Corresponding fortnight of last year ಗುಜಷ್ತಾ ಸಾಲ್ ಸೊಕಾಬಿಲಾ ಪಂಧ್ರಾವಾಡಾ
	Rs a p	Rs a p	Rs a p	Rs a p	Rs a p	Rs a p	Rs a p	Rs a p	Rs a p	Rs a p	Rs a p	Rs a p
Bangalore..	291 6 10	291 6 10	308 9 2	9 2 3	9 2 3	7 9 10	11 6 10	11 6 10	6 13 9	*	*	*
Kolar ...	No wholesale transactions			5 0 0	5 0 0	5 0 0	8 0 0	8 0 0	8 0 0	*	*	*
Tumkur ...	*	*	*	*	*	*	*	*	*	*	*	*
Mysore ...	280 3 3	280 3 3	280 8 3	11 6 4	11 6 4	9 2 3	6 8 2	6 8 2	6 8 2	6 0 0	6 0 0	6 8 0
Hassan ...	171 6 10	171 6 10	171 6 10	1 11 5	1 11 5	1 11 5	3 6 10	3 6 10	3 6 10	*	*	*
Shimoga ...	173 0 4	173 0 4	173 0 4	*	*	*	3 10 4	3 10 4	1 13 2	*	*	*
Kadur ..	303 0 0	303 0 0	303 0 0	*	*	*	22 0 0	22 0 0	22 0 0	*	*	*
Chitaldrug	137 2 3	137 2 3	137 2 3	*	*	*	13 11 5	13 11 5	13 11 5	13 11 5	13 11 5	10 4 7

* Article not available.

Prices Current [Wholesale] of Food Grains, &c., at the Head-Quarters of the several Districts of the Mysore State during the fortnight ending 31st Mar. 1906—*contd.*

ಸನ 1905ನೆ ಇಸವಿ ಮಾರ್ಚಿ ಮಾಹೆ 31ನೆ ತಾರೀಖಿಗೆ ಆಖೈರಾದ ಪಂಧ್ರಾವಾಡಾ ಬಾಬತು ಒಟ್ಟುವ್ಯಾಪಾರದ ದುಕಾನಗಳಲ್ಲಿ ಪುರೋಖ್ತಾದ ಆಹಾರಜಿನಸು ವಗೈರೆ ನಿರಖುನಾಮಾ-ಡಿಸ್ಟ್ರಿಕ್ಟ್‌ಹೆಡ್‌ಕ್ವಾರ್ಟರ್‌ಗಳ ಬಾಬತು-ಸಂಕ್ಷೇಪ.

Prices per 10 maunds of 82⅔ lbs. each ಮಣ 1ಕ್ಕೆ 82⅔ ಪೌನುಗಳ ಮೇರಿಗೆ 10 ಮಣಕ್ಕೆ ಖರೀದಿ

District ಡಿಸ್ಟ್ರಿಕ್ಟ	Garden produce																							
	Turmeric Curcuma longa ಅರಶಿನ									Coffee Coffea arabica ಕಾಫಿ									Cardamom Amomum aromaticum ಯಾಲಕ್ಕಿ									Supari Areca catechu ಅಡಿಕೆ								
	26									27									28									29								
	Present fortnight ಸಂಪ್ರತಿಯ ಪಂಧ್ರಾವಾಡಾ			Past fortnight ಗುಜಷ್ತಾ ಪಂಧ್ರಾವಾಡಾ			Corresponding fortnight of last year ಗುಜಷ್ತಾ ಸಾಲಿ ಸೊಕಾಬಿನ ಪಂಧ್ರಾವಾಡಾ			Present fortnight ಸಂಪ್ರತಿಯ ಪಂಧ್ರಾವಾಡಾ			Past fortnight ಗುಜಷ್ತಾ ಪಂಧ್ರಾವಾಡಾ			Corresponding fortnight of last year ಗುಜಷ್ತಾ ಸಾಲಿ ಸೊಕಾಬಿನ ಪಂಧ್ರಾವಾಡಾ			Present fortnight ಸಂಪ್ರತಿಯ ಪಂಧ್ರಾವಾಡಾ			Past fortnight ಗುಜಷ್ತಾ ಪಂಧ್ರಾವಾಡಾ			Corresponding fortnight of last year ಗುಜಷ್ತಾ ಸಾಲಿ ಸೊಕಾಬಿನ ಪಂಧ್ರಾವಾಡಾ			Present fortnight ಸಂಪ್ರತಿಯ ಪಂಧ್ರಾವಾಡಾ			Past fortnight ಗುಜಷ್ತಾ ಪಂಧ್ರಾವಾಡಾ			Corresponding fortnight of last year ಗುಜಷ್ತಾ ಸಾಲಿ ಸೊಕಾಬಿನ ಪಂಧ್ರಾವಾಡಾ		
	Rs	a	p	Rs	a	p	Rs	a	p	Rs	a	p	Rs	a	p	Rs	a	p	Rs	a	p	Rs	a	p	Rs	a	p	Rs	a	p	Rs	a	p	Rs	a	p
Bangalore	111	6	10	111	6	10	53	9	1	342	13	8	342	13	8	342	13	8	1,371	6	10	1,371	6	10	1,711	6	10	291	6	10	317	2	3	282	13	9
Kolar ..	100	0	0	100	0	0	100	0	0	400	0	0	400	0	0	400	0	0	1,600	0	0	1,600	0	0	1,600	0	0	400	0	0	400	0	0	400	0	0
Tumkur ..	*			*			*			*			*			*			*			*			*			*			*			*		
Mysore ...	109	1	5	109	1	5	81	13	1	286	14	0	286	14	0	312	5	6	1,690	8	4	1,690	8	4	1,690	8	4	308	9	2	308	9	2	342	13	8
Hassan ...	102	13	9	102	13	9	68	9	2	308	9	2	308	9	2	274	4	7	1,028	9	1	1,028	9	1	1,028	9	1	205	11	5	205	11	5	171	6	10
Shimoga ...	113	5	4	113	5	4	98	2	0	250	12	6	250	12	6	346	4	0	1,095	15	0	1,095	15	10	657	8	0	273	15	4	273	15	4	346	4	0
Kadur ...	151	0	0	151	0	0	151	0	0	363	0	0	363	0	0	363	0	0	2,100	0	0	2,200	0	0	2,424	0	0	363	0	0	363	0	0	363	0	0
Chitaldrug	137	2	3	137	2	3	137	2	3	411	6	10	411	6	10	411	6	10	3 291	6	10	3,291	6	10	3,291	6	10	205	11	5	205	11	5	205	11	5

* Article not available.

237

Prices Current [Wholesale] of Food Grains, &c., at the Head-Quarters of the several Districts of the Mysore State during the fortnight ending 31st Mar. 1906—*concld.*

ಸನ್ 1905ನೆ ಇಸವಿ ಮಾರ್ಚಿ ಮಾಹೆ 31ನೆ ತಾರೀಖಿಗೆ ಆಖೈರಾದ ಪಂಧ್ರಾವಾಡಾ ಬಾಬತು ಒಟ್ಟು ವ್ಯಾಪಾರದ ದುಕಾನ್‌ಗಳಲ್ಲಿ ಪುರೋಖ್ತ್‌ ಆದ ಆಹಾರಜಿನಸಿ ವಗೈರೆ ನಿರಖುನಾಮಾ-ಡಿಸ್ಟ್ರಿಕ್ಟ್‌ಹೆಡ್ ಕ್ವಾರ್ಟರ್‌ಗಳ ಬಾಬತುನಮಾಸ್ತಿ.

District ಡಿಸ್ಟ್ರಿಕ್ಟ್	Prices per 10 maunds of 82⅔ lbs. each ಮಣ 1ಕ್ಕೆ 82⅔ ಪೌನುಗಳ ಮೇರಿಗೆ 10 ಮಣಕ್ಕೆ ಖರೀದಿ																	
	Garden produce						Hides (cattle) ದನವಿನ ಚರ್ಮ						Plough bullocks (pair) ಉಳೋಎತ್ತುಗಳು ಜೊತೆ 1ಕ್ಕೆ			Sheep (score) ಕುರಿಗಳು 20ಕ್ಕೆ		
	Dry cocoanut cocos nucifera ಖೊಬರಿ																	
	30						31			32			33					
	Present fortnight ಸಜಪಕ್ಕರ ಪಂಧ್ರಾವಾಡಾ	Past fortnight ಗುಜಷ್ತಾ ಪಂಧ್ರಾವಾಡಾ	Corresponding fortnight of last year ಗುಜಷ್ತಾ ಸಾಲ್ ಸೊಕಾಬಿಲಾ ಪಂಧ್ರಾವಾಡಾ	Present fortnight ಸಜಪಕ್ಕರ ಪಂಧ್ರಾವಾಡಾ	Past fortnight ಗುಜಷ್ತಾ ಪಂಧ್ರಾವಾಡಾ	Corresponding fortnight of last year ಗುಜಷ್ತಾ ಸಾಲ್ ಸೊಕಾಬಿಲಾ ಪಂಧ್ರಾವಾಡಾ	Present fortnight ಸಜಪಕ್ಕರ ಪಂಧ್ರಾವಾಡಾ	Past fortnight ಗುಜಷ್ತಾ ಪಂಧ್ರಾವಾಡಾ	Corresponding fortnight of last year ಗುಜಷ್ತಾ ಸಾಲ್ ಸೊಕಾಬಿಲಾ ಪಂಧ್ರಾವಾಡಾ	Present fortnight ಸಜಪಕ್ಕರ ಪಂಧ್ರಾವಾಡಾ	Past fortnight ಗುಜಷ್ತಾ ಪಂಧ್ರಾವಾಡಾ	Corresponding fortnight of last year ಗುಜಷ್ತಾ ಸಾಲ್ ಸೊಕಾಬಿಲಾ ಪಂಧ್ರಾವಾಡಾ	Present fortnight ಸಜಪಕ್ಕರ ಪಂಧ್ರಾವಾಡಾ	Past fortnight ಗುಜಷ್ತಾ ಪಂಧ್ರಾವಾಡಾ	Corresponding fortnight of last year ಗುಜಷ್ತಾ ಸಾಲ್ ಸೊಕಾಬಿಲಾ ಪಂಧ್ರಾವಾಡಾ
	Rs a p	Rs a p	Rs a p	Rs a p	Rs a p	Rs a p	Rs a p	Rs a p	Rs a p	Rs a p	Rs a p	Rs a p	Rs a p	R a p	Rs a p
Bangalore ..	154 4 7	154 4 7	120 0	437 2 3	437 2 3	437 2 3	120 to 150	120 to 150	120 to 150	160 0 0	160 0 0	160 0 0
Kolar ...	133 0 0	133 0 0	133 0 0	190 0 0	190 0 0	190 0 0	100 0 0	100 0 0	100 0 0	100 0 0	100 0 0	100 0 0
Tumkur ..	*	*	*	*	*	*	25 0 0	25 0 0	*	80 0 0	80 0 0	*
Mysore ...	108 9 1	108 9 1	126 10 8	514 4 6	514 4 6	514 4 6	70 0 0	70 0 0	70 0 0	100 0 0	100 0 0	100 0 0
Hassan ...	164 9 2	164 9 2	171 6 10	164 9 2	164 9 2	164 9 2	30 0 0	30 0 0	30 0 0	100 0 0	100 0 0	100 0 0
Shimoga ...	136 15 8	136 15 8	136 15 8	273 15 4	273 15 4	273 15 4	60 0 0	60 0 0	50 0 0	40 0 0	60 0 0	60 0 0
Kadur ...	193 0 0	193 0 0	193 0 0	2 0 0 per hide.	2 0 0 per hide.	2 0 0 per hide.	40 0 0	40 0 0	40 0 0	60 0 0	60 0 0	60 0 0
Chitaldrug	137 2 3	137 2 3	137 2 3	137 2 3	137 2 3	137 2 3	from 20 to 80 Rs.	from 20 to 80 Rs.	from 20 to 80 Rs	from 80 to 120 Rs. Per	from 80 to 120 Rs. score	from 80 to 120 Rs.

* Article not available.

239

Prices Current [Retail] of Food Grains, &c., at the Head-Quarters of the several Districts of the Mysore State during the fortnight ending 31st Mar. 1906

ಸನ 1905ನೆ ಇಸವಿ ಮಾರ್ಚಿ ಮಾಹೇ 31ನೆ ತಾರೀಖಿಗೆ ಆಬೈರಾದ ಪಂಧ್ರಾವಾಡಾ ಬಾಬತು ಒಟ್ಟು ವ್ಯಾಪಾರದ ಚಿಲ್ಲರೆ ಆಂಗಡಿಗಳಲ್ಲಿ ಪುರೋಖ್ತ್ ಆದ ಆಹಾರಜಿನಸುವಗೈರೆನಿರಖುನಾಮಾಡಿಸ್ಟ್ರಿಕ್ಟ್ ಹೆಡ್ ಕ್ವಾರ್ಟರ್‌ಗಳ ಬಾಬತು.

Quantity per rupee by the standard seer of 80 tolas, *vide* Government of India No. 1—21, dated 10th February 1874

ಸನ 1874ನೆ ಇಸವಿ ಫೆಬ್ರುವರಿ 10ನೆ ಮುರಕೂಂ 1—21ನೆ ನಂಬರು ಇಂಡಿಯಾ ಗವರ್ನಮೆಂಟ್ ಆರ್ಡರ್ ಅನುಸರಿಸಿ ರೂಪಾಯಿ ಒಕ್ಕೆ ೮೦ ತೊಲಾ ತೂಕದ ಬಾಬತು ಶೇರುಗಳು

District ಡಿಸ್ಟ್ರಿಕ್ಟ್	Grains and Pulses ಧಾನ್ಯ ಮತ್ತು ಕಾಳುಗಳು																													
	Rice unhusked (paddy) Oryza sativa ಭತ್ತ						Rice, best sort ಅವಲ್ ತರಹೆ ಅಕ್ಕಿ						Rice, common ಸಾಧಾರಣ ಅಕ್ಕಿ						Wheat Triticum sativum ಹೊಟ್ಟೆ ಗೋಧಿ						Barley Hordeum vulgare ಜವೆ ಗೋಧಿ					
	2						3						4						5						6					
	Present fortnight ಸುಜಕ್ಕರ್ ಪಂಧ್ರಾವಾಡಾ		Past fortnight ಗುಜಷ್ತಾ ಪಂಧ್ರಾವಾಡಾ		Corresponding fortnight of last year ಗುಜಷ್ತಾ ಸಾಲ್ ಪೊಕಾಬಿಲಾ ಪಂಧ್ರಾವಾಡಾ		Present fortnight ಸುಜಕ್ಕರ್ ಪಂಧ್ರಾವಾಡಾ		Past fortnight ಗುಜಷ್ತಾ ಪಂಧ್ರಾವಾಡಾ		Corresponding fortnight of last year ಗುಜಷ್ತಾ ಸಾಲ್ ಪೊಕಾಬಿಲಾ ಪಂಧ್ರಾವಾಡಾ		Present fortnight ಸುಜಕ್ಕರ್ ಪಂಧ್ರಾವಾಡಾ		Past fortnight ಗುಜಷ್ತಾ ಪಂಧ್ರಾವಾಡಾ		Corresponding fortnight of last year ಗುಜಷ್ತಾ ಸಾಲ್ ಪೊಕಾಬಿಲಾ ಪಂಧ್ರಾವಾಡಾ		Present fortnight ಸುಜಕ್ಕರ್ ಪಂಧ್ರಾವಾಡಾ		Past fortnight ಗುಜಷ್ತಾ ಪಂಧ್ರಾವಾಡಾ		Corresponding fortnight of last year ಗುಜಷ್ತಾ ಸಾಲ್ ಪೊಕಾಬಿಲಾ ಪಂಧ್ರಾವಾಡಾ		Present fortnight ಸುಜಕ್ಕರ್ ಪಂಧ್ರಾವಾಡಾ		Past fortnight ಗುಜಷ್ತಾ ಪಂಧ್ರಾವಾಡಾ		Corresponding fortnight of last year ಗುಜಷ್ತಾ ಸಾಲ್ ಪೊಕಾಬಿಲಾ ಪಂಧ್ರಾವಾಡಾ	
	Srs	ch	Srs	ch	Srs	ch	Srs	ch	Srs	ch	Srs	ch	Srs	ch	Srs	ch	Srs	ch	Srs	ch	Srs	ch	Srs	ch	Srs	ch	Srs	ch	Srs	ch
Bangalore ...	16	10	16	10	25	6	7	3	7	3	8	10	8	5	8	5	10	6	10	0	10	14	12	5	*	*	*	*	*	*
Kolar ...	18	0	18	0	20	0	7	0	7	0	8	0	7	8	7	8	9	0	8	0	8	0	10	0	8	0	8	0	10	0
Tumkur ...	18	0	18	0	21	0	6	8	6	8	8	8	8	0	8	0	9	0	7	0	7	0	10	0	7	0	7	0	10	0
Mysore ...	16	12	16	12	18	11	7	0	7	0	9	9	8	4	8	4	10	11	6	4	6	4	11	5	*	*	*	*	*	*
Hassan ...	20	0	20	0	30	0	7	8	8	0	10	0	8	0	9	0	11	0	10	0	8	0	10	0	10	0	8	0	10	0
Shimoga ..	23	2	21	0	25	3	7	6	7	6	8	6	8	6	8	6	11	9	7	6	7	6	12	10	*	*	*	*	*	*
Kadur ..	24	0	25	0	25	0	7	0	7	4	8	0	8	0	9	0	10	0	8	0	8	0	10	0	11	0	11	0	12	0
Chitaldrug ...	16	0	16	0	24	0	7	0	7	0	9	0	8	0	8	0	10	0	8	0	8	0	12	0	8	0	8	0	12	0

* Article not available.

prices Current [Retail] of Food Grains, &c., at the Head-Quarters of the several Districts of the Mysore State during the fortnight ending 31st Mar. 1906—*contd.*

ಸನ 1906ನೆ ಇಸವಿ ಮಾರ್ಚಿ ತಿಂಗಳ 31ನೆ ತಾರೀಖಿಗೆ ಆಖೈರಾದ ಪಂಧ್ರಾವಾಡಾ ಬಾಬತು ಚಿಲ್ಲರೆ ಅಂಗಡಿಗಳಲ್ಲಿ ಪುರೋಹಿತ್ತಾದ ಆಹಾರ ಜಿನಸಿ ವಗೈರೆ ನಿರಖುನಾಮಾ—ಡಿಸ್ಟ್ರಿಕ್ಟ್ ಹೆಡ್ ಕ್ವಾರ್ಟರಗಳ ಬಾಬತು-ಸಕೇಷ.

Quantity per rupee by the standard seer of 80 tolas, &c.—*continued.* ರೂ. 1ಕ್ಕೆ 80 ತೊಲಾ ತೂಕದ ಬಾಬತು ಶೇರುಗಳು—ಸಕೇಷ

District ಡಿಸ್ಟ್ರಿಕ್ಟ	Grains and Pulses ಧಾನ್ಯ ಮತ್ತು ಕಾಳುಗಳು																											
	Cholam or javar Sorghum vulgare ಜೋಳ						Kambu or Bajra Pennisetum typhoideum ಸಜ್ಜೆ						Ragi Eleusine coracana ರಾಗಿ						Maize Zea mays ಮುಸಕಿನ ಜೋಳ						Bengal gram Cicer arietinum ಕಡಲೆ					
	7						8						9						10						11					
	Present fortnight ಪಂಜಕೂರಿ ಪಂಧ್ರಾವಾಡಾ		Past fortnight ಗುಜಷ್ಟಾ ಪಂಧ್ರಾವಾಡಾ		Corresponding fortnight of last year ಗುಜಷ್ಟಾ ಸಾಲ್ ನೊಕಾಬಿಲಾ ಪಂಧ್ರಾವಾಡಾ		Present fortnight ಪಂಜಕೂರಿ ಪಂಧ್ರಾವಾಡಾ		Past fortnight ಗುಜಷ್ಟಾ ಪಂಧ್ರಾವಾಡಾ		Corresponding fortnight of last year ಗುಜಷ್ಟಾ ಸಾಲ್ ನೊಕಾಬಿಲಾ ಪಂಧ್ರಾವಾಡಾ		Present fortnight ಪಂಜಕೂರಿ ಪಂಧ್ರಾವಾಡಾ		Past fortnight ಗುಜಷ್ಟಾ ಪಂಧ್ರಾವಾಡಾ		Corresponding fortnight of last year ಗುಜಷ್ಟಾ ಸಾಲ್ ನೊಕಾಬಿಲಾ ಪಂಧ್ರಾವಾಡಾ		Present fortnight ಪಂಜಕೂರಿ ಪಂಧ್ರಾವಾಡಾ		Past fortnight ಗುಜಷ್ಟಾ ಪಂಧ್ರಾವಾಡಾ		Corresponding fortnight of last year ಗುಜಷ್ಟಾ ಸಾಲ್ ನೊಕಾಬಿಲಾ ಪಂಧ್ರಾವಾಡಾ		Present fortnight ಪಂಜಕೂರಿ ಪಂಧ್ರಾವಾಡಾ		Past fortnight ಗುಜಷ್ಟಾ ಪಂಧ್ರಾವಾಡಾ		Corresponding fortnight of last year ಗುಜಷ್ಟಾ ಸಾಲ್ ನೊಕಾಬಿಲಾ ಪಂಧ್ರಾವಾಡಾ	
	Srs	ch	Srs	ch	Srs	ch	Srs	ch	Srs	ch	Srs	ch	Srs	ch	Srs	ch	Srs	ch	Srs	ch	Srs	ch	Srs	ch	Srs	ch	Srs	ch
Bangalore	*	*	*	*	*	*	*	*	*	*	*	*	17	0	17	0	18	0	3 maizes for pies.	4	3 maizes for pies.	4	3 maizes for pies.	4	9	7	8	6	12	1
Kolar ...	*	*	*	*	*	*	*	*	*	*	*	*	15	0	15	0	18	0	*	*	*	*	*	*	9	0	9	0	10	0
Tumkur ...	16	0	16	0	21	0	*	*	*	*	*	*	18	0	18	0	20	0	*	*	*	*	*	*	9	0	9	0	10	0
Mysore ...	13	0	14	0	22	8	*	*	*	*	*	*	15	0	14	8	20	0	*	*	*	*	*	*	9	0	9	0	12	1
Hassan ...	*	*	*	*	*	*	*	*	*	*	*	*	16	0	17	0	20	0	*	*	*	*	*	*	8	0	8	0	10	0
Shimoga ...	14	11	16	13	21	0	*	*	*	*	*	*	16	13	16	13	25	3	*	*	*	*	*	*	8	6	8	6	12	10
Kadur ...	17	0	17	0	25	0	*	*	*	*	*	*	16	0	16	0	20	0	*	*	*	*	*	*	8	0	8	0	12	0
Chitaldrug	16	0	16	0	24	0	16	0	16	0	24	0	16	0	16	0	24	0	*	*	*	*	*	*	8	0	8	0	12	0

* Article not available.

Prices Current [Retail] of Food Grains, &c., at the Head-Quarters of the several Districts of the Mysore State during the fortnight ending 31st Mar. 1906.—*contd.*
ಸನ 1906ನೆ ಇಸವಿ ಮಾರ್ಚಿ ಮಾಹೇ 31ನೆ ತಾರೀಖಿಗೆ ಆಖೈರಾದ ಪಂಧ್ರಾವಾಡಾ ಬಾಬತು ಚಿಲ್ಲರೆ ಅಂಗಡಿಗಳಲ್ಲಿ ಪೈರೋಖ್ತ್ ಆದ ಆಹಾರ ಜಿನಸಿ ವಗೈರೆ ನಿರಖುನಾಮಾ — ಡಿಸ್ಟ್ರಿಕ್ಟ್ ಹೆಡ್ ಕ್ವಾರ್ಟರ್‌ಗಳ ಬಾಬತು — ಸಕೇಪ.

Quantity per rupee by the standard seer of 80 tolas, &c.—*continued.* ರೂ. 1ಕ್ಕೆ 80 ತೂಲಾ ತೂಕದ ಬಾಬತು ಶೇರುಗಳು — ಸಕೇಪ.

District ಡಿಸ್ಟ್ರಿಕ್ಟ	Grains and Pulses ಧಾನ್ಯ ವತ್ತು ಕಾಳುಗಳು																													
	Horse gram Dolichos biflorus ಹುರಳಿ						Arhar Cajanus indicus ತೊಗರಿ						Arhar Dal ತೊಗರಿ ಬ್ಯಾಳೆ						Kangani Setaria italica ನವಣೆ						Ghee (Clarified butter) ತುಪ್ಪ					
	12						13						14						15						16					
	Present fortnight ಪಂಜಕ್ಕೂರಿ ಪಂಧ್ರಾವಾಡಾ		Past fortnight ಗುಜಷ್ಟಾ ಪಂಧ್ರಾವಾಡಾ		Corresponding fortnight of last year ಗುಜಷ್ಟಾ ಸಾಲಿ ಪೊಕಾಬಿಲಾ ಪಂಧ್ರಾವಾಡಾ		Present fortnight ಪಂಜಕ್ಕೂರಿ ಪಂಧ್ರಾವಾಡಾ		Past fortnight ಗುಜಷ್ಟಾ ಪಂಧ್ರಾವಾಡಾ		Corresponding fortnight of last year ಗುಜಷ್ಟಾ ಸಾಲಿ ಪೊಕಾಬಿಲಾ ಪಂಧ್ರಾವಾಡಾ		Present fortnight ಪಂಜಕ್ಕೂರಿ ಪಂಧ್ರಾವಾಡಾ		Past fortnight ಗುಜಷ್ಟಾ ಪಂಧ್ರಾವಾಡಾ		Corresponding fortnight of last year ಗುಜಷ್ಟಾ ಸಾಲಿ ಪೊಕಾಬಿಲಾ ಪಂಧ್ರಾವಾಡಾ		Present fortnight ಪಂಜಕ್ಕೂರಿ ಪಂಧ್ರಾವಾಡಾ		Past fortnight ಗುಜಷ್ಟಾ ಪಂಧ್ರಾವಾಡಾ		Corresponding fortnight of last year ಗುಜಷ್ಟಾ ಸಾಲಿ ಪೊಕಾಬಿಲಾ ಪಂಧ್ರಾವಾಡಾ		Present fortnight ಪಂಜಕ್ಕೂರಿ ಪಂಧ್ರಾವಾಡಾ		Past fortnight ಗುಜಷ್ಟಾ ಪಂಧ್ರಾವಾಡಾ		Corresponding fortnight of last year ಗುಜಷ್ಟಾ ಸಾಲಿ ಪೊಕಾಬಿಲಾ ಪಂಧ್ರಾವಾಡಾ	
	Srs	ch	Srs	ch	Srs	ch	Srs	ch	Srs	ch	Srs	ch	Srs	ch	Srs	ch	Srs	ch	Srs	ch	Srs	ch	Srs	ch	Srs	ch	Srs	ch	Srs	ch
Bangalore	15	0	15	0	15	10	16	5	15	5	12	15	8	8	8	8	8	8	*	*	*	*	*	*	0	15	1	0	1	2
Kolar ..	14	0	14	0	15	0	*	*	*	*	*	*	9	0	8	0	8	0	*	*	*	*	*	*	1	0	1	0	1	0
Tumkur ..	14	0	14	0	13	8	12	0	12	0	13	8	8	0	8	0	8	0	*	*	*	*	*	*	1	0	1	0	1	0
Mysore ..	13	0	13	12	15	5	13	0	14	8	13	2	10	8	10	8	7	2	*	*	*	*	*	*	3	4	3	8	1	3
Hassan ..	12	0	11	0	12	0	12	0	12	0	12	0	8	0	9	0	8	0	*	*	*	*	*	*	1	0	1	0	1	0
Shimoga ..	11	9	13	10	13	10	11	9	12	10	14	11	8	6	8	6	9	7	*	*	*	*	*	*	1	3	1	3	1	1
Kadar ..	11	0	11	0	12	0	12	0	12	0	12	0	9	0	9	0	10	0	*	*	*	*	*	*	1	3	1	3	1	3
Chitaldrug	14	0	14	0	16	0	14	0	14	0	14	0	8	0	8	0	9	0	20	0	20	0	30	0	1	0	1	0	1	0

Article not available.

Prices Current [Retail] of Food Grains, &c., at the Head-Quarters of the several Districts of the Mysore State during the fortnight ending 31st Mar. 1906—*contd.*
ಸನ 1906ನೆ ಇಸವಿ ಮಾರ್ಚಿ ಮಾಹೆ 31ನೆ ತಾರೀಖಿಗೆ ಅಖೈರಾದ ಪಂಧ್ರಾವಾಡಾ ಬಾಬತು ಜಿಲ್ಲೆರ ಅಂಗಡಿಗಳಲ್ಲಿ ಫುರೋಖ್ತ್ ಆದ ಆಹಾರಜಿನಸಿ ವಗೈರೆ ನಿರಖುನಾಮಾ— ಡಿಸ್ಟ್ರಿಕ್ಟ್ ಹೆಡ್ ಕ್ವಾರ್ಟರ್‌ಗಳ ಬಾಬತು-ಸಶೇಷ.

Quantity per rupee by the standard seer of 80 tolas, &c.—*continued.* ರೂ. 1ಕ್ಕೆ 80 ತೊಲಾ ತೂಕದ ಬಾಬತು ಶೇರುಗಳು—ಸಶೇಷ.

District ಡಿಸ್ಟ್ರಿಕ್ಟ	Wheat Flour ಗೋಧಿ ಹಿಟ್ಟು 17						Sea Salt ಕಲ್ಲುಪ್ಪು 18						Oil Seeds: Gingelly Sesamum indicum ಎಳ್ಳು 19						Sugar: Goor or jaggory ಬೆಲ್ಲ 20						Fibres: Cotton cleaned Gossypium ಅರಳೆ 21					
	Present fortnight ಸಜಪಕ್ಕರ್ ಪಂಧ್ರಾವಾಡಾ		Past fortnight ಗುಜಷ್ತಾ ಪಂಧ್ರಾವಾಡಾ		Corresponding fortnight of last year ಗುಜಷ್ತಾ ಸಾಲ್ ಪೆಕ್ಕಾಬಿಲಾ ಪಂಧ್ರಾವಾಡಾ		Present fortnight ಸಜಪಕ್ಕರ್ ಪಂಧ್ರಾವಾಡಾ		Past fortnight ಗುಜಷ್ತಾ ಪಂಧ್ರಾವಾಡಾ		Corresponding fortnight of last year ಗುಜಷ್ತಾ ಸಾಲ್ ಪೆಕ್ಕಾಬಿಲಾ ಪಂಧ್ರಾವಾಡಾ		Present fortnight ಸಜಪಕ್ಕರ್ ಪಂಧ್ರಾವಾಡಾ		Past fortnight ಗುಜಷ್ತಾ ಪಂಧ್ರಾವಾಡಾ		Corresponding fortnight of last year ಗುಜಷ್ತಾ ಸಾಲ್ ಪೆಕ್ಕಾಬಿಲಾ ಪಂಧ್ರಾವಾಡಾ		Present fortnight ಸಜಪಕ್ಕರ್ ಪಂಧ್ರಾವಾಡಾ		Past fortnight ಗುಜಷ್ತಾ ಪಂಧ್ರಾವಾಡಾ		Corresponding fortnight of last year ಗುಜಷ್ತಾ ಸಾಲ್ ಪೆಕ್ಕಾಬಿಲಾ ಪಂಧ್ರಾವಾಡಾ		Present fortnight ಸಜಪಕ್ಕರ್ ಪಂಧ್ರಾವಾಡಾ		Past fortnight ಗುಜಷ್ತಾ ಪಂಧ್ರಾವಾಡಾ		Corresponding fortnight of last year ಗುಜಷ್ತಾ ಸಾಲ್ ಪೆಕ್ಕಾಬಿಲಾ ಪಂಧ್ರಾವಾಡಾ	
	Srs	ch	Srs	ch	Srs	ch	Srs	ch	Srs	ch	Srs	ch	Srs	ch	Srs	ch	Srs	ch	Srs	ch	Srs	ch	Srs	ch	Srs	ch	Srs	ch	Srs	ch
Bangalore	6	12	6	12	7	5	14	15	14	15	11	8	5	4	5	11	6	9	8	0	8	0	6	0	1	14	1	14	1	14
Kolar ...	*	0	8	0	8	0	15	0	15	0	12	0	8	0	8	0	8	0	9	0	9	0	9	0	*	*	*	*	*	*
Tumkur ..	7	0	7	0	8	0	13	0	13	0	12	0	8	0	8	0	8	0	4	0	4	0	4	0	2	0	2	0	2	0
Mysore ...	9	0	9	0	7	4	13	0	14	0	13	2	6	4	6	4	6	9	†21	0	†21	0	5	4	7	8	7	8	2	4
Hassan ..	6	0	6	0	6	0	12	0	12	0	10	0	8	0	9	0	8	0	6	0	8	0	6	0	2	6	2	6	2	6
Shimoga ...	7	3	7	6	7	6	16	13	14	11	13	10	7	6	7	6	9	7	6	5	6	5	5	6	2	3	2	3	2	3
Kadur ...	6	0	6	0	6	0	14	0	14	0	12	0	8	0	8	0	10	0	5	4	5	4	5	4	1	5	1	5	1	5
Chitaldrug	8	0	8	0	9	0	10	0	10	0	10	0	8	0	8	0	12	0	8	0	8	0	8	0	3	0	3	0	3	0

* Article not available.

†Apparently wrong. Deputy Commissioner's explanation called for.

242

Prices Current [Retail] of Food Grains, &c., at the Head-Quarters of the several Districts of the Mysore State during the fortnight ending 31st Mar. 1906 - *contd.*

ಸನ 1906ನ ಇಸವಿ ಮಾರ್ಚಿ ಮಾಹೇ 31 ನೆ ತಾರೀಖಿಗೆ ಆಖೈರಾದ ಪಂಧ್ರಾವಾಡಾ ಬಾಬತು ಚಿಲ್ಲರೆ ಅಂಗಡಿಗಳಲ್ಲಿ ಪುರೋಭಾಗ ಆದ ಆಹಾರ ಜಿನಸಿ ವಗೈರೆ ನಿರಖುನಾಮಾ — ಡಿಸ್ಟ್ರಿಕ್ಟ ಹೆಡ್ ಕ್ವಾರ್ಟರಿಗಳ ಬಾಬತ್—ಸಕೀಪ.

Quantity per rupee by the standard seer of 80 tolas, &c.—*continued.* ರೂ. 1ಕ್ಕೆ 80 ತೊಲಾ ತೂಕದ ಬಾಬತು ಶೇರುಗಳು — ಸಕೀಪ.

District ಡಿಸ್ಟ್ರಿಕ್ಟ	Drugs and Narcotics: Tobacco leaf Nicotiana tabacum and N. rustica ಹೊಗೆಸೊಪ್ಪು (22)						Fodder: Grass ಹಸೀ ಹುಲ್ಲು (23)						Fodder: Straw ವಣಹುಲ್ಲು (24)						Fodder: Javar stalks ಜೋಳದ ಕಡ್ಡಿ (25)						Garden produce: Turmeric Curcuma longa ಅರಿಶಿನ (26)						Garden produce: Coffee Coffea arabica ಕಾಫಿ (27)					
	Present fortnight ಪುಜಕ್ಕರೆ ಪಂಧ್ರಾವಾಡಾ		Past fortnight ಗುಜಷ್ಟಾ ಪಂಧ್ರಾವಾಡಾ		Corresponding fortnight of last year ಗುಜಷ್ಟಾ ಸಾಲ್ ಪೆಕಾಬಿಲಾ ಪಂಧ್ರಾವಾಡಾ		Present fortnight ಪುಜಕ್ಕರೆ ಪಂಧ್ರಾವಾಡಾ		Past fortnight ಗುಜಷ್ಟಾ ಪಂಧ್ರಾವಾಡಾ		Corresponding fortnight of last year ಗುಜಷ್ಟಾ ಸಾಲ್ ಪೆಕಾಬಿಲಾ ಪಂಧ್ರಾವಾಡಾ		Present fortnight ಪುಜಕ್ಕರೆ ಪಂಧ್ರಾವಾಡಾ		Past fortnight ಗುಜಷ್ಟಾ ಪಂಧ್ರಾವಾಡಾ		Corresponding fortnight of last year ಗುಜಷ್ಟಾ ಸಾಲ್ ಪೆಕಾಬಿಲಾ ಪಂಧ್ರಾವಾಡಾ		Present fortnight ಪುಜಕ್ಕರೆ ಪಂಧ್ರಾವಾಡಾ		Past fortnight ಗುಜಷ್ಟಾ ಪಂಧ್ರಾವಾಡಾ		Corresponding fortnight of last year ಗುಜಷ್ಟಾ ಸಾಲ್ ಪೆಕಾಬಿಲಾ ಪಂಧ್ರಾವಾಡಾ		Present fortnight ಪುಜಕ್ಕರೆ ಪಂಧ್ರಾವಾಡಾ		Past fortnight ಗುಜಷ್ಟಾ ಪಂಧ್ರಾವಾಡಾ		Corresponding fortnight of last year ಗುಜಷ್ಟಾ ಸಾಲ್ ಪೆಕಾಬಿಲಾ ಪಂಧ್ರಾವಾಡಾ		Present fortnight ಪುಜಕ್ಕರೆ ಪಂಧ್ರಾವಾಡಾ		Past fortnight ಗುಜಷ್ಟಾ ಪಂಧ್ರಾವಾಡಾ		Corresponding fortnight of last year ಗುಜಷ್ಟಾ ಸಾಲ್ ಪೆಕಾಬಿಲಾ ಪಂಧ್ರಾವಾಡಾ	
	Srs	ch	Srs	ch	Srs	ch	Srs	ch	Srs	ch	Srs	ch	Srs	ch	Srs	ch	Srs	ch	Srs	ch	Srs	ch	Srs	ch	Srs	ch	Srs	ch	Srs	ch	Srs	ch	Srs	ch	Srs	ch
Bangalore ...	1	5	1	5	1	4	45	0	45	0	54	0	36	0	36	0	60	0							3	6		6	7	6	1	2	1	2	1	2
Kolar ...	2	8	2	8	2	8	75	0	75	0	75	0	50	0	50	0	50	0	*	*	*	*	*	*	4	0	4	0	4	0	1	0	1	0	1	0
Tumkur ...	2	6	2	6	1	8	80	0	80	0	80	0	32	0	32	0	32	0	*	*	*	*	*	*	4	0	4	0	4	0	1	0	1	0	1	0
Mysore ...	3	12	3	12	1	3	120	0	120	0	100	0	140	0	140	0	170	0	110	0	110	0	104	0	12	0	12	0	5	4	5	0	5	0	1	2
Hassan ...	2	6	2	6	2	6	240	0	240	0	240	0	120	0	120	0	120	0	*	*	*	*	*	*	4	0	4	0	6	0	1	5	1	5	1	8
Shimoga ...	2	6	2	6	2	6	*	*	*	*	*	*	112	0	112	0	224	0	*	*	*	*	*	*	3	10	3	10	4	3	1	10	1	10	1	3
Kadur ..	1	5	1	5	1	5	*	*	*	*	*	*	17	9	17	9	17	9	*	*	*	*	*	*	2	10	2	10	2	10	1	3	1	3	1	3
Chitaldrug ..	3	0	3	0	3	0	*	*	*	*	*	*	30	0	30	0	30	0	30	0	30	0	40	0	3	0	3	0	3	0	1	0	1	0	1	0

* Article not available.

Prices Current [Retail] of Food Grains, &c., at the Head-Quarters of the several Districts of the Mysore State during the fortnight ending 31st Mar. 1906—*concld.*

ಸನ 1905ನೆ ಇಸವಿ ಮಾರ್ಚಿ ಮಾಹೆ 15ನ ತಾರೀಖಿಗೆ ಅಯ್ಯೆರಾದ ಪಂಧ್ರಾವಾಡಾ ಬಾಬತು ಜಿಲ್ಲೆರ ಅಂಗಡಿಗಳಲ್ಲಿ ಸರೋಖ್ತ ಆದ ಆಹಾರಜಿನಸಿ ವಗೈರೆ ನಿರಖುನಾಮಾ— ಡಿಸ್ಟ್ರಿಕ್ಟ ಹೆಡ್ ಕ್ವಾರ್ಟರಿಗಳ ಬಾಬತು-ಸಮಾಪ್ತಿ.

District ಡಿಸ್ಟ್ರಿಕ್ಟ	Quantity per rupee by the standard seer of 80 tolas, &c.—*concluded* ರೂ. 1ಕ್ಕೆ 80 ತೊಲಾ ತೂಕದ ಬಾಬತು ಶೇರುಗಳು —ಸಮಾಪ್ತಿ																																			
	Garden produce.																																			
	Cardamom Amomum Aromaticum ಯಾಲಕ್ಕಿ						Supari Areca catechu ಅಡಿಕೆ						Dry cocoanut Cocos nucifera ಖೊಬರಿ						Hides (cattle) ದನವಿನ ಚರ್ಮ						Plough bullocks (pair) ಉಳೋ ಎತ್ತುಗಳು ಜೊತೆ 1ಕ್ಕೆ			Sheep (score) ಕುರಿಗಳು 20ಕ್ಕೆ		
	28						29						30						31						32			33		
	Present fortnight ಸಜಕ್ಕರೆ ಪಂಧ್ರಾವಾಡಾ		Past fortnight ಗುಜಷ್ಟಾ ಪಂಧ್ರಾವಾಡಾ		Corresponding fortnight of last year ಗುಜಷ್ಟಾ ಸಾಲ್ ನೊಕಾಬಿಲಾ ಪಂಧ್ರಾವಾಡಾ		Present fortnight ಸಜಕ್ಕರೆ ಪಂಧ್ರಾವಾಡಾ		Past fortnight ಗುಜಷ್ಟಾ ಪಂಧ್ರಾವಾಡಾ		Corresponding fortnight of last year ಗುಜಷ್ಟಾ ಸಾಲ್ ನೊಕಾಬಿಲಾ ಪಂಧ್ರಾವಾಡಾ		Present fortnight ಸಜಕ್ಕರೆ ಪಂಧ್ರಾವಾಡಾ		Past fortnight ಗುಜಷ್ಟಾ ಪಂಧ್ರಾವಾಡಾ		Corresponding fortnight of last year ಗುಜಷ್ಟಾ ಸಾಲ್ ನೊಕಾಬಿಲಾ ಪಂಧ್ರಾವಾಡಾ		Present fortnight ಸಜಕ್ಕರೆ ಪಂಧ್ರಾವಾಡಾ		Past fortnight ಗುಜಷ್ಟಾ ಪಂಧ್ರಾವಾಡಾ		Corresponding fortnight of last year ಗುಜಷ್ಟಾ ಸಾಲ್ ನೊಕಾಬಿಲಾ ಪಂಧ್ರಾವಾಡಾ		Present fortnight ಸಜಕ್ಕರೆ ಪಂಧ್ರಾವಾಡಾ	Past fortnight ಗುಜಷ್ಟಾ ಪಂಧ್ರಾವಾಡಾ	Corresponding fortnight of last year ಗುಜಷ್ಟಾ ಸಾಲ್ ನೊಕಾಬಿಲಾ ಪಂಧ್ರಾವಾಡಾ	Present fortnight ಸಜಕ್ಕರೆ ಪಂಧ್ರಾವಾಡಾ	Past fortnight ಗುಜಷ್ಟಾ ಪಂಧ್ರಾವಾಡಾ	Corresponding fortnight of last year ಗುಜಷ್ಟಾ ಸಾಲ್ ನೊಕಾಬಿಲಾ ಪಂಧ್ರಾವಾಡಾ
	Srs	ch	Srs	ch	Srs	ch	Srs	ch	Srs	ch	Srs	ch	Srs	ch	Srs	ch	Srs	ch	Srs	ch	Srs	ch	Srs	ch	Rs a p	Rs a p	Rs a p	Rs a p	Rs a p	Rs a p
Bangalore .	0	4	0	4	0	3	1	5	1	4	1	6	2	6	2	6	3	3	0	15	0	15	0	15	120 to 150	120 to 150	120 to 150	160 0 0	160 0 0	160 0 0
Kolar ...	0	4	0	4	0	4	1	0	1	0	1	0	3	0	3		3	0	2	0	2	0	2	0	100 0 0	100 0 0	100 0 0	100 0 0	100 0 0	100 0 0
Tumkur ...	0	2	0	2	0	2	1	4	1	4	1	4	3	0	3	0	2	8	1	0	1	0	1	0	40 0 0	40 0 0	40 0 0	100 0 0	100 0 0	80 0 0
Mysore ...	2	0	2	0	0	5	4	4	4	4	1	9	14	0	14	0	1	14	0	10	0	10	0	10	70 0 0	70 0 0	70 0 0	100 0 0	100 0 0	100 0 0
Hassan ...	0	6	0	6	0	6	2	0	2	0	2	6	2	8	2	8	2	6	2	8	2	8	2	8	30 0 0	30 0 0	30 0 0	100 0 0	100 0 0	100 0 0
Shimoga ...	0	6	0	6	0	10	1	8	1	8	1	3	3	0	3	0	3	0	1	8	1	8	1	8	60 0 0	60 0 0	50 0 0	40 0 0	60 0 0	60 0 0
Kadur ...	0	6	0	5	0	3	1	3	1	3	1	1	2	1	2	1	2	1	Rs a p 2 0 0		Rs a p 2 0 0 per hide		Rs a p 2 0 0		40 0 0	40 0 0	40 0 0	60 0 0	60 0 0	60 0 0
Chitaldrug	0	1/8	0	1/8	0	1/8	2	0	2	0	2	0	3	0	3	0	3	0	3	0	3	0	3	0	From 20 to 80 Rs.	From 20 to 80 Rs.	From 20 to 80 Rs.	From 80 to 120 Rs.	From 80 to 120 Rs.	From 80 to 120 Rs.

By Order,
B. K. VENKATA VARADA IYENGAR,
Secy. to Govt., Gen. & Rev. Dept.

2145

Prices-Current (*Retail*) of Food Grains and Salt in the Mysore State during the fortnight ending the 31st March 1906.

Quantity per rupee in seer of 80 tolas, *vide* Government of India No. 1—21, dated 10th February 1874.

Fortnight ending.	No.	District.	Wheat.						Barley.						Rice, best sort.						Rice, common.						Javar or cholam (*Sorghum valgare*).						Bajra or kambu (*Pennisetum typhoideum.*)						Marua or ragi (*Eleusine Corocana.*)					
			Present return.		Next preceding return.		Corresponding return of last year.		Present return.		Next preceding return.		Corresponding return of last year.		Present return.		Next preceding return.		Corresponding return of last year.		Present return.		Next preceding return.		Corresponding return of last year.		Present return.		Next preceding return.		Corresponding return of last year.		Present return.		Next preceding return.		Corresponding return of last year.		Present return.		Next preceding return.		Corresponding return of last year.	
	1	2	3		4		5		6		7		8		9		10		11		12		13		14		15		16		17		18		19		20		21		22		23	
			S.	c.	S.	c.	S.	c.	S.	c.	S.	c.	S.	c.	S.	c.	S.	c.	S.	c.	S.	c.	S.	c.	S.	c.	S.	c.	S.	c.	S.	c.	S.	c.	S.	c.	S.	c.	S.	c.	S.	c.	S.	c.
31st March 1906.	1	Bangalore.	10	0	10	14	12	5	*	*	*	*	*	*	7	3	7	3	8	10	8	5	8	5	10	6	*	*	*	*	*	*	*	*	*	*	*	*	17	0	17	0	18	0
	2	Kolar ...	8	0	8	0	10	0	8	0	8	0	10	0	7	0	7	0	8	0	7	8	7	8	9	0	*	*	*	*	*	*	*	*	*	*	*	*	15	0	15	0	18	0
	3	Tumkur ...	7	0	7	0	10	0	7	0	7	0	10	0	6	8	6	8	8	8	8	0	8	0	9	0	16	0	16	0	21	0	*	*	*	*	*	*	18	0	18	0	20	0
	4	Mysore ...	6	4	6	4	11	5	*	*	*	*	*	*	7	0	7	0	9	9	8	4	8	4	10	11	13	0	14	0	22	8	*	*	*	*	*	*	15	0	14	8	20	0
	5	Hassan ...	10	0	8	0	10	0	10	0	8	0	10	0	7	8	8	0	10	0	8	0	9	0	11	0	*	*	*	*	*	*	*	*	*	*	*	*	16	0	17	0	20	0
	6	Shimoga...	7	6	7	6	12	10	*	*	*	*	*	*	7	6	7	6	8	6	8	6	8	6	11	9	14	11	16	13	21	0	*	*	*	*	*	*	16	13	16	13	25	3
	7	Kadur ...	8	0	8	0	10	0	11	0	11	0	12	0	7	0	7	4	8	0	8	0	9	0	10	0	17	0	17	0	25	0	*	*	*	*	*	*	16	0	16	0	20	0
	8	Chitaldrug	8	0	8	0	12	0	8	0	8	0	12	0	7	0	7	0	9	0	8	0	8	0	10	0	16	0	16	0	24	0	16	0	16	0	24	0	16	0	16	0	24	0
		Average ..	8	1	7	15	11	0	8	13	8	6	10	0	7	1	7	3	8	12	8	1	8	5	10	3	15	5	15	15	22	11	16	0	16	0	24	0	16	4	16	5	20	10

* Article not available.

Prices-Current (*Retail*) of Food Grains and Salt in the Mysore State during the fortnight ending the 31st March 1906—*concluded*.

Quantity per rupee in seer of 80 tolas, *vide* Government of India No. 1—21, dated 10th February 1874.

Fortnight ending.	No.	District	Kangni or kakum Italian millet (*Setaria Italica.*)						Gram, chonna, chola, kadale or sunage (*Circor Arietinum.*)						Indian-corn or maize (*Zea Mays.*)						Arhar or Thur-cadjan pea (*Cajanus Indicus.*)						Arhar Dal.						Salt.						Remarks
			Present return.		Next preceding return.		Corresponding return of last year.		Present return.		Next preceding return.		Corresponding return of last year.		Present return.		Next preceding return.		Corresponding return of last year.		Present return.		Next preceding return.		Corresponding return of last year.		Present return.		Next preceding return.		Corresponding return of last year.		Present return.		Next preceding return.		Corresponding return of last year.		
			24		25		26		27		28		29		30		31		32		33		34		35		36		37		38		39		40		41		42
			S.	c.	S.	c.	S.	c.	S.	c.	S.	c.	S.	c.	S.	c.	S.	c.	S.	c.	S.	c.	S.	c.	S.	c.	S.	c	S.	c.	S.	c.	S.	c.	S.	c.	S.	c.	
31st March 1906.	1	Bangalore	*	*	*	*	*	*	9	7	8	6	12	1	3 maizes for 4 pies.		3 maizes for 4 pies.		3 maizes for 4 pies.		16	5	16	5	12	15	8	8	8	8	8	8	14	15	14	15	11	8	
	2	Kolar ...	*	*	*	*	*	*	9	0	9	0	10	0	*	*	*	*	*	*	*	*	*	*	*	*	9	0	8	0	8	0	15	0	15	0	12	0	
	3	Tumkur ..	*	*	*	*	*	*	9	0	9	0	10	0	*	*	*	*	*	*	12	0	12	0	13	8	8	0	8	0	8	0	13	0	13	0	12	0	
	4	Mysore ...	*	*	*	*	*	*	9	0	9	0	12	1	*	*	*	*	*	*	13	0	14	0	13	2	10	8	10	8	7	2	13	0	14	0	13	2	
	5	Hassan ..	*	*	*	*	*	*	8	0	8	0	10	0	*	*	*	*	*	*	12	0	12	0	12	0	8	0	9	0	8	0	12	0	12	0	10	0	
	6	Shimoga ..	*	*	*	*	*	*	8	6	8	6	12	10	*	*	*	*	*	*	11	9	12	10	14	11	8	6	8	6	9	7	16	13	14	11	13	10	
	7	Kadur ...	*	*	*	*	*	*	8	0	8	0	12	0	*	*	*	*	*	*	12	0	12	0	12	0	9	0	9	0	10	0	14	0	14	0	12	0	
	8	Chitaldrug	20	0	20	0	30	0	8	0	8	0	12	0	*	*	*	*	*	*	14	0	14	0	14	0	8	0	8	0	9	0	10	0	10	0	10	0	
		Average...	20	0	20	0	30	0	8	10	8	7	11	5	3 maizes for 4 pies.		3 maizes for 4 pies.		3 maizes for 4 pies.		13	0	13	4	13	3	8	11	8	10	8	8	13	9	13	7	11	12	

* Article not available.

GOVT. OF H. H. THE MAHARAJA OF MYSORE, GENL. AND REV. SECRETARIAT,
Dated Bangalore, the 10th April 1906.

By Order,
B. K. VENKATA VARADA IYENGAR,
Secy. to Govt., Gen. & Rev. Dept.

READ—Annual Report for the year 1904-05, submitted by the Agricultural Chemist to the Government of His Highness the Maharaja of Mysore, with his letter No. 674, dated the 4th December 1905.

No. R. 10787-96—AGRI. 76-05-5, DATED BANGALORE, 17TH FEBRUARY 1906.

ORDER THEREON.—Dr. Lehmann having returned from his furlough in October 1904, the working of the Department was in his hands during the greater part of the official year 1904-05.

2. The work done consisted mainly of plot experiments, analysis of agricultural products, such as, coffee, famine food, and of fertilizers, elaborate investigation into improved methods of sugar manufacture and the imparting of information and advice regarding agricultural matters to the public. This last portion of the Agricultural Chemist's work is said to be steadily increasing, thus indicating a gradual awakening on the part of those engaged in agriculture to the advantages of expert guidance and scientific knowledge.

3. An Agricultural Farm at Hebbal in close proximity to Bangalore was opened during the year, and the necessary buildings are approaching completion. The Agricultural Chemist has made arrangements to therein conduct experiments on a more extensive scale for the purpose of studying the various factors upon which agricultural produce depends, with special reference to the influence exerted by the qualities of the soil, manures, agricultural implements, the mode in which the soil is prepared for agricultural operations and the most advantageous methods of realizing the produce. It is too sanguine to expect valuable results within a short period of time; for the conditions of experiments shall have to be varied as much as possible and the results tested by an extensive series of observations with a view to lessening the influence of unknown causes which constantly vitiate the conclusions arrived at. The Government believe that if the continuity of such experiments is kept in view and careful tabulation of the results made, the Agricultural Chemist will be able to make important contributions to agricultural knowledge.

4. For the purpose of obtaining a greater uniformity in the conditions under which agricultural experiments are carried on, a pot-culture house has been constructed. This is said to be the first contrivance of the kind on an improved scale in India, and Government trust that with the facilities now available, progress in agricultural investigation will be more marked in future.

5. As the sugar locally produced, in spite of the exceptional richness of the sugar-cane used in its manufacture, is not able to maintain its position in the market in competition with imported sugar, the Agricultural Chemist has been devoting special attention to the improvement of the industry. As its unfavourable position is due to defective methods of production, Government have read with great interest the elaborate experiments conducted by the Agricultural Chemist as to the most suitable time for cutting the sugar-cane, the interval within which it should be milled, the boiling and treatment of the juice and the best way of clarifying it. There is no doubt that the cost of production will be materially reduced if the waste of a large quantity of the juice which remains unextracted owing to the crude nature of the mills employed, can be prevented. What is, therefore, urgently required is a cheap and efficient mill. The majority of the consumers being satisfied with jaggory, it is doubtful if the practice of each producer converting the sugar-cane raised by him into jaggory will decrease to any material extent. The use of large mills will be confined, at any rate for some time to come, to such wealthy producers and manufacturers as may carry on the operations on a large scale. The enterprise of the Inamdar of Gorgally, however, who has obtained a loan of Rs. 2,500 from Government to get an improved sugar-cane mill, is commendable, and the Government trust that his example will be widely followed, when the undoubted advantages of adopting improved machinery become manifest by the success of the new mill. The Agricultural Chemist has collected information of great commercial value, and Government hope that the sugar industry will materially benefit by it. It will be useful if this information is embodied in a bulletin and issued for the information of the public with Kannada translation.

6. The experiments conducted by individual planters as to the value of manures in the production of coffee have not led to any conclusive results. Government have recently assisted the planters of the Hassan and Kadur Districts in acquiring suitable lands for a coffee experimental farm in the Belur Taluk on favourable terms, and Government trust that the extended observations to be carried on therein will throw more light on the subject and serve to minimise the cost of production either by demonstrating the inutility of excessive manuring or the precise method of increasing the output. Considering the state of the coffee market, Government agree that anything calculated to help planters to increase their profit, will be of great value to a somewhat languishing industry, and Government desire Dr. Lehmann to heartily co-operat with them in carrying on their experiments.

7. The report contains a great deal of useful information as to the composition of manures and Government note with satisfaction the increasing tendency to obtain guarantees of composition both on the part of merchants and agriculturists. The special attention which has been

paid by the Agricultural Chemist to the possibility of using, as manure, some of the waste products in sugar and other manufactories, and the processes to which they should be subjected beforehand, will, it is hoped, lead to results of considerable commercial and agricultural value. Government would be glad to know the results of the experiments concerning the Lantana ash. In the possibility of its use as a manure lies that of effectually overcoming the noxious effects of the growth of Lantana.

8. It is gratifying to note that the analyses of famine foods are being systematically conducted. A list of the sample of famine foods analysed during the year would have been useful, had it been furnished.

9. The Government of India have sanctioned the appointment of Mr. Coleman as Entomologist and Mycologist to investigate insect pests and fungoid disease. He is now undergoing a post-graduate course to qualify himself specially for the work he will be required to do in the State and is expected to join in 1907. Two new Probationary Chemists out of the candidates trained by the Agricultural Chemist were appointed during the year and two more will be selected next year. The Agricultural Chemist has now a full complement of Assistants with whose assistance he should be able not only to carry out experiments on a more comprehensive scale, but tour about more frequently for studying local conditions of agriculture and advising and influencing the agricultural classes in a greater measure.

10. It is desirable to publish, in future, the Kannada translation of the report along with the English version, so that the results achieved during the year may be known as early as possible before the commencement of the next agricultural season. As the work can be completed during the period intervening the receipt of the English report and its review by the Government, the Agricultural Chemist will make proper arrangements for the purpose in future.

SIXTH ANNUAL REPORT OF THE AGRICULTURAL CHEMIST FOR THE YEAR 1904-05.

PART I.

1. This part of the report which treats of the general working of the Department is not intended for distribution. Part II contains all that is of general interest to the agriculturists of the State.

2. Four of the most important items to be recorded in this year's report are the acquisition of about thirty acres of land at Hebbal to be used for an experimental farm, the appointment of Mr. Leslie C. Coleman to the post of Mycologist and Entomologist, the preparation by very simple methods of an excellent sample of raw sugar, and the erection of a pot-culture house in the Laboratory compound.

3. *Experimental Farm.*—The lands of the Experimental Farm have been laid out into plots of one-tenth acre each and a test crop is being grown on them to record the degree of uniformity (or lack of uniformity) existing between the different lots. The details are given in the second part of this report.

4. *Staff.*—The Agricultural Chemist returned from leave on October 16th, 1904, and took over charge of his Department from Mr. Wetherell after the Dasara holidays. Mr. Leslie C. Coleman, B.A., Gold Medalist of the University of Toronto for the year 1904, has been appointed Mycologist and Entomologist to the Government of His Highness the Maharaja of Mysore in this Department. After one year's post-graduate work in Toronto, he worked for five months in the laboratories of the Department of Agriculture at Washington, and after studying in various laboratories in Europe and the Imperial Department of Agriculture at Pusa is expected to take up his work in Mysore in the early part of the year 1907. The scholars in Analytical Chemistry finished their course of training on the 30th of June 1905, and two of them, Mr. Narasimhaiengar, B.A., and Mr. Sampataiengar, passed the prescribed examinations at the close of the course and were appointed Probationary Assistant Chemists. The third scholar, Mr. Sectaramiah, B.A., failed and reverted to the Educational Department. D. G. Ramachandra Rao, who had been sent for a course of instruction to the Bombay Experimental Farms, has been appointed Superintendent of the Experimental Farm at Hebbal.

5. *Experiments in the Laboratory compound.*—The experiments in the Laboratory compound were very similar to those of last year, though somewhat more valuable. Experiments to test the after-effect of manures gave no indications that any of the manures applied last year had had any effect on this year's crop. Regarding cultivation, the improved ploughs and deep digging again showed beneficial results. Ground-nuts were badly diseased and gave poor returns. Sugar-cane gave very promising returns for a ratoon crop.

6. *Coffee experiments.*—The experiments on Mr. Denne's and Mr. Harris's experimental fields of coffee were continued and confirmed previous results, *viz.*, that for some reason or other the fertilizers applied did not act.

7. *Pot-culture house.*—A pot-culture house, which is so very important when investigating problems in agriculture, is in course of erection.

8. *Out-buildings.*—These and the Laboratory compound wall have been practically completed.

9. *Sugar-boiling experiments.*—The attempts made thus far to make centrifugalled sugar instead of jaggory have been very successful indeed, raw sugar of the very best quality having been produced. It is now highly desirable to make experiments on a larger scale with larger machinery. Experiments regarding the effect of lime on the color of jaggory indicate that liming to a slight alkaline reaction *improves* instead of *spoils* the color of jaggory, while if limed short of this point, an increase of lime darkens the jaggory produced.

10. *Analyses.*—The analytical work consisted in 17 samples of fertilizers; 131 samples of sugar, massecuite, etc., 22 samples of coffee; and 83 other agricultural samples principally famine foods. Two of the Assistants were engaged exclusively on work for the Geological Department; of these Mr. Venkata Rao, B.A., devoted practically all his time to gold analyses. The analyses done for the Geological Department consisted of 32 complete gold analyses, 86 assays of gold and silver, and 11 analyses of rocks and minerals. The principal part of the analyses of agricultural samples are contained in Part II of this report. The analyses done for the Geological Department will be published, if published at all, by the Geological Department.

11. *Correspondence.*—The correspondence which consisted principally in the answering of questions on agricultural problems is increasing and requires a very large portion of the time of the Agricultural Chemist. Nine hundred and thirty-seven letters were received and nine hundred and forty-three were sent out. With this correspondence and the other clerical work required in this Department the clerks are often overcrowded with work and frequently the replies to questions are delayed much longer than should be in an office of this kind. Another item occupying considerable time is the answering of questions set by persons seeking information in person.

12. *Tour to Pusa.*—In December 1904, the Agricultural Chemist started on a tour with the principal object of attending the first meeting of the Board of Agriculture at Pusa. On his way he visited the chemical laboratory connected with Messrs. W. Coen & Co.'s Manure Works at Hubli. This laboratory was built at the suggestion of the Agricultural Chemist and fitted up in consultation with him. Mr. W. Coen, senior member of the firm, had received a short course of training in Nitrogen determination in this laboratory, and the object in visiting the laboratory at Hubli was to see that all was in proper working order and to test the apparatus. The Exhibition at Bombay was visited especially with the object of seeing what agricultural machinery and implements were exhibited. And if that exhibition gives any idea of the implements actually in use or likely to be used soon in Bombay, that Presidency is much further advanced in matters of agricultural implements than I had expected. At Pusa many subjects of interest to agriculture were discussed, but an advantage even greater than this was the meeting and the coming into closer touch with the various men interested in agricultural investigations. Outside of the Pusa staff I was interested in and benefited most by the meeting with Dr. Mann, the Scientific Officer of the Indian Tea Association. On the meetings at Pusa and on the Institute itself a separate report has already been submitted with my letter No. 554, dated 10th February 1905, to the Secretary to the Government of His Highness the Maharaja of Mysore. The same report also contains a statement of the impression received at the Samalkot Sugar-cane Experimental Farm.

13. The only publication issued during the year is the Annual Report of the previous year's work; and of that the Kanarese translation is far from being completed. The translation is being made by the Superintendent of the Experimental Farm who should spend *all* his time on the Farm. It is hoped, however, that this work can in future be done either in the office or by some other Agricultural Assistant.

14. All the Assistants and the subordinates have worked faithfully and well, and my thanks are due to each and every one of them for the cheerful way in which they have done all the work entrusted to them.

PART II.

15. This is the only part of the report intended for distribution. Part I does not contain information of general interest to the agriculturists of Mysore.

EXPERIMENTAL FARM.

16. Some years ago lands were selected for an Experimental Farm by the Agricultural Chemist, and were visited by and approved of at the time by Sir P. N. Krishna Murti and Mr. Mollison. But at the time the plan to open an Experimental Farm fell through. These lands were acquired and handed over to this Department in January 1905. They consist of twenty-one acres and nineteen guntas of dry and garden lands and nine acres and twenty-seven guntas of wet land under the Hebbal tank five miles from Bangalore. The dry land which is almost adjoining the wet area, is lying between the Yelahanka road and the Military reserve just south of the Hebbal tank. It is a ferruginous loam representing, as far as can be judged by the eye, fairly well the average soil of the State. The soil is as uniform as could be found in the neighbourhood of Bangalore, but gradually changes a little from the road to the Military reserve, and from the southern boundary to the tank. It slopes gradually and uniformly towards the tank. Enclosed is a map showing the original fields and the plots as laid out at present. These plots are one-tenth of an acre each, being fifty links wide and two hundred links long. The land was previously owned by several raiyats who have

naturally treated it somewhat differently in regard to manuring and cultivation. The various pieces used as garden lands are of course in much better condition than those used for ordinary dry crops. This causes considerable temporary differences to exist in some of the plots in addition to probably slight permanent differences. These temporary differences, it is hoped, will disappear in the course of a year or two. If any permanent differences exist, they will have to be compensated for by a judicious disposition of the duplicate plots. To get a clear insight into the differences actually existing between the various plots intended for experiments, all the plots were treated exactly alike this year. The crop growing on them is ragi. The grain and straw produced by each plot will of course be weighed separately. And if the results are sufficiently uniform over a sufficiently large part of the area, that area will be used for experiments next year. The remainder will be again placed under uniform treatment. Just what the nature of the experiments will be cannot of course be determined until after the present test crop has been reaped and weighed.

17. A part of the dry lands nearest the tank, which is not quite as uniform as the remainder, is already excluded from the experimental ground proper. On part of this, various garden and field crops have been grown this year. The seeds of most of these were kindly sent by the Bombay Department of Agriculture from the Experimental Farm at Manjri. These crops are doing well on the whole; though some of them, notably one otherwise very promising variety of brinjals, have suffered very much from disease. On an apparently even part of this non-experimental area ragi was sown at various times to get a general impression of the effect the time of sowing has on this crop. In this experiment the rain is of course the most important factor. Sometimes there is enough rain to enable ploughing, but the soil gets too dry by the time the ploughing is finished to permit the grain to germinate. After the next rain some time is again required before the sowing is completed. To test if it would be possible to sow as soon as the ploughing is finished, even if the ground is too dry, and thus permit the crop to get the full benefit of the next shower of rain, was one of the objects of these experiments. In addition to the danger that the seed may germinate and afterwards die for want of moisture, there is the draw-back that if the seed does not germinate, it may be eaten by ants or some other pest. To overcome this the grain was covered by a very thin film of kerosene oil. A little of this oil was poured on a heap of seed grain and this was thoroughly stirred so that each grain although appearing dry had a distinct smell of kerosene oil. To test if this thin coating had any injurious effect on the germination or the future growth of the plants a second plot was sown at the same time with seed not treated in this way. Within a week after the first set of two plots had been sown several good showers of rain fell. The grain treated with kerosene oil came up quite as well as that without it, and as far as appearances go at present the crop on the later sown plots is not likely to be as heavy as on those sown earlier. Next year these experiments will be begun earlier.

18. The so-called experimental area, that on which it is hoped to conduct comparative experiments hereafter, was ploughed twice with a one-horse Canadian plough, and as it was fairly weedy in parts, a Planet Junior horse hoe was used instead of a harrow before seeding. No manure of any kind was applied. But the crop looks very much better than that on the adjoining field which received a dressing of cattle manure and was cultivated in the usual way. To what this very considerable difference is due, it is at present impossible to say.

19. The wet area was also divided into one-tenth acre plots. One range is at a considerably higher level than the remainder and on it the soil is decidedly lighter, being a ferruginous loam not much heavier (or stiffer) than that of the dry area. On this range it is intended to conduct experiments with sugar-cane. The remaining ranges are a clay loam gradually becoming a little heavier towards the north-east. The land is the most south-westerly block under the Hebbal tank and slopes gradually towards the north-eastern corner. Each range and each plot can be irrigated and drained independently of the other. The plots are separated by bunds three feet wide and the top of these bunds serves, as a path. The entire so-called experimental area has been put under the same variety of paddy to test the uniformity of the soil in the same way as has been done for the dry lands with ragi. The accompanying map gives the original sub-divisions of these lands and the present experimental plots. The original differences in levels are also given. Care has been taken to have the present boundaries of the plots coincide as nearly as possible with the boundaries of the former fields, especially where any marked difference existed in the levels of the old fields. Still some re-levelling had to be done, and the effect of this is quite distinctly visible in the crop growing at present. But with the exception of a little filling in, which was necessary in the future sugar-cane range, no earth has been removed from or added to any of the plots. The levelling has been entirely in the plot itself, in fact in each individual one-third or half section of the plot (for all the plots are divided into two or three sections to reduce the amount of levelling required). And the poorer stand due to the removal of part of the surface soil in the higher part of the section is compensated for, to a large extent at least, by the better stand of paddy in the part where this soil has been added. The paddy was all grown in seed beds outside the experimental area and transplanted. Thus far, it has been practically free from disease or insect pests and promises to crop well. Of course no manure of any kind has been used.

20. Temporary buildings have been erected on the Farm which will, it is hoped, last until the permanent buildings which have been sanctioned are built. They are necessarily very small. A rain-gauge, kindly supplied by the Meteorological Department, has been set up, and some other Meteorological instruments such as sunshine recorder, will, it is hoped, be added in time.

LABORATORAY COMPOUND.

Ragi.

21. *Ploughing.*—The experiments with ragi were this year a little more satisfactory than last year. Still the results require to be taken with almost as much reservation as was necessary last year. The crop is better all round, on the manured as well as the unmanured plots. On the unmanured soil the difference in favor of the plot cultivated with the Canadian plough has largely disappeared when compared with the plots ploughed with the native implement. But on the land manured with cattle manure (on which practically no difference existed last year) there is this year a decided difference in favor of the Canadian implement. The plots which received cattle manure and were cultivated with the Mysore plough gave at the rate of 975 lbs. of grain per acre, those ploughed with the Canadian implement gave at the rate of 1,437 lbs. of grain per acre.

22. *Manuring.*—Last year, the cattle manure plots gave at the rate of only thirty-one and one-third pounds of grain for every one hundred lbs. produced by the commercial fertilizer plots. This year, they gave relatively much better returns, producing at the rate of eighty-six and a half lbs. of grain for one hundred lbs. grown on the commercial fertilizer plots, but the amount of commercial fertilizer used contained more plant foot than the cattle manure. Contrary to expectations there was no indication that any of the manures applied last year had any effect on this year's crop, not even the cattle manure. But owing to the uneven nature of the soil, it is impossible to detect slight improvements in crop due to the after-effect of the manures used last year even if they existed. The already small plots manured last year were divided, one-half remained unmanured, the other half was manured as in the previous year. If the soil had been uniform, any after-effect of last year's manures should have been noticed when comparing these half plots which had received manure last year, but not this year with the plots which had received no manure at all. But while two unmanured plots gave exactly the same amount of grain (at the rate of 1,225 lbs. per acre) the other two plots gave decidedly less (357 lbs. and 712 lbs). With such large difference in duplicate plots it is out of the question to attach much weight to any of the results. The average of these four plots is 879 lbs. of grain per acre, that of the six plots manured last year but not this year is just 800. No after-effect of the last year's manures can therefore be deducted. The average of the corresponding manured plots is, however, 1,393 lbs. per acre.

23. One plot which received a double quantity of commercial fertilizer both last year and this year, showed that too much manure had been applied, as it produced a very heavy crop of straw (nearly five and a half tons per acre) and practically no grain (595 lbs. per acre). The average of the plots dug deep (about two feet) was:—unmanured 1,212 lbs. per acre, manured with commercial fertilizers 1,475 lbs. Apparently ragi favors deep cultivation. But of course all these experiments are only preliminary and conducted on much too small a scale and on too uneven a soil to carry any weight except as indications for future experiments on the Experimental Farm.

24. The maximum crop for the variety of ragi (Halubile) used in this experiments appears for this season, on this soil, to have been about one ton of grain (2,225 lbs.) and a little over five tons of straw (11,375 lbs.) per acre.

25. The variety giving best returns this year was Balepatte, which produced at the rate of about one and two-thirds tons (3,750 lbs.) per acre of grain and nearly six and one-fourth tons (13,800 lbs.) of straw. This variety stood second last year, and the variety which headed the list last year, Jenumuddina ragi, stood third this year. But here too the plots are too small, and possibly too uneven, to draw any reliable conclusions. The crops are, however, very heavy for all the varieties. There is also an indication that the Madayangiri and the Dodda varieties would do relatively better when treated not as liberally as these plots have been treated.

26. *Sweet potatoes.*—The sweet potatoes did not do quite as well as in the previous year. The new Jersey gave exactly the same yield as the year before (at the rate of 14,175 lbs. per acre) and headed the list instead of being second as last year. The Virginia and the Nansimond gave at the rate of 8,600 lbs. and 8,760 lbs. per acre this year.

27. *Ground-nuts.*—The ground-nuts were all badly diseased this year. The Virginia instead of heading the list as it did last year with 10,100 lbs. per acre came last with only 3,550 lbs. per acre. The Japanese gave 4,100 lbs. instead of 8,750 last year, and the Pondicherry, 4,550 instead of 6,925 last year. The relative positions are therefore exactly reverse to those of the previous year. But of course, when diseased as they were this time, the returns would be of little value even if the soil had been absolutely uniform. The same seed will be sown next year, but that used for one-half the plot will be treated for five minutes with a one per cent solution of copper sulphate to see if such treatment will reduce the disease.

28. *Buildings.*—The out-buildings containing store rooms, implement rooms, godowns for two servants, and a potting room for the pot-culture house are practically completed. A pot-culture house is in course of construction. This is an iron structure which is to be covered on all sides with wire netting

Pot-culture house.

to keep out birds and other small animals which cannot pass through a half-inch mesh. In this pot-culture house will be a light railway track on which small cars can be run. On these cars will be the pots in which the various experiments are made. They are placed on cars so that at times of heavy rains or winds they can be easily run under shelter and at times when there is no danger from birds or other small animals they can be run out into on open yard if such should be desirable. Pot-cultures are quite a new line of experiments for India, or, as far as I know, any other tropical country. Dr. Leather has tried them on a small scale at Dehra Dun last year without a railway track and cars, but found that these appliances are necessary for satisfactory work. It is, at present, impossible to say what kind of shelter will be required here. In Europe and America these shelters are constructed of glass. But it appears likely that such would not answer under a tropical sun. As an experiment, the potting room in the new out-buildings will be used, to begin with, as a shelter for the plants. By replacing some of the ordinary tiles in the roof of this potting room by glass ones it may be possible to get enough light without getting too much heat. After finding out what is likely to answer for this purpose in this climate, it is hoped that the necessary changes or additions can be easily made.

29. In pot-cultures, the soil is all thoroughly mixed before being filled into the pots and thus the inaccuracies arising from an uneven soil are to a very large extent done away with. The other advantages and disadvantages will be explained after the completion of the house and after some work has been actually done in it.

30. *Compound wall.*—The compound wall protecting the small experimental plots in the Laboratory compound is also practically completed.

SUGAR AND SUGAR-CANE.

31. The experiments conducted with sugar-cane were this year confined almost exclusively to the manufacturing side of the sugar industry. Chief of these were the manufacture of raw centrifugal sugar, the determination of the amount of juice left in the cane when milled, as carefully as possible, with a local, three roller, iron bullock mill, and determining the extent of loss sustained by keeping the juice after being milled or the cane after being cut.

32. *Ratoon crop.*—The cane for these experiments was grown in the laboratory compound from the stubble of last year's crop. It is therefore a ratoon crop. The reasons for doing this were many; one of the chief of these was to see how a ratoon crop would grow here, and to find out if there were any very sound or strong reasons for not following in India the general practice of Cuba and other cane-sugar-producing countries. Some of the other reasons were—

(*a*) to get, if possible, the next crop in a little over a year's time, the variety grown was, as stated last year, one of the so-called eighteen months varieties;

(*b*) to avoid the necessity of planting the cane without the supervision of the Agricultural Chemist who was on leave, and incidentally

(*c*) to save the expense of planting.

The previous crop was cut in the latter part of March 1904. The ground was thoroughly dug and manured as in the previous year. Surface irrigation was given whenever necessary. The ratoon crop came up well. As far as could be judged by the eye, there were a larger number of stalks but shorter, thinner and shorter jointed. The white ants did quite as much, if not more, damage than in the previous year. The cane was wrapped as had been done the year before, but notwithstanding this and the fact that the canes were shorter, it did not appear to stand as errect at the time of cutting as the crop before it had done. But as one season's crop cannot be closely compared with an other produced the year before or the year after, these differences as well as the difference in yield can only be taken as indications. They are not experiments and only serve as indications for future experiments. Moreover actual field experiments, no matter how carefully conducted have to be repeated a large number of times before the results obtained can be considered as reliable. When stating, therefore, that this year's ratoon crop was almost exactly three-fourths of the crop produced last year, this does not imply that on this identical piece of ground this particular variety of cane will give as a first ratoon crop three-fourths of the crop it would have given if it had been planted out that season. But it indicated that it is well worth trying experiments with ratoon crops, especially as in this case the difference in the weight of the cane is to a large extent compensated for by the difference in time the "crop" has been occupying the land. The amount of juice obtained from one hundred lbs. of cane was very little more in 1903-04, than it was this year from the ratoon cane; being 67·64 lbs. in 1903-04 and 65·3 lbs. this year from the ratoon crop. The difference in the two years' crop is also influenced to some extent by the fact that this year about one-fourth of the field was purposely allowed to get over-ripe to see what influence this would have upon the composition of the cane and the quantity of the jaggory (or the sugar) boiled from the juice. During these three months probably very little growth took place, but a lot of the canes were destroyed by white ants, and possibly also by rats.

33. *Ripening of Cane.*—To find out when the cane was ready to be cut, and, more particularly, to study the difference in the composition of the cane during the latter stages of its growth, six average canes were cut at different times and analysed. The first sample was taken on January 22nd. To form some idea of the differences which existed in the more mature and the younger canes on the same plot on the same date, three samples of six canes each were taken on that day. One of these samples represented, as nearly as possible, the average of the plot; another, canes which were slightly below the average, and the third was composed of six canes above the average. The composition of the juice of these three samples of cane and that of the juice of the succeeding samples is given, together with the date on which these samples were taken, in the following table No. I:—

TABLE No. I.

Showing composition of juice of canes at various stages of growth.
Ratoon cane—previous crop cut in April 1904.

No.	Date of cutting			Glucose per cent	Sucrose per cent	Total solids per cent	Remarks
270	22	XI	04	3·04	9·5	12·8	From six canes below the average.
269		Do		2·47	10·1	13·4	From six canes of the average.
271		Do		2·17	11·75	14·6	From six canes above the average.
272	6	XII	04	1·33	14·1	16·0	From six average cane.
273	22	XII	04	1·33	14·95	17·0	Do
274	4	I	05	1·16	16·5	18·3	Do
275	18	I	05	·85	18·4	19·5	Do
276	31	I	05	·93	18·2	19·6	Do
277	14	II	05	·69	19·6	20·9	Do
278	21	II	05	·62	19·5	20·9	Do
279	28	II	05	·53	20·0	21·0	Do
280	21	III	05	·40	21·4	22·4	Do
281	1	IV	05	·54	19·6	20·9	Entire plot.
302	8	IV	05	·70	19·8	21·1	Do
318	17	IV	05	·67	18·4	19·8	Do
360	26	IV	05	·54	...	...	Do
362	9	V	05	·37	..	...	
363	19	V	05	·32	17·5	18·0	
364	26	V	05	·47	17·5	18·8	
365	3	VI	05	·31	16·0	17·0	
366	10	VI	05	1·00	14·9	16·2	
367	17	VI	05	·65	15·6	16·8	
368	24	VI	05	·55	16·0	17·3	
369	1	VII	05	·56	16·0	17·6	

In the above table samples up to No. 280, inclusive, were taken as described above. These show very clearly the decrease in the percentage of glucose and the increase in total solids and sucrose, or cane sugar, in the process of ripening. (Glucose or reducing sugar is a name given to a group of substances which, if present in jaggory, cause it to run or sweat in damp weather in proportion to the amount in which they are present, and are very objectionable from a sugar refiner's point of view. Sucrose, or cane-sugar, is the principal substance next to water found in the juice of sugar-cane. Pure white refined loaf sugar contains practically nothing but this kind of sugar. It is the only substance in sugar-cane which is really wanted. The more of this and the less of every other substance the sugar-cane contains, the better it is, other things being equal, for sugar-making. The total solids mentioned above include everything but the water found in the sugar-cane juice. The nearer the figure given in this column agrees with the figure given in the column headed Sucrose the better). The uniformity of the decrease of glucose and increase of sucrose and total solids as shown in the table above is surprising, considering the difficulties there are in taking representative samples. But when comparing these figures with samples Nos. 281, 302 and 318, which were taken when milling the entire crop, it is evident that the samples No. 280 and those preceding it, though very well taken, are a little

above the average. Samples No. 363 and those following it were taken two months or more after No. 280 (which is the best sample in the list). These samples are more striking in their decrease in cane-sugar and total solids than in their increase in glucose. This is especially worthy of consideration when noting the composition of the juice extracted when the entire crop of the cane was being harvested. But to this point I shall have to refer again later on. The only sample in which there appears to be a considerable increase in the Glucose is No. 366. As it contains one per cent of this substance or nearly twice as much as any of the other samples under consideration, there is evidently something wrong here. It may have been that this sample was not as promptly milled after the cane was cut as the other samples were. But this is a mere conjecture which is based on the results of some other work. There is no direct indication of any kind to prove that this conjecture is correct.

34. *Boiling of jaggory.*—The chief object of this year's sugar-cane experiments was, as stated before, to produce a raw centrifugal sugar. But as a hand centrifugal is very hard to work and as the centrifugal used this year was made for general laboratory work and not specially for sugar-making, the larger part of the juice was again boiled to jaggory. In the tables given below, the composition of the juice is given first and below it the composition of the jaggory produced. All the liming done was tested with red litmus paper. In the samples marked "fully" limed, slaked lime of the consistency of cream or very thin gruel (canji) was added to the entire mass of the juice intended to be boiled into jaggory. After a little of this slaked lime had been added, the juice was thoroughly stirred and a piece of red litmus paper held into the juice for nearly half a minute. If no change took place in the colour of the litmus paper other than that which would be produced if it were dipped into unlimed juice, more lime was added, again stirred thoroughly and tested with the litmus paper. This was repeated until a faint but *distinct* change of colour could be seen in the colour of the litmus paper by the red having changed into a faint blue. The slight difference in the appearance of the litmus paper caused by the colouring matter in the juice must not be mistaken for this change of colour of the litmus itself when juice is sufficiently limed. To avoid such a mistake, it is necessary to learn by experience the effect produced by dipping a piece of red litmus paper into unlimed juice and to learn to distinguish this from the change produced when just enough lime has been added. Care must also be taken that the litmus paper is fresh and not already partially discoloured by having come into contact with anything containing alkali before use. It must not have the slightest tinge of blue but be quite decidedly red. In the samples marked "half" lime, all the juice required for the boiling was thoroughly mixed, half this quantity was poured into the pan before liming, the remaining half was limed as described for full liming and afterwards also poured into the pan and mixed with the portion previously in the pan before boiling. "Three-quarter" limed means that one-quarter of the juice was poured into the pan and the remaining three-quarters limed as above; and in those marked "quarter" limed, only one-fourth of the total juice required for boiling was limed as already described.

Liming.

35. *Pan used.*—To prevent the discolouration of the first samples of jaggory from the rust of an iron pan, a copper pan was used this year. It had the ordinary shape used by the raiyats of Mysore and was six feet in diameter at the top, three and a half feet at the bottom and thirteen inches deep.

36. *Furnace.*—The furnace was in the corner of one of the rooms in the new out-buildings of the Laboratory and had proper fire bars, furnace doors, ash pit and chimney. But has no experiments were made in regard to the fuel required, these and some other improvements need not be considered here.

37. *Filtering.*—Before liming, all the juice was passed through a piece of ordinary "long cloth" placed in a basket of wire netting to separate from it all little bits of cane and other suspended matter. And just before the juice came to a boil the scum which had risen to the surface and is technically known as the "blanket" was skimmed off by means of a large copper spoon with a long handle specially made for the purpose. This scum was put in another basket of wire netting lined on the inside with a piece of "long cloth." Through this the juice gradually dripped out and the bulk of the scum remained behind. The skimming was continued from time to time until the juice had been boiled down to nearly half its bulk. On the average 1·82 oz. of scum were removed for each 100 lbs. of juice boiled and 3·12 oz. of foreign matter were removed by straining the juice before liming for the same quantity of juice. On the whole this amounts to very nearly one and a half pounds of foreign matter, or dirt, removed for every 100 lbs. of jaggory boiled, for it took between four and five pounds of juice to produce one pound of jaggory. Of course if the skimmings are not placed on some suitable filter such as a piece of "long cloth" and the juice, which is inevitably removed when skimming, is not saved, the loss will be very great. On the other hand, if an attempt is made to separate the scum from the juice removed with it by either using, as it generally done, a perforated skimmer, or by putting the skimmings into an ordinary basket and letting that which passes through the meshes of the basket run back into the pan, the greater part of the scum is simply broken up and returned to the juice and the attempt to remove the scum has very little practical result. The filter cloths must of course be carefully washed and dried each time they have been used, and on the score of cleanliness *no* wooden baskets should be used.

Removing of scum.

TABLE No. II.

Jaggory boiled from juice fully limed.

No.	Substance	How limed	Sucrose	Glucose	Total solids	Weight of juice required for 100 lbs. of jaggory	Glucose formed during boiling	Colour: Lovibonds' Tintometer: Yellow	Colour: Lovibonds' Tintometer: Red	Colour: Imperial	Remarks
1	2	3	4	5	6	7	8	9	10	11	12
281	Juice from Plot I A	Fully	19·60	0·54	20·9	...	...	...	...	...	
282	Jaggory boiled from 281	Do	91·40	2·30	..	514	0·00	...	...	...	
289	Juice from Plot I C	Do	19·05	0·59	20·2	...	...	...	...	...	
290	Jaggory from 289	Do	87·90	2·99	...	521	0·73	...	...	56	
296	Juic from Plot I E	Do	18·90	0·48	19·9	...	...	...	..	...	
297	Jaggory from 296	Do	82·90	3·78	...	524	1·67	...	...	91	
298	Juice from Plot I E	Do	19·40	0·57	20·6	...	..	..	...	...	
299	Jaggory from 298	Do	85·15	2·80	...	640	0·30	...	...	55	Badly charged
302	Juice Plot I F	Do	19·80	0·70	21·1	...	...	...	...	...	
303	Jaggory from 302	Do	1·60	4·30	...	528	1·42	15	3·1	102	
309	Juice Plot I H	Do	19·35	0·65	20·7	...	..	...	...	...	
310	Jaggory from 309	Do	84·70	3·50	...	512	0·66	...	...	81	
311	Juice Plot I H	Do	19·05	1·00	20·8	...	...	...	...	...	
312	Jaggory from 311	Do	81·80	5·26	...	...	0·97	...	...	104	

TABLE No. II—*concld.*

No.	Substance	How limed	Sucrose	Glucose	Total solids	Weight of juice required for 100 lbs. of jaggery	Glucose formed during boiling	Colour: Lovibonds' Tintometer: Yellow	Colour: Lovibonds' Tintometer: Red	Colour: Imperical	Remarks
1	2	3	4	5	6	7	8	9	10	11	12
313	Juice (Cheni)	Fully	15·70	0·96	17·9	...	...	...	...	..	
314	Jaggory from 313	Do	71·00	11·90	...	...	6·56	13·2	2·4	101	
316	Juice mixed lot	Do	17·60	1·80	20 6	...	...	...	...	...	Some of the canes had been lying for three days before milling. *Charred.
317	Jaggory from 316	Do	75·80	8·47	..	...	3·36	27	7·5	38*	
318	Juice Plot II B	Do	18·40	0·67	19·8	..	...	...	...	...	
321	Jaggory from 318	Do	83·40	3·70	...	...	0·66	22	5·1	69	
322	Juice Plot II B	Do	19·05	0·80	20·4	...	..	...	...	...	
323	Jaggory from 322	Do	81·75	6·30	...	...	2·87	..	..	92	
399	Juice Plot II G	Do	15·50	1 02	17·4	..	...	...	...	...	No. 399 and following cut three months later than the others.
400	Jaggory from 399	Do	75 00	6·85	...	...	1·65	...	..	...	
401	Juice Plot III A and B	Do	15 47	0·99	17·5	...		...	...	...	
402	Jaggory from 401	Do	77 45	8·47	...	...	3·52	17	3 7	95	
403	Juice from Plot III C and D	Do	15 80	0·82	17·9	...	...	...	...		
404	Jaggory from 403	Do	81·90	4·80	..	...	0·55	22	5·4	58	
405	Juice from Plot III E and F	Do	15·50	0·88	17·1	...	...	...	...	...	
406	Jaggory from 405	Do	76 40	9·30	...	...	4·96	13	3·1	100	
332	Juice from Plot II D	Overlimed	18·10	0·73	19·0	...	...	...	...	...	
335	Jaggory from 532	Do	85·30	3·70	..	...	0·26	...	..	60	
336	Juice Plot II D	Do	17·35	0·86	18·6	...	..	...	..	...	
337	Jaggory from 336	Do	81·80	3·80	...	...	0·00	..	...	46	

TABLE No. III.

Jaggory boiled from juice partially limed.

No.	Substance	How limed	Sucrose	Glucose	Total solids.	Weight of juice required for 100 lbs. of jaggory	Glucose formed during boiling	Colour: Lovibonds' Tintometer: Yellow	Colour: Lovibonds' Tintometer: Red	Colour: Imperial	Remarks
1	2	3	4	5	6	7	8	9	10	11	12
287	Juice (mixed lot)	Three-quarters	19·40	0·79	20·7	...	...	...	...	...	
288	Jaggory from 287	Do	82·80	4·27	...	491	1·10	...	...	70	
294	Juice (mixed lot)	Do	18·[illegible]0	0·77	20·6	...	...	...	...	...	
295	Jaggory from 294	Do	81·30	5·80	...	534	2·36	...	...	91	
300	Juice Plot I E	Do.	19·50	0·88	21·0	...	..	...	[illegible]	...	
301	Jaggory from 300	Do	83·10	3·90	...	491	0·15	...	...	70	
304	Juice (mixed lot)	Do	19·[illegible]0	0·69	20·9	...	...	...	...	...	
305	Jaggory from 304	Do	80·65	4·80	...	547	1·88	...	...	65	
407	Juice from Plot III G & G	Do	16·15	0·90	18·5	...	...	...	...	...	
408	Jaggory from 407	Do	80·50	5·40	...	..	0·92	...	...	...	
409	Juice from Plots I & J	Do	16·05	0·95	18·1	...	...	...	...	...	
410	Jaggory from 409	Do	77·45	8·70	...	...	4·12	19	39	70	
283	Juice from Plot I B	Half-limed ...	19·80	0·80	21·0	...	..	...	...	...	
284	Jaggory from 283	Do	85·50	4·03	...	584	1·44	...	...	72	
307	Juice from Plot I G	Do	18·30	0·90	20·1	...	...	...	...	...	
308	Jaggory from 307	Do	79·90	6·49	...	55[illegible]	2·61	...	...	70	
292	Juice from Plot I D	Quarter-limed	18·70	0·62	19·6	...	..	...	...	...	
293	Jaggory from 292	Do	80·10	6·80	...	400	4·09	...	...	103	

Note.—(1) 25 Grams of jaggory dissolved in 500 C. C. of water. The figures in column 10 indicate the depth in millimetres of columns of these solutions having the same colour.
(2) The shade of colour was determined in a 2" cell.

38. *Glucose in juice.*—The glucose in the juice is higher than was expected when starting the milling of the cane. For as sample No. 280, taken before milling began, contained less than half per cent, it was hoped that, as time went on, the glucose would drop still lower than that figure, as it actually did in some cases, but the average is decidedly above half per cent. Why this is the case requires further inquiry. It may be that the canes were not milled as soon as should have been done after being cut. It may be that canes which had been killed by white ants but still looked fresh were not carefully enough excluded, or it may be due to some other unknown or unsuspected cause.

39. *Glucose formed during boiling.*—The amount of glucose formed during boiling is also peculiar and inexplicable at present. When leaving out samples Nos. 399 and those following it which (as they were over-ripe, as considerable glucose formed during boiling and as they were nearly all fully limed) it would not be right to include, and No. 314 which is also evidently abnormal, the average per cent of glucose formed during boiling in the samples fully limed was 1·17%. In the three-quarter limed samples 1·37% of glucose was formed in this way, and in the half-limed sample and quarter-limed samples 2·02% and 4·09%, respectively, of glucose were formed in this way. But as the amount of glucose formed during boiling varied in the fully limed samples from nothing to 3·36%, it is evident that some other causes than the extent of liming were at work and that these figures do not indicate simply differences due to liming. The sample in which 3·36% of glucose was formed during boiling was badly charred; but as in the only other sample which was badly charred only 0·3% of glucose was formed in this way, the charring cannot be the only or chief cause of this glucose formation. If the fact that part of the cane used for this jaggory No. 317 had been cut three days before being milled had any thing to do with this abnormal glucose formation, I cannot say. But I shall make experiments in that direction as soon as circumstances permit.

40. *Colour.*—In order to be able to give a numerical value to the depth of colour of the various jaggories, it was decided to dissolve 50 grams (nearly 4½ tolas) of the jaggory in one liter (a little less than a quarter) of water. These solutions were filtered to remove all suspended matter and filled into glass tubes to such a height that the colours in all the tubes were of the same depth. The lighter the colour of the jaggory the thicker of course the layer of this solution had to be to match the depth of the colour of the other solutions of jaggory. The thickness of these layers or the height to which these tubes had to be filled to match each other in colours, were measured and are given in column No. 11 in the tables No. II and No. III above. The higher this number the lighter the colour of jaggory. A popular belief is that jaggories produced from juices which are "heavily" limed are darker, in proportion to the amount of lime added to the juice, than jaggories boiled from juice to which less lime has been added. When studying this problem we must exclude jaggories Nos. 299 and 317 as these were badly charred when boiled and had therefore a much darker colour than would be due to the lime added to the juice. Possibly some of the other samples of jaggory were also slightly charred, and this may account for the comparatively great variations which exist between jaggories apparently treated alike; but if any of the others have been charred, it was not enough to be easily detected. The average of the depth of colours of the jaggories "fully" limed is 81, and leaving out sample No. 314 which was very light in colour but which behaved peculiarly as far as the glucose is concerned, the average is still very nearly 80. The average of the three-quarter limed jaggory is 61 and the half-limed lot had an average of 71. The "fully" and "overlimed" jaggories (for the significance of these terms refer to page 9) were therefore those having the lightest colour, while those limed nearly but not quite to neutrality (the three-quarter limed lot) were the darkest and the half-limed lots were intermediate to the other two. The quarter-limed jaggory is left out of consideration as there was only one of these. These figures confirm last year's impressions as given in para 24, page 8, of the 5th Annual Report of this Department. The colour of the jaggory appears to behave very much in the same way as the colour of the juice of sugar-cane. The more lime is added to this the darker it gets until it is fully neutralised and becomes alkaline in reaction when the colour becomes very much lighter than it was before reaching neutrality. The raiyats who do not lime their juice *sufficiently* are therefore right in their opinion that the jaggory becomes darker in colour the more lime is added. *But if they add all the lime which is really required, the jaggory will have a brighter colour than that which is now produced,* and in addition it will be of much better quality. *That is if the experiments made in the Laboratory compound which has a very light red coloured soil, apply to the State as a whole,* and I have no reason to believe that they do not do so.

41. In columns 9 and 10 of the above table are given the results obtained with the Lovibond Tintometer on the solutions mentioned above, *viz.*, 50 grams in one liter. A two-inch cell was used. But these figures, though very valuable in giving a permanent record of the actual colours, are not of much interest except to those using this particular instrument. And as every one using that instrument will understand them without further explanation, no further comments are needed.

SUGARS.

42. A large and greatly increasing quantity of sugar is being imported to India every year. In 1893-94 this quantity was a little over 106,000 tons. Five years later the import had nearly doubled, being nearly 204,000 tons; and last year it was a little over 290,000 tons, which is an increase of over 42% in these last five years. This import amounts to nearly 2 lbs.

per head of population, and must represent a very considerable part of the total sugar consumption of India. These imports now come chiefly from Mauritius and Java, and less than 27,000 tons came last year from beet-sugar-producing countries. That such a large and increasing import of sugar takes place shows conclusively that there is something radically wrong with the Indian sugar industry. As far as Mysore is concerned, this "something" is certainly not to be found in the quality of the cane. For I know of no other country in the world in which sugar-cane is grown which contains 20 and 21% of sucrose as it does in Mysore at times. The quantity of cane per acre should of course be improved. But probably there is no part of the industry which requires greater improvement than the manufacturing side. The milling of the cane, the liming, the removal of scum when boiling and the guarding against loss from fermentation of the juice are factors which require careful attention. But as the sugar imported is either refined or goes to the Indian refineries to be refined before being placed on the retail market, it is evident that in order to compete with this imported sugar we must treat our cane juice in such a way as to produce in the most economic way high grades of sugar. And we are unable to do this as long as we produce jaggory first and send that to the factories to be refined. The fuel used to boil down the juice to jaggory is practically wasted, and the char filters and other parts of the refineries are given infinitely more work than need be if the molasses is not removed from the sugar before the latter is refined. Moreover the best grades of raw, centrifugalled sugar manufactured in the districts could be of a sufficiently high quality to be able to replace directly a part of the imported sugar. Jaggory would be unable to do this. As the universal experience is that refined sugars gradually replace the lower grades of sugars in the market, it is self-evident that as long as jaggory continues to be the chief product of the sugar-cane, the sugar industry is bound to decline unless a jaggory can be manufactured which is eminently suited for refining purposes. And as, for the reasons given above, this is not likely to be the case, it is necessary to replace jaggory boiling by more modern methods and to produce as good a quality of raw sugar as the circumstances will permit if the imported sugar is to be replaced in the Indian market by that produced in the country. India is the home of the sugar industry, and when sugar was first imported into Europe it was known by the name of "Indian salt." But the methods which were eminently successful 700 years, or even 150 years ago, cannot compete with modern applicances in an industry in which such advancement has been made as in sugar-boiling. Sugar has dropped very much in price. When first imported in large quantities into Europe it was sold for a price considerably over Re. 1 per pound. In fact only about 100 years ago it was sold, for a short time, for well over Rs. 2 per pound on the continent of Europe; but this excessively high price was due to great restrictions having been placed on trade with sugar in continental Europe. The present comparatively very low price is in a great measure due to better and cheaper methods of production, and in order to compete even in our own markets with countries employing these cheaper and better methods of productions, we must improve our own methods. If their methods are not applicable here we must make our own improvements; but improvements we must make if we want to keep a sugar industry. It is with a view of finding in how far we can adopt some of the improvements made elsewhere, without completely upsetting our existing industry, that the following experiments were made:—

43. The juice was treated exactly as described under the head of jaggory-boiling, but the boiling was not carried on quite as far, being stopped when the condensed juice on cooling formed a mass of about the consistency of thick mud. Experience alone can tell when the boiling has been carried on far enough, but a good jaggory-boiler will very soon learn this. We had not the slightest trouble in this respect. This mass called Massecuite was allowed to stand for three or four days, or longer if more convenient to do so. It was then thoroughly mixed, all hard lumps broken up and put into a small centrifugal in which the molasses was separated from the sugar. In the table below are given the composition of the juice and the Massecuite, and the sugar and molasses separated from it. The molasses was boiled a second time, and the amount of so-called second sugars separated from this molasses is also given.

TABLE

Serial No.	Substance	Weight of water (lbs.) used per 100 lbs. of sugar for washing in centrifugal	Percentage of sucrose	Percentage of glucose	Percentage of total solids	Moisture
1	2	3	4	5	6	7
306	Juice from Plot I G	.....	19·55	0·91	21·3	...
378	Massecuite boiled from above 306	...	74·85	6·30	...	...
379	(a) Sugar made from 378	Unwashed	95·60	1·20	...	1·99
380	(a) Molasses separated from 379	.....	49·70	12·80	...	...
381	(b) Sugar do 378	Unwashed	94·00	1.50	...	3·06
382	(c) Molasses do 381	... ..	49·60	12·80	...	...
383	(d) Sugar do 378	Unwashed	94·70	1·30	...	2·08
384	(e) Do do 378	5·12	97·50	0·68	...	1·80
324	Juice from Plot II C	.....	18·10	0·80	19·6	...
385	Massecuite boiled from 324	...	78·20	4·46	...	...
387	(a) Sugar separated from 385	4·43	95·00	1·00	..	2·88
388	(b) Do 385	Unwashed	94·40	1·32	...	2·66
391	(c) Do 385	4·61	95·90	1·12	...	2·30
329	Juice from Plot II C	... ..	18·00	1·16	19·9	...
389	Massecuite boiled from 329	.....	76·90	8·25	...	...
390	(a) Sugar separated from 389	Unwashed	95·20	1·57	...	1·90
392	(b) Do 389	Do ...	94·90	1·74	...	1·50
331	Juice from Plot II C	.. ...	17·40	0·86	18·9	...
370	(a) Massecuite boiled from 331	.....	80·25	4·63	...	...
371	Sugar separated from 370	7·48	98·10	0·45	...	·26
372	Do 370	7·48	98·50	0·40	...	...
373	(b) Massecuite boiled from 331	.....	81·20	4·46	...	...
374	Sugar separated from 373	Unwashed	97·40	0·80	...	·43
375	Do do 373	Do ...	97·10	1·00	...	·49
376	Molasses do 375	.....	53·50	10·20	...	...
377	Sugar do 373	2·31	98·00	0·80	...	·35
393	Sugar separated out of a mixture of all the molasses on standing.	.. ...	86·00	4·06	...	...
397	Juice from Plot II F	.....	15·50	1·05	17·7	...
398	Massecuite boiled from 397	.....	73·35	9·40	...	...
459	Sugar separated from 398	Unwashed	96·50	3·70	...	...
461	Molasses do 459	.....	46·50	18·50	...	...
460	Sugar do 398	Unwashed	89·95	3·70	...	..
462	Molasses do 460	..	45·10	20·30	...	...
394	Molasses out of which 393 was separated ...	... ..	53·75	12·50	...	...
452	Massecuite boiled from 394 (2)	... ..	59 50	13·50	...	...
453	Sugar separated out of 452	Unwashed	86·50	5·1	...	...
456	Molasses separated from 453	.....	32·30	27·7	...	...
454	Sugar separated out of 452	Unwashed	87·00	5·2	...	...
457	Molasses separated from 455	.....	31·70	27·7	...	...
455	Sugar separated out of 452	Unwshed	85·90	5·3	...	...
	Average of all jaggories in the next table	.. ...	81·63	5·48	...	...
	Average of sugars in this table	... ..	95·80	1·39	...	...

NOTE—(1) Calculated on amount of Molasses.
,, (2) 100 lbs. of Molasses gave 87·7 lbs. of Massecuite.

261

No. IV.—*Sugars.*

Percentage of first sugars calculated on first massecuite	Percentage of first sugars calculated on first massecuite before being washed	Percentage of second sugars calculated on weight of first massecuite	Percentage of total sugar calculated on weight of first massecuite	Pounds of centrifugalled sugar obtained from weight of juice giving 100 lbs. jaggory	Colour — Lovibond's Tintometer — Yellow	Colour — Lovibond's Tintometer — Red	Colour — Imperial	Remarks	Serial No.
8	9	10	11	12	13	14	15	16	17
...	...	...	...	...	...	...	...		306
...	...	...	...	...	...	...	...		378
60·1	...	17·1	77·2	82·5	18	3·3	80		379
...	...	...	...	...	...	...	...		380
62·0	...	16·3	78·3	83·7	18	4·3	75	Belt broke.	681
...	...	...	...	...	...	...	...		382
61·8	...	16·4	78·2	83·6	18	3·7	72		383
58·6	64·02	17·8	76·4	81·7	7	1·8	152		384
...	...	...	...	...	...	...	...		324
...	...	...	...	...	...	...	...		385
62·53	67·3	16·1	78·63	83·8	25	5·1	55		387
66·37	...	14·4	80·77	86·4	60	7·7	35		388
63·68	69·7	15·6	79·28	...	24	4·4	45		391
...	...	...	...	...	...	...	...		329
...	...	...	...	...	...	...	...		389
61·97	...	16·3	78·27	84·7	18	4·5	65		390
64·60	...	15·2	79·8	85·6	67	6·0	42		392
...	...	...	...	...	...	...	...		331
...	...	...	...	...	...	...	...		370
56·8	58·0	18·5	75·3	80·5	18	3·7	80	Coarse.	371
56·8	...	18·5	75·3	80·5	14	3·2	87	Fine.	372
...	...	...	...	...	...	...	...		373
...	...	...	...	...	25	5·7	50	Coarse.	374
86·00	...	13·7	81·7	87·3	25	5·9	50	Fine.	375
...	...	...	...	...	...	...	...		376
63·5 (1)	68·87	15·7	79·2	84·6	20	4·6	63		377
4·02	...	...		...	...		...		393
...	...	...	...	...	...	...	...		397
...	...	...	...	...	...	...	...		498
62·3	...	16·2	78·5	83·9	73	11	34		459
...	...	...	...	...	...	...	...		461
63·3	...	15·7	79·0	84·4	74	11	32		460
...	...	...	...	...	...	...	...		402
...	...	...	...	...	...	...	...		394
...	...	...	...	...	...	...	...		452
...	...	46·9	...	...	168	24	8		453
...	...	...	...	...	...	...	...		456
...	...	47·4	...	...	112	24	8½		454
...	...	...	...	...	...	...	...		457
...	...	50·5	...	...	124	26	8		455
...	...	...	...	...	...	...	...		
62·16	...	...	...	83·78	...	...	...		

44. *Centrifugal.*—Last year a regular sugar centrifugal 18 inches in diameter, geared by means of cog-wheels to a speed which was supposed sufficient for hand use was used to separate the molasses from the massecuite and produce centrifugal sugar. But the centrifugal was so difficult to turn at a speed approaching that required for sugar work that all attempts to use it proved a failure. This year an American laboratory hand-centrifugal with a 10-inch basket geared so that it could be run at a speed of about 1,500 revolutions was used. The maximum amount of massecuite which could be centrifugalled at one time was about 11 pounds, which gave roughly speaking about 7 pounds of sugar. But the work required to separate this small amount of sugar was so great that only a comparatively small quantity of the juice was boiled into massecuite, the greater part being used for jaggory. This was no doubt partly due to the fact that the centrifugal was not specially made for sugar work. But our experiments so far give little hope that hand centrifugals can be used to advantage in the production of sugar for the market. But the quality of sugar produced and its outturn when compared with jaggory as given in column No. 12 of the above table are very encouraging, indeed, and make it highly desirable to repeat these experiments as soon as possible with a larger plant driven by steam, or an oil-engine where fuel is very difficult to get.

45. The best sample of sugar given in the above table is No. 372. It is an extraordinary fine sample of raw centrifugal sugar and it received no special treatment except that it was washed in the centrifugal with about 7½ per cent of its own weight of water. In other words after all the molasses which could be easily separated by this small centrifugal had been got rid of, a little water was poured into the centrifugal when in motion and this in passing through the sugar removed the greater part of the remaining molasses. After this washing it was allowed to dry six or seven hours, and after that passed through a sieve to separate the larger grains from the smaller ones. This was done to give the sample a more uniform appearance. It was one of the samples sent to the Bellary Exhibition. In this sample there was less than a half per cent of glucose. Sample No. 371 representing the portion which remained on the sieve when preparing the sample No. 372, is of very nearly the same composition though a little darker in colour. But judging from the results of this year's work it is doubtful if the washing of raw sugars in the centrifugal pays.

46. The molasses separated from all the various samples of sugar was mixed together. After standing for over a month, some very fine-grained sugar separated out. This was removed by passing all the molasses through the centrifugal. The sugar obtained in this way is sample No. 393, which contains, as will be seen, a high percentage of glucose, and is somewhat similar to samples Nos. 452-454. The latter are so-called second sugars, that is, they were obtained as stated above by boiling down the molasses a little further and allowing it to stand for several weeks to permit the sugar to crystallise out of the tarry mass. The quantity of molasses was rather too small to permit of easy boiling. The entire mass charred for some unknown reason, and the second sugars produced were very dark on that account. 64¾ lbs. of molasses were boiled down to 52¼ lbs. second massecuite, in other words, only 19·3 per cent of water were evaporated. On an average 10 lbs. of second massecuite gave 4·83 lbs. of the second sugars. Or nearly 39 per cent of the original molasses was transformed into second sugars. When we add to this the 4 per cent of sugar separated out of the molasses on standing, we find that every 100 lbs. of the original molasses gave 43 lbs. of sugar. This figure forms the basis for calculating the quantity of second sugars entered in column No. 10. The figures in column No. 12 indicate the amount of centrifugal sugars (first and seconds combined) which were obtained from a quantity of juice which would have given 100 lbs of jaggory of the average composition of the jaggories produced this year, the analyses of which are given in Tables No. II and No. III. The remainder has been separated out in the form of molasses. This, as will be seen by referring to No. 456 and No. 457 in the table above, has 27·7 per cent of glucose and only 32 per cent of cane sugar. This is a very satisfactory result as it shows that but little more sugar-cane has passed into the molasses than the glucose contained in it. This is especially satisfactory for a first attempt. But it is to be hoped that the amount of glucose formed during boiling will be materially reduced in future experiments. This hope is justified by the results of the experiments of previous years. On the whole we have every reason to hope that with a comparatively small expenditure in machinery we will be able to very materially improve the sugar industry of Mysore. Whether it will be advisable or necessary to use pans heated by steam instead of by direct firing, future experiments will have to show.

47. *Milling of cane.*—It is of course in the juice of the sugar-cane in which the cane sugar (the substance for which the sugar-cane is cultivated) is found. The solid structures which form the vessels containing the juice are of comparatively little if any commercial value, but are generally used as fuel for boiling down the juice. It is however practically impossible to completely separate the juice from the solid structure called mark. Even the best mills leave a small proportion of the juice with the mark. This mixture of mark and juice left in it after milling is called begasse, or in some countries meggasse. Begassee from the most powerful nine-roller mills still contains about 5 per cent or a little more of the juice. The proportion of the juice left in the Begasse is of course less when the mills are large and the pressure great. But in addition to the greater pressure which can be exerted by large mills, these large nine-roller

mills have the additional advantage that the cane is sprinkled with water between each set of three rollers. The juice being diluted in this way, the portion left in the cane is also diluted and contains less sugar than it otherwise would. The begasse is similar to a sponge soaked in juice of sugar-cane and squeezed dry. The harder it is squeezed the larger the proportion of the juice which will run out. If it is afterwards soaked in water and again squeezed to the same extent, more diluted juice runs out; and if this process is repeated often enough, the sponge will finally be practically free of juice. By this method of sprinkling the cane with water as it passes from one set of rollers to the other much more juice can of course be extracted than without it. But in addition to the size and construction of the mill, the amount of mark the cane contains will materially affect the amount of the juice lost in the begasse. A small sponge will retain a much smaller weight of liquid (or juice) than a larger sponge subjected to the same pressure. Sugar-cane containing little mark is, therefore, other things being equal, more valuable than cane containing much mark; and this must be taken into account when judging the efficiency of a sugar-cane mill.

TABLE No. V.

Showing percentage of juice left in begasse (refuse cane) when milling with ordinary three-roller iron sugar mill.

Serial No. of juice	Weight of cane used, lbs.	Weight of juice obtained, lbs.	Percentage of extraction (1)	Weight of begasse (2) lbs.	Percentage of extraction (4)	Total solids in juice	Moisture in begasse	Percentage of mark (4) in begasse	Percentage of juice left in begasse
1	2	3	4	5	6	7	8	9	10
281	343¾	200½	58·0	137½	602	20·9	59·06	10·08	31·9
283	414¼	252	60·8	148	64·3	21·0	56·51	10·17	28·4
285	431	259½	60·0	162½	62·3	21·0	56·89	10·35	30·3
289	451	276½	61·3	166	63·2	20·2	56·70	10·66	29·3
291	472	289½	61·3	170	64·0	20·0	59·59	9·18	29·5
(5) 292	450½	224	47·7	215	52·3	19·6	55·65	14·69	38·7
294	413¼	283½	68·6	120	71·0	20·6	55·80	8·62	22·3
296	406	262½	64·5	137½	66·2	19·9	59·55	8·69	28·5
298	178	128	71·9	46¼	74·1	20·6	57·41	7·17	20·2
300	467¾	284½	60·8	179¾	61·6	21·1	51·61	13·28	29·0
302	428½	280	65·3	141	67·1	21·1	56·73	9·24	26·1
304	454	284¾	62·3	162¼	64·5	20·9	51·26	12·50	26·3
306	473	314½	86·4	149½	68·4	21·3	53·75	10·02	24·0
307	472	311½	66·0	151¾	67·8	20·1	55·50	9·82	24·8
309	370½	251	67·7	111½	70·0	20·7	57·63	8·20	23·7
311	433¾	285	65·7	139	68·0	20·8	53·86	10·24	24·2
(6) 313	494	282½	57·2	200½	59·4	17·9	47·64	17·04	28·4
316	379½	253½	66·8	117½	69·0	20·6	51·40	10·93	22·5
318	377¾	253¾	67·1	118	78·8	19·8	56·94	9·06	24·4
322	353	225	63·7	120	66·0	20·4	52·59	11·54	25·4
324	386	269½	69·2	118	69·4	19·6	53·75	10·15	22·8
329	431¾	283½	65·6	136	68·5	19·9	52·04	11·04	23·0
331	454	298½	65·7	148	67·4	18·9	52·30	11·56	23·7
332	416½	266	63·9	137½	67·0	19·0	53·95	11·02	24·7
336	469½	314	66·8	138	7·06	18·6	53·71	10·09	21·6
(7) 395	479	314	65·5	153½	67·9	17·0	60·90	8·55	25·8
(7) 397	446	286	64·1	147½	66·9	17·7	59·8	9·04	26·4
(7) 399	484	318	65·7	152	63·6	17·4	58·5	8·75	24·8
(7) 401	510	328	64·3	172½	66·2	17·5	60·3	8·75	27·4
(7)									

TABLE No. V.—*concld.*

Serial No. of juice	Weight of cane used, lbs.	Weight of juice obtained, lbs.	Percentage of extraction (1)	Weight of begasse (2) lbs.	Percentage of extraction (3)	Total solids in juice	Moisture in begasse	Percentage of mark (4) in begasse	Percentage of juice left in begasse
1	2	3	4	5	6	7	8	9	10
403 (7)	529	342	64·6	173	67·1	17·9	60·5	8·60	26·4
405 (7)	418	274	65·5	128	69·4	17·1	58·2	9·12	23·6
407 (7)	408	269	95·9	131	67·9	18·5	62·0	7·68	26·8
409	537	340	63·3	189	64·8	15·1	59·3	9·71	28·2

(1) Extraction calculated by dividing the weight of juice by the weight of cane.

(2) Begasse is the refuge cane coming out of the mill.

(3) Extraction calculated by dividing the weight of begasse by the weight of cane. This is not as accurate as the extraction given in column 4 as the begasse loses weight very rapidly owing to the large surface from which the juice can evaporate.

(4) Mark is what remains when *all* the juice is removed from the sugar-cane.

(5) The cane from which juice No. 292 was obtained was very short in the joints. This accounts for the high percentage of mark and the low extraction.

(6) The cane from which the juice No. 313 was obtained was a hard thin variety known as Chinikabbu.

(7) The begasses corresponding with the sample of juice No. 395 and succeeding samples were sampled, weighed, and dried more rapidly than the others, and the figures given in the columns 9 and 10 for these samples are therefore more accurate than the others in the same columns.

48. The mill used in the experiments this year was a locally made three-roller iron mill. The rollers are placed vertically and are of equal size—9 inches long and 6½ inches in diameter. The figures given in column 4 and column 6 ought to be the same if both were absolutely accurate. But the refuse cane or begasse loses weight very quickly owing to the juice still retained in it evaporating very quickly, for it is spread out in a thin layer over a large surface. As the begasse is really heavier immediately after it is milled than a little later when it is actually weighed, the results calculated from the figures thus obtained give a little higher extraction than that which is actually obtained. But the juice in the pails also evaporates a little before weighing, though not nearly as much, as that in the begasse; the results obtained when dividing the weight of the cane into the weight of the juice as given in column 4 are therefore not quite accurate either. They are a little too low. The truth is somewhere between these two results though nearer those given in column No. 4 than those recorded in column No. 6 in Table No. V above. Nevertheless the latter results are taken for calculating the results given in column No. 10, and these results are therefore too low in exactly the same proportion as the figures in column No. 6 are too high. There is therefore actually a little more juice left in the begasse (refuse cane) than these figures indicate. The mill was set much closer than is usually done by the raiyats. (The begasse was very much cut up when it came out of the mill and was in small pieces so that all of it had to be carried in baskets from the mill to the scales.) And the juice left in the begasse in actual practice is therefore more than it was in these experiments. With these small iron mills which are no doubt a great improvement on the old wooden mills, there is therefore a loss of ¼ to ⅓ of the juice originally contained in the cane. This is a loss much greater than was anticipated. For some time to come the best mills, those extracting all but five per cent to ten per cent of the total juice of the cane, are both too large and too expensive to be used in Mysore except by large firms having a large area under sugar-cane; for they can mill from 500 to nearly 1,000 tons of cane a day and could easily mill 1,000 acres of the best cane in a season But there is a very large range in sizes of sugar-cane mills between these giants, and the so-called improved sugar-cane mill used in Mysore. And with a mill very much smaller and cheaper than the largest mills in use elsewhere a very much better extraction should be possible than the "improved mills" in Mysore are able to give. Next year it is hoped we shall be able to make experiments with a three-roller mill driven by an oil-engine having rollers eighteen inches long by twelve inches in diameter capable of crushing one ton of cane per hour. The rollers lie horizontally. Such a mill is being imported for Mr. Krishnaiengar, Inamdar of Oorgahalli, and experiments will be made with it after it arrives.

49. *Deterioration of cane after cutting.*—The general impression in cane-growing countries appears to be that cane deteriorates but little after being cut for a day or two at any rate. In Louisiana cane is sometimes preserved in pits for a month or more after cutting for seed. Cane sent for some distance to central factories must of course be cut some considerable time

before being milled, especially if it is sent, as is sometimes done, for fifty miles or so. And when considering the advisability of starting Central Sugar Houses in India, a very important question is to find out how long cane will keep and how far it may be sent without serious loss. For the purpose of studying this question the canes from one plot were divided as evenly as possible into twenty samples. Of these, two were analysed soon after being cut. But as there appeared no special reason for hurrying and as the sorting and sampling took some time, these samples had been cut for some hours—probably four or five—before being analysed. The other samples were analysed from two days to one month later. Some samples were not topped, to see if this would have any effect on their keeping quality. Below are given the results of the analyses together with the dates on which they were made.

TABLE No. VI.

Table showing the effect of cutting cane before milling it. Analysis of juice of sugar-cane cut April 22nd, 1905, and kept for various lengths of time :—

No.	Date	Weight					Calculated to original weight taking ten per cent mark in cane			Remarks
		Original lbs.	When analysed lbs.	Sucrose ; per cent	Glucose ; per cent	Total solids per cent	Sucrose ; per cent	Glucose ; per cent	Total solids ; per cent	
1	2	3	4	5	6	7	8	9	10	11
338	22 IV 05	26	26	16·40	·87	17·70	16·40	·87	17·7	
339	22 IV 05	25¼	25¼	17·30	·87	18·60	17·30	·87	18·6	
340	24 IV 05	26¼	25½	13·75	3·67	18·60	13·16	3·51	17·8	
341	26 IV 05	26½	24¼	14·35	5·20	19·20	12·94	4·69	17·7	
343	28 IV 05	24¾	21¾	13·40	6·25	20·30	11·53	5·39	17·9	
344	28 IV 05	...	..	15·10	5·81	22·50	...	...	...	Tops left on.
345	1 V 05	24	20	13·35	7·30	22·00	10·87	5·94	17·9	
346	1 V 05	24¾	20½	13·35	7·10	21·70	10·83	5·76	17·6	
347	3 V 05	23	18¼	13·70	7·60	22·20	10·53	5·87	17·1	
348	5 V 05	26	22	13·45	8·50	22·70	11·15	7·05	18·8	
350	7 V 05	21	15½	13·90	8·60	23·80	9·90	6·10	16·9	
351	7 V 05	24	18¼	13·35	8·80	23·70	10·07	6·64	17·9	
352	9 V 05	26½	20	14·70	8·80	24·10	10·70	6·41	17·5	
353	12 V 05	22½	17	12·70	9·40	24·20	9·26	6·85	17·6	
354	12 V 05	26½	19½	14·15	9·20	24·80	9·82	6·38	17·2	
355	15 V 05	24½	16¾	12·95	10·87	25·50	8·38	7·03	16·5	
356	17 V 05	24½	16¾	12·25	10·90	25·40	7·93	7·05	16·4	
357	17 V 05	24¾	17	12·70	10·10	23·90	8·30	6·61	15·6	
358	19 V 05	24½	16¾	15·05	10·50	25·40	6·80	6·79	16·4	
359	25 V 05	37½	23½	7·90	12·80	23·70	4·57	7·50	13·8	Tops left on.
360	25 V 05	25½	15½	12·30	11·60	26·60	6·95	6·55	15·0	Do

Samples Nos. 338 and 339 have not quite the same composition though they are similar samples. From data found in the analyses of the succeeding samples, No. 338 may be taken to very fairly represent the average composition of all the samples on that date. No. 339 is certainly above the average in sucrose and total solids. But it is especially the glucose which we have to consider in this set of experiments. Both samples contain, as will be seen, ·87 per cent of this constituent. As the samples were not milled immediately after they were cut, it is just possible that some change may already have taken place in them when they were analysed; for ·87 per cent is rather more glucose than it was expected to find. But as in the case of the experiments made to test the keeping qualities of juice, practically no change took place in some of the samples during the first nine hours. It is not likely that much change has taken place in these samples of cane before the analyses were made, for it is natural to assume that cane

will keep longer than the juice after it has been extracted. In two days' time the change in the cane is however very great. As will be noticed by comparing columns Nos. 3 and 4, there has been some loss in the weight of cane, and the percentage of glucose and the sucrose will, owing to the drying out of the cane, of course appear to be higher than it would have been if the cane had not lost some of its water. But this drying has been allowed for in the results given in columns Nos. 8, 9 and 10. These give, therefore, the actual change which has taken place, for in them the changes produced by the simple drying out of the cane has been eliminated. The change in the first two days has been very much greater than in any of the succeeding two days. Why this should be the case is at present difficult to understand. There is an increase of nearly three per cent in the glucose and a decrease of a similar amount in the sucrose. This denotes a very serious loss indeed, as it will probably represent the loss of over one-third of the total sugar if the product is to be sugar and not jaggory. But of course these experiments will have to be repeated a number of times before they can be taken to represent the actual state of affairs. During the first twenty days or more after cutting, the loss in sucrose was about balanced by the gain in glucose, so that the total solids remained very nearly the same for this period of time. After that the total solids begin to decline showing that other changes than the simple transformation of sucrose into glucose had taken place. Leaving the tops on the cane has apparently not made much difference in these experiments. But that part of the question has not received a fair test this year. The results of these experiments as a whole have indicated that there probably is a very much greater loss by cutting the canes a day or more before milling than is generally believed. The experiments must be repeated as soon as possible, and the time allowed to lapse between the first four of five analyses must be very much shorter than was the case this time.

50. *Deterioration of juice on keeping.*—When visiting the Refinery at Samalkot in January last, I was asked if in my opinion it would be safe to ship carefully limed juice in properly sterilized iron drums for some distance to the factory. As this question is one of general interest, the following experiments were made to test this point. Juice which was protected as carefully as is possible in ordinary milling practice from being infected with ferments was, after being analysed, set aside in clean glass vessels. Half of it remained unlimed, the other was limed as described in para 34 on page 9 of this report. After a specified time both samples were analysed again. The results are given in the following table :—

TABLE No. VII.

Table showing the amount of fermentation of cane juice, as indicated by an increase in the percentage of glucose, on standing.

No. of juice	Treatment	Analysed after standing hrs.	Glucose per cent	Date of analysis
318	Unlimed	Fresh	·67	April 18
	Do	7	·82	Do
	Limed	7	·75	Do
324	Unlimed	Fresh	·80	Do
	Do	6	·91	Do
	Do	20	2·9	Do 19
	Limed	6	·83	Do 18
	Do	20	6·2	Do 19
332	Unlimed	Fresh	·73	Do 20
	Do	6	1·10	Do
	Limed	6	·74	Do
458	Unlimed	Fresh	·61	Do 26
	Do	14	2·04	Do 27
	Do	19	3·03	Do
	Limed to neutrality	14	1·93	Do
	Do	19	3·50	Do
	Over-limed	14	·99	Do
	Do	19	3·00	Do

51. Taking these results as a whole, there appears to be a slight tendency on the part of limed samples to keep better than the unlimed juice. But as far as these results go, this pre-

serving action is not sufficient to justify any one to rely on it in helping to prevent the juice from fermentation. Further experiments in this direction are given in the following table :—

TABLE No. VIII.

No. of juice	How treated	Analysed after standing							Date
		Fresh juice; glucose per cent	Three hours; glucose per cent	Six hours; glucose per cent	Nine hours; glucose per cent	Thirteen and one-fourth hours; glucose per cent	Seventeen and one-fourth hours; glucose per cent	Nineteen and three-fourth hours; glucose per cent	
452	Unlimed	·54	·56	·61	·61	...	...	...	April 26
453	Limed to neutrali ...	·54	·54	·58	·61	...		...	Do
454	Over-limed	·54	·54	·56	·61	...	...	...	Do
455	Unlimed ...	·37	...	...	...	·42	·62	1·00	May 8 and 9
456	Limed to neutrality ...	·37	...	...	...	·40	·57	·80	Do
457	Over-limed	·37	...	...	...	·37	·44	·61	Do

In these experiments it was desired to follow the changes taking place in the juice for the best part of a day. To the unlimed and limed samples were added a third into which more than double the amount of lime used for the ordinary "limed" sample had been put. This is described as "over-limed." The first set of three samples were milled one morning and analysed every three hours. The next set of three samples Nos. 455, 456 and 457 were milled in the evening, analysed immediately and allowed to stand overnight. They were analysed again next morning after standing 13¼ hours, 17¼ hours and 19¾ hours. The results show a tendency for the overlimed sample to keep better than the others. But in none of the cases has fermentation been entirely stopped for even twenty hours, and it is doubtful if as satisfactory results as this could be got on an average in general practice. But the experiments are sufficiently encouraging to justify their being continued.

52. *Resume.*—On the whole this year's experiments with sugar-cane and with its manufacture indicate that there is a danger in sending sugar-cane or its juice for distances requiring more than a few hours in transit. The results when making raw centrifugal sugar are so encouraging that it appears likely that even comparatively small houses are likely to help the sugar industry very much.

53. Regarding the opinion that jaggory gets darker in colour the heavier the juice is limed, the experiments show that when the juice is in sufficiently limed the jaggory gets darker with the addition of lime, but that a sufficiently limed sample of juice gives a jaggory lighter in colour than one from juice limed to one-half this extent. The following directions given last year deserve repetition :—

"When boiling jaggory, the greatest care should be taken—

(1) to lime the juice to neutrality as indicated by litmus paper,

(2) to use no earthenware pots,

(3) to wash the mill and all (metal) pots and vessels at least once a day *before* stopping work,

(4) to boil the juice as soon after it is milled as possible,

(5) to see that the rollers of the mill are set as close together as possible," and, added to this,

(6) mill the cane as soon after cutting as possible.

COFFEE.

54. *Analyses.*—On page 10 of the Fourth Annual Report are given the results of the analyses of six samples of coffee in which it appears that in a general way the price paid for the coffee decreased with the specific gravity, the nitrogen, phosphoric acid and the potash. On page 11 is stated, "So far as the results go they are very satisfactory indeed. But the number of analyses is much too limited for drawing any conclusions." In the Fifth Annual

Report, pages 17 to 24, the continuation of that work has been reported. Fifty-one widely different samples collected by the United Planters' Association of Southern India were tested in regard to their specific gravities. These results bear out the results obtained with the specific gravities the previous year. But the further analyses of the samples indicate no relation existing between the price realized in the London market and the contents of either nitrogen or phosphoric acid or potash, and the sentences quoted above from the Fourth Annual Report have proved amply justified. As the analyses are not quite finished, as some further determinations of some of the organic substances of the coffee are to be made if time permits, and as the analyses so far made are not of any immediate practical value in determining the quality of coffee, the detailed results will not be published until the work has advanced further than it has at present. It is sufficient for the present to note that the total nitrogen, total phosphoric acid and total potash are not an index of quality.

55. *Manurial experiments.*—On pages 6 to 9 in the Fourth Annual Report are given the results of plot experiments with manures on coffee. On experimental fields No. 1 and No. 2 the experiments have been continued for another two years with practically the same results. In both fields an unmanured plot still heads the list when taking the average of all the years the experiments have been going on. Mr. Denne and Mr. Harris who have conducted, very carefully, the experiments referred to above, have kindly consented to continue them. The amount and nature of fertilizers used, the arrangement of the plots and the results obtained up to 1903, are given in the report referred to above; and as the results since 1903 only serve to confirm the previous results, it is not necessary to give them here. They will, however, be published at some future time. The results obtained so far simply indicate that on these plots the manures applied have not acted. It is simply a coincidence that in both cases an unmanured plot has given the best average results. In Mr. Harris's field which contains two unmanured plots the average of the second of these plots is practically the worst. It is fortunate, however, that in all the experiments an unmanured plot heads the list. The results could not have been interpreted nearly as easily if the unmanured plots had given on an average a result which in its turn had been an average, and they might have been absolutely misleading if they had happened to give as persistently the poorest returns as they happened to have given the best. But if these results are taken to indicate that on these particular plots all the manure applied since the experiments were begun have for some at present unknown reason, failed to give any practical results the interpretation is very safe and very conclusive. As these results have been obtained on two fields it is not unreasonable to suppose that there is a chance of a similar thing happening on other fields.

56. But experiments from only two experimental fields even when conducted for five years cannot of course give *conclusive* results. These experiments cannot therefore be taken to show that coffee has been over-manured in the past and do not prove that if these fields had not been manured at all for five years, the results would have been as good as they would have been if they had been very heavily manured. But they *do* indicate that there is still something to learn about the manuring of coffee, and that our present treatment is not necessarily the most economic, and they state as plainly as they can that any one anxious to save unnecessary expenditure, would do well to join in this line of experiments to see if it is not possible to reduce expenditure in manures. That we cannot indefinitely crop any piece of land without returning to it at least part of the plant food removed by the crop appears reasonable to all of us. But if we consider the comparatively small amount of plant food removed in 5 cwts. of cleaned coffee, the comparatively rich nature of the soil required for coffee, the fact that at Rothamsted a continuous crop of wheat has been grown on one field for considerably over half a century and is still producing a respectable crop, and that the only actual experiments made with manures on coffee (experiments where the crop from each individual manured plot has been weighed and compared with that produced on a similar adjoining plot which has not been manured) have shown no marked result in favor of the manures applied, it is, I believe, time to be serious about manurial experiments with coffee, and make sure that the good results we believe to have noticed after the application of some one or other manure applied are really due to the manure used and not traceable to some other unexpected cause. For if it were possible to reduce expenses without injuring in any way the returns, the sooner we knew it the better. I therefore strongly urge that a large number of manurial experiments be started with coffee and continued for a considerable time. It is waste to apply more manure than necessary, especially manures like poonacs which are not retained very long by the soil. On the other hand it would be suicidal to manure less than required; and as practice, no matter how long established, does not necessarily prove a point unless accompanied by experiments, we must make all the experiments possible to test, and if possible, improve our practice. It is reasonable to suppose that in the experiments now carried out, the unmanured plot will drop behind some time. But the fact that this "some time" has not yet arrived ought to make every one interested in coffee anxious to determine whether this is simply due to an accident, or local circumstances, or is caused by some generally existing conditions.

FERTILIZERS.

57. In addition to the analyses made this year, the maximum, minimum and average composition of some of the more important fertilizers, as found in this Laboratory during previous years, has been given to enable those interested in the subject to get a clearer idea of the range in composition which may be expected in those fertilizers in this part of India. The

fertilizers analysed this year were, with the exception of ashes, principally analysed to enable firms dealing in fertilizers to give a guarantee with their fertilizers as to their composition.

TABLE No. IX.

Poonacs.

No.	Substance	Nitrogen analyses of previous years			Analysis, 1904-05		Location
		Average percentage	Minimum percentage	Maximum percentage	Nitrogen percentage	Phosphoric acid percentage	
	White castor	6·53	5·56	8·69	..	...	
55	Do	...	...	...	4·76	...	
69	Do	...	...	...	6·35	2·62	Bangalore
	Kurdi	4·83	3·92	6·43	..	...	
206	Do	...	...	...	8·30	...	
207	Do	...	...	...	4·86	...	Hubli
	Neem (Melia Azadi)	5·01	4·43	5·99	...	...	Do
58	Do	...	...	...	4·12	...	
	Honge (Pongamia glabra) ...	3·81	3·59	4·01		...	
70	Do	...	...	...	3·88	·99	Bangalore
	Ippe (Bassia latifolia)	2·97	1·80	4·14	...	...	

58. *White castor.*—No. 69 is a white castor poonac taken from a large heap, and as might be expected represents fairly well an average sample of good average white castor. The firm in question excluded as far as possible all samples which appeared adulterated. Sample No. 55 is, I believe, also taken from, "bulk," but is, as will be noticed, very poor, having a lower percentage of nitrogen than any other sample analysed in this Laboratory before. It came from outside of Mysore and indicates the necessity of consumers insisting on a guarantee as to composition.

59. *Kurdi* Samples Nos. 206 and 207 were simply analysed to check the results obtained in one of the laboratories recently established, to enable its owner to guarantee the composition of the fertilizers sold by him. Sample No. 206 is so abnormally rich in nitrogen that I feared there was something wrong with the determination, but it was all right. The minimum percentage of nitrogen given for Kurdi is 3·22 notwithstanding that an old sample of unknown source gave less than 3 per cent of nitrogen. In no other fertilizer does there appear to be so much range in quality as in Kurdi, or safflower cake.

60. The figures connected with the other varieties of oil-cake given above, require no special mention.

61. As to the difference in the intrinsic value of different samples of oil-cakes of the same kind, I refer to page 24 of the Fifth Annual Report, page 15 of the Faurth Annual Report and page 12 of the Third Annual Report of this Department.

62. *Bone and fish.*—The following table giving the composition of dried fish and bone meal require no special comment. A variety of fish called bungara gave the maximum results, and a small variety of fish called by the sender sardines gave the poorest returns. The sample of bone meal giving the poorest results was undoubtedly adulterated.

TABLE No. X.

Bone and fish.

No.	Substance	Results of previous years						Analysis, 1904-05		Locality
		Nitrogen			Phosphoric acid					
		Average	Minimum	Maximum	Average	Minimum	Maximum	Nitrogen	Phosphoric acid	
	Dried fish ...	6·01	3·96	8·72	5·03	1·73	7·51	...	...	
56	Do ...	...	...	...	...	...	...	4·48	4·53	West Coast
57	Do ...	...	...	...	...	...	...	6·33	3·61	Do
	Bone meal ...	3·58	2·52	4·04	22·38	18.62	23·36	...	...	
71	Do ...	...	...	...	...	...	...	3·77	22·83	Bangalore

FERTILIZERS OTHER THAN THE ABOVE.

63. The number of inquiries received as to whether the acid sulphate of potash formed as a by-product at the Cordite factory at Wellington could be used as a fertilizer, shows that there is a strong desire to make use of any substance likely to be valuable for manurial purposes. Unfortunately the small percentage of lime found in most South Indian soils makes it highly probable that this acid sulphate of potash is not likely to be of much value as a manure. It is more likely to be a poison to plant life. But so far no experiments have been made with it to test these points. Probably if mixed with an equal quantity, or more, of freshly burned lime, it would do very well as a manure; but as lime is rather expensive and as its value as an indirect fertilizer would, to a very large extent, be lost if used in this way, this recommendation has not found favor, and no experiments have, as far as I know, been made to see if such a mixture would be satisfactory. Messrs. Stanes & Co. of Coimbatore have mixed this acid sulphate with bone meal in the hope that the acid sulphate would act on the bone in something like the same manner as sulpheric acid would do. But as both the acid sulphate and the bone meal were in the form of a powder, they did not have much chance to react on each other. However from the analysis of this mixture it is evident that some reaction has taken place, for in this mixture were found 8·09 per cent of phosphoric acid soluble in a neutral solution of ammonium citrate (the re-agent used for determining the "available phosphoric acid" in fertilizers), and as owing to the increase in bulk due to the addition of the acid sulphate of potash, the total phosphoric acid was reduced from about 23 per cent to 13·58 per cent. This mixture had 59·57 per cent of its total phosphoric acid in an available form. As none of the untreated samples of bone meal which had been used for this mixture accompanied it, another sample of bone meal was analysed and found that in it 27·16 per cent of the total phosphoric acid were in an available form. If the two samples of bone are nearly alike, and it is reasonable to suppose this, there can be no doubt that the acid sulphate, even in the form of a powder, had some action on the bone meal; and as the injurious effects of the acid sulphate are reduced in exactly the same proportion as the sulphate acts on the bone meal, it is quite possible that if the acid sulphate is applied in the form of a concentrated solution to finely powdered bone meal, its injurious action as a fertilizer may be turned to good account in making the bone meal more available. Messrs. Stanes & Co. of Coimbatore have kindly promised to make this experiment, and the produced sample will be analysed and some pot-culture experiments made with it in this Department.

64. *Trichi phosphate.*—As a large number of inquiries were received in regard to this phosphate, a sample was analysed notwithstanding that, as it is a rock phosphate, it is not likely to be of much use as a manure unless converted into superphosphate. It was ground very fine and practically all passed through the standard (100 meshes to an inch) sieve. But as will be seen from the table given below, practically none of the phosphoric acid was soluble in a neutral solution of ammonium citrate, and therefore judged by the European and American standard, practically none of it is available.

65. *Bone char.*—The bone char, a refuse from the sugar refinery, contained a comparatively large amount of nitrogen for a substance of this kind. But as bone char is considered to be practically inert unless treated with sulphuric acid and transformed into super-phosphate, the amount of nitrogen cannot make it a fertilizer which could be recommended. Moreover the nitrogen contained in it is likely to be itself very inert.

66. *Aloe fibre refuse.*—A sample of dried aloe fibre refuse sent from the Shevaroy Hills was found to contain 1·64 per cent of nitrogen. This is not sufficient to justify it being carried long distances when in tended to be used as a fertilizer. It is not far short in nitrogen of the poorest of sample of ippe poonac analysed here. But as it is fairly bulky and possibly the nitrogen in it is not quite as available as that in poonacs, it cannot be considered as a commercial fertilizer. Its bulky pithy nature are, however, likely to make it an excellent mulch where such can be applied. And as a mulch is in itself of great value, the aloe fibre refuse will have to be considered as a useful by-product of the aloe fibre industry if used in the neighbourhood of the factory.

67. *Ashes.*—Considerable quantities of wood ashes are used annually for manurial purposes. These are generally prepared specially for that purpose by burning brushwood; and the heat produced by the burning is not utilized in anyway. Some of these ashes are, however, so poor in potash that it cannot possibly pay to make them even if the wood is value-less and there is little other work for the coolies at the time. Nos. 60 and 62 in the following table are of this nature. Both of them contain less than 1 per cent of potash soluble in hydrochloric acid, and of this amount not much more than half is soluble in boiling water, and therefore readily available. A ton of these ashes would therefore be worth less than Rs. 3. Samples Nos. 30 and 32, which are also produced from mixed woods, are very much better in quality, being more than twice as valuable; but even these are low in potash. Both samples Nos. 63 and 64 are, however, valuable samples of ashes. But the best of these analysed thus far is No. 33, a sample of bamboo ashes received from Coorg. But, strange to say, probably owing to the light weight of these ashes, they have generally been considered to be of but little value. Some other wood ashes such as Lantana will be analysed soon. If their percentage of potash should happen to be high it may help in solving the problem of stopping the Lantana invasion. It is a pity, however, to see wood other than Lantana burned solely for the sake of the ashes.

TABLE No. XI.

Ashes and miscellaneous fertilizers.

No.	Substance	Nitrogen	Phosphoric acid	Phosphoric acid soluble in amonium citrate	Potash	Potash soluble in water	Lime	Loss on ignition	Insoluble residue
	Bone meal	4·04	23·34	6·34	...	...	...	...	...
188	Bone meal treated with ab out its own weight of dry acid sulphate of potash.	..	13·58	8·09	...	...	..	..	...
204	Trichi ph osphate ...	...	25·51	0·38	...	...	43·86	...	...
37	Bone char	1·21	27·80	...	...	...	...	...	...
31	Crude saltpetre	3·63	...	...	...	16·71	...	...	...
54	Refined do	12·95	...	...	...	39·58	...	...	...
187	Aloe fibre refuse	1·64	...	...	...	...	...	...	...
29	Ashes	...	1·15	..	...	...	11·51	26·90	45·54
60	Ashes, mixed wood ...	...	...	...	·93	0·61	..	15·54	...
62	Do do ...	...	...	...	·78	0·40	...	..	...
63	Do bratty	...	...	...	4·82	2·53	...	...	...
64	Do chetty burners ...	...	...	...	3·47	1·90	...	...	...
30	Ashes, mixed wood ...	...	0·57	...	2·32	...	17·43	20·24	44·50
32	Do do ...	...	1·45	...	1·97	...	29·04	28·94	24·40
33	Do bamboo	...	2·54	...	5·40	...	...	...	...

MISCELLANEOUS.

68. *Purifying water with alum.*—At the request of the Deputy Chief Engineer, some observations were made in regard to the amount of alum required to clear the water of the Hessarghatta tank. It is of course difficult to state exactly when the settling of the suspended matter began and there is also some difficulty, in a simple observation like this, to find out when the water is practically clear, as a considerable quantity of the fine suspended matter clings to the side of the glass vessel. But for practical purposes the figures given below are accurate enough, and may be of help to those wishing to clear water for domestic purposes. The water was very turbid. But two grains per gallon or about one ounce for 200 gallons was all that was required to practically clear the water in seven hours and was almost as effective as four times that quantity; but it is the minimum quantity which gave good results. One and a half grains per gallon proved to be inefficient unless the water could be allowed to stand quietly for a day or more.

TABLE No. XII.

Alum grains per gallon	Began to settle in hours	Practically clear in hours
8	2	5
5	3	5
4	3	5
3	3	5
2	3	7
1½	5	27
1	96	...
0	...	...

69. *Salt.*—Two samples of sea salt were analysed. The one contained 84 per cent of salt, the other 92 per cent. The poorer sample contained, in addition to the salt 1·64 per cent of magnesia, and some lime, potash and sulphuric acid (of course all combined). The better sample contained 0·77 per cent of magnesia, and of the other impurities mentioned above, it contained about half the quantity found in the poorer salt. The remainder of the impurities were sand and other insoluble matter and water.

70. *Famine food.*—Twenty-two other samples of famine foods were sent in, and in all of them the nitrogen has been determined. On the average the nitrogen content is a little higher than that of those analysed last year though both the highest and lowest percentage of nitrogen is very much lower than last year. The highest was 2·70 per cent found in a sample of

Kannay leaves sent by the Amildar of Malur; but there were several other samples nearly as rich. The poorest contained only 0·05 per cent of nitrogen. It was a sample of Godirasadagadde flour sent by the Deputy Commissioner of Shimoga. But no other sample received had anything approaching this low percentage of nitrogen.

71. As samples of famine foods are still being sent in to the Laboratory, and as some other constituents, for example, crude fibre, fat or ether extracts, and amide nitrogen, have to be determined to judge of the food value of these famine foods, the results obtained this year and those already published last year on pages 26-28 of the Fifth Annual Report will be published together when the analytical work regarding the nutritive value of these foods has been finished. If some senior officer in the Mysore service well acquainted with these famine foods and the peculiarity of the people who might have access to these foods in time of famine could be deputed to write a bulletin on these foods in conjunction with the Agricultural Chemist when the analytical work is finished, that bulletin would doubtlessly be of much more value than the bare statement of the analytical results would make it.

A. LEHMANN,
Agricultural Chemist.

RAINFALL TABLE OF THE MYSORE STATE

For the month of March 1906.

Rainfall Table of the Mysore State

Meteorological Division	District	Station	1	2	3	4	5	6	7	8	9	10	11	1	13	14	15	16	17	18	19	20	21
MYSORE	Bangalore	Bangalore ...	...	...	...	...	...	...	...	...	...	...	...	...	...	...	...	...	...	0·61	...	...	...
		Hoskote ...	...	...	...	...	...	...	...	...	...	...	...	...	...	...	...	...	...	...	...	...	...
		Dodballapur ...	...	...	...	...	...	...	...	...	...	...	...	...	...	...	...	...	...	...	...	...	...
		Nelamangala ...	...	...	...	...	...	...	...	...	...	...	...	...	...	...	...	...	...	0·15	...	...	...
		Kankanhalli ...	...	...	...	...	...	...	...	...	...	...	...	...	...	...	...	...	...	...	...	...	...
		Magadi ...	...	...	...	...	...	...	...	...	...	...	...	...	...	...	...	...	...	...	...	...	...
		Closepet ...	...	...	...	...	...	...	...	...	...	...	...	...	...	...	...	...	...	...	...	...	...
		Anekal ...	...	...	...	...	...	...	...	...	...	...	...	...	...	...	...	...	...	...	...	...	...
		Devanhalli ...	...	...	...	...	...	...	...	...	...	...	...	...	...	...	...	...	...	0·22	...	...	...
		Channapatna ...	...	...	...	...	...	...	...	...	...	...	...	...	...	...	...	...	...	...	...	...	...
	Kolar	Kolar ...	...	...	...	...	...	...	...	...	...	...	...	...	...	...	...	...	...	...	...	...	...
		Bowringpet ...	...	...	...	...	...	...	...	...	...	...	...	...	...	...	...	...	...	...	...	...	...
		Chintamani ...	...	...	...	...	...	...	...	...	...	...	...	...	...	...	...	...	...	0·20	...	...	...
		Mulbagal ...	...	...	...	...	...	...	...	...	...	...	...	...	...	...	...	...	...	...	...	...	...
		Sidlaghatta ...	...	...	...	...	...	...	...	...	...	...	...	...	...	...	...	...	...	0·10	...	...	...
		Chikballapur ...	...	...	...	...	...	...	...	...	...	...	...	...	...	...	...	...	...	0·34	...	...	...
		Bagepalli ...	...	...	...	...	...	...	...	...	...	...	...	...	...	...	...	...	...	0·60	...	...	...
		Goribidnur ...	...	...	...	...	...	...	...	...	...	...	...	...	...	...	...	...	...	...	...	...	...
		Malur ...	...	...	...	...	...	...	...	...	...	...	...	...	...	...	...	...	...	...	...	...	...
		Srinivaspur ...	...	...	...	...	...	...	...	...	...	...	...	...	...	...	...	...	...	...	...	...	...
		Gudibanda ...	...	...	...	...	...	...	...	...	...	...	...	...	...	...	...	...	...	0·23	...	...	...
	Tumkur	Tumkur ...	...	...	...	...	...	...	...	...	...	...	...	...	...	...	...	...	...	...	...	...	...
		Maddagiri ...	...	...	...	...	...	...	...	...	...	...	...	...	...	...	...	...	...	...	...	...	...
		Chiknayakanhalli	...	...	...	...	...	...	...	...	...	...	...	...	...	...	...	...	...	...	...	...	1·40
		Sira ...	...	...	...	...	...	...	...	...	...	...	...	...	...	...	...	...	...	...	...	...	1·15
		Gubbi ...	...	...	...	...	...	...	...	...	...	...	...	...	...	...	...	...	...	...	...	...	...
		Tiptur ...	...	...	...	...	...	...	...	...	...	...	...	...	...	...	...	...	...	...	...	...	...
		Pavagada ...	...	...	...	...	...	...	...	...	...	...	...	...	...	...	...	...	...	...	...	...	...
		Kunigal ...	...	...	...	...	...	...	...	...	...	...	...	...	...	...	...	...	...	...	...	...	0·04
		Koratagere ...	...	...	...	...	...	...	...	...	...	...	...	...	...	...	...	...	...	...	...	...	...
		Turuvekere ...	...	...	...	...	...	...	...	...	...	...	...	...	...	...	...	...	...	...	...	...	...
	Mysore	Mysore ...	...	...	...	...	...	...	...	...	...	...	...	...	...	...	...	...	...	...	...	...	1·13
		Chamrajnagar ...	...	...	...	...	...	...	...	...	...	...	...	...	...	...	...	...	...	...	...	...	...
		Seringapatam ...	...	...	...	...	...	...	...	...	...	...	...	...	...	...	...	...	...	...	...	...	0·66
		Hunsur ...	...	...	...	...	...	...	...	...	...	...	...	...	...	...	...	...	...	...	...	...	...
		Yedatore ...	...	...	...	...	...	...	...	...	...	...	...	...	...	...	...	...	...	...	...	...	...
		Heggaddevankote	...	...	...	...	...	...	...	...	...	...	...	...	...	...	...	...	...	...	...	...	...
		Gundlupet ...	...	...	...	...	...	...	...	...	...	...	...	...	...	...	...	...	0·33	...	...	...	...
		Nanjangud ...	0·20	...	...	...	...	...	...	...	...	...	...	...	...	...	...	...	...	...	...	...	...
		T.-Narsipur ...	...	...	...	...	...	...	...	...	...	...	...	...	...	...	...	...	0·08	...	...	...	...
		Malvalli ...	...	...	...	...	...	...	...	...	...	...	...	...	...	...	...	...	...	...	...	...	...
		Mandya ...	...	...	...	...	...	...	...	...	...	...	...	...	...	...	...	...	...	...	...	...	0·95
		Krishnarajpete ...	...	...	...	...	...	...	...	...	...	...	...	...	...	...	...	...	...	...	...	...	...
		Nagamangala ...	...	...	...	...	...	...	...	...	...	...	...	...	...	...	...	...	...	...	...	...	...
	Hassan	Hassan ...	...	...	...	...	...	...	...	...	...	...	...	...	...	...	...	...	...	...	...	...	...
		Manjarabad ...	...	...	...	...	...	...	...	...	...	...	...	...	...	...	...	...	...	...	...	...	...
		Arkalgud ...	...	...	...	...	...	...	...	...	...	...	...	...	...	...	...	...	...	...	...	...	...
		Belur ...	...	...	...	...	...	...	...	...	...	...	...	...	...	...	...	...	...	...	...	...	...
		Channarayapatna	...	...	...	...	...	...	...	...	...	...	...	...	...	...	...	...	...	...	...	...	...
		Arsikere ...	...	...	...	...	...	...	...	...	...	...	...	...	...	...	...	...	...	...	...	...	...
		Holé-Narsipur ...	...	...	...	...	...	...	...	...	...	...	...	...	...	...	...	...	...	...	...	...	...
		Alur ...	...	...	...	...	...	...	...	...	...	...	...	...	...	...	...	...	...	...	...	...	...
	Shimoga	Shimoga ...	...	...	...	...	...	...	...	...	...	...	...	...	...	...	...	...	...	...	...	...	...
		Channagiri ...	...	...	...	...	...	...	...	...	...	...	...	...	...	...	...	...	...	...	...	...	...
		Honnali ...	...	...	...	...	...	...	...	...	...	...	...	...	...	...	...	...	...	...	...	...	...
		Shikarpur ...	...	...	...	...	...	...	...	...	...	...	...	...	...	...	...	...	...	...	...	...	...
		Sorab ...	...	...	...	...	...	...	...	...	...	...	...	...	...	...	...	...	...	...	...	...	...
		Sagar ...	...	...	...	...	...	...	...	...	...	...	...	...	...	...	...	...	...	...	...	...	...
		Nagar ...	...	...	...	...	...	...	...	...	...	...	...	...	...	...	...	...	...	...	...	...	...
		Tirthahalli ...	...	...	...	...	...	...	...	...	...	...	...	...	...	...	...	...	...	...	...	...	...
		Kumsi ...	...	...	...	...	...	...	...	...	...	...	...	...	...	...	...	...	...	...	...	...	...
	Kadur	Chikmagalur ...	...	...	...	...	...	...	...	...	...	...	...	...	...	...	...	...	...	...	...	...	...
		Kadur ...	...	...	...	...	...	...	...	...	...	...	...	...	...	...	...	...	...	...	...	...	...
		Tarikere ...	...	...	...	...	...	...	...	...	...	...	...	...	...	...	...	...	...	...	...	...	...
		Koppa ...	...	...	...	...	...	...	...	...	...	...	...	...	...	...	...	...	...	...	...	...	...
		Mudgere ...	...	...	...	...	...	...	...	...	...	...	...	...	...	...	...	...	...	...	...	...	...
		Yedahalli ...	...	...	...	...	...	...	...	...	...	...	...	...	...	...	...	...	...	...	...	...	...
		Sringeri ...	...	...	...	...	...	...	...	...	...	...	...	...	...	...	...	...	...	...	...	...	...
	Chitaldrug	Chitaldrug ...	...	...	...	...	...	...	...	...	...	...	...	...	...	...	...	...	...	...	...	...	...
		Challakere ...	...	...	...	...	...	...	...	...	...	...	...	...	...	...	...	...	...	...	...	...	...
		Hiriyur ...	...	...	...	...	...	...	...	...	...	...	...	...	...	...	...	...	...	...	...	...	...
		Holalkere ...	...	...	...	...	...	...	...	...	...	...	...	...	...	...	...	...	...	...	...	...	...
		Davangere ...	...	...	...	...	...	...	...	...	...	...	...	...	...	...	...	...	...	...	...	...	...
		Molakalmuru ...	...	...	...	...	...	...	...	...	...	...	...	...	...	...	...	...	...	...	...	...	...
		Jagalur ...	...	...	...	...	...	...	...	...	...	...	...	...	...	...	...	...	...	...	...	...	...
		Hosdurga ...	...	...	...	...	...	...	...	...	...	...	...	...	...	...	...	...	...	...	...	...	...
		Harihar ...	...	...	...	...	...	...	...	...	...	...	...	...	...	...	...	...	...	...	...	...	...

GOVT. OF H. H. THE MAHARAJA OF MYSORE,
GEN. AND REV. SECRETARIAT,
Bangalore, the 16th April 1906.

for the month of March 1906.

22	23	24	25	26	27	28	29	30	31	No. of rainy days in Mar. 1906	No. of rainy days in Mar. 20 years' average	Total rainfall for the month of Mar. 1906	Total rainfall for the month of Mar. 20 years' average	Heaviest rainfall for the month of Mar. 1906	Total rainfall from 1st Oct. to 31st Mar. 1906	Total rainfall from 1st Oct. to 31st Mar. 20 years' average	Station	District	Meteorological Division
...	...	...	...	...	...	...	...	...	...	1	0·1	0·61	0·80	0·61	11·36	12·27	Bangalore ...	Bangalore	MYSORE
...	...	...	...	...	...	...	...	...	...	...	0·5	...	0·30	...	6·98	8·91	Hoskote ...		
...	...	...	...	...	...	...	...	...	...	...	0·8	...	0·49	...	6·82	9·86	Dodballapur ...		
...	...	...	...	...	...	...	...	...	...	1	0·5	0·15	0·14	0·15	4·45	7·08	Nelamangala ...		
...	...	...	...	...	...	...	...	...	...	...	0·6	...	0·21	...	4·72	8·13	Kankanhalli ...		
...	...	...	...	...	...	...	...	...	...	...	0·9	...	0·36	...	3·99	9·57	Magadi ...		
...	...	...	...	...	...	...	...	...	...	...	0·6	...	0·33	...	8·05	9·02	Closepet ...		
...	...	...	...	...	...	...	...	...	...	...	0·9	...	0·41	...	7·62	10·35	Anekal ...		
...	...	...	...	...	...	...	...	...	...	1	0·6	0·22	0·25	0·22	7·82	6·27	Devanhalli ...		
...	...	...	...	...	...	...	...	...	...	...	0·1	...	0·10	...	6·64	13·20	Channapatna ...		
											Average	0·10							
...	...	...	...	...	...	...	...	...	...	...	0·8	...	0·45	...	9·53	10·55	Kolar ...	Kolar	
...	...	...	...	...	...	...	...	...	...	...	0·9		0·61	...	5·62	15·31	Bowringpet ...		
...	...	...	...	...	...	...	...	...	...	1	0·6	0·20	0·24	0·20	9·64	12·28	Chintamani ...		
...	...	...	...	...	...	...	...	...	...	...	0·6	...	0·45	...	9·70	11·42	Mulbagal ...		
...	...	...	...	...	...	...	...	...	...	1	0·6	0·10	0·63	0·10	7·16	10·12	Sidlaghatta ...		
...	...	...	...	...	...	...	...	...	...	1	1·0	0·34	0·55	0·34	7·35	10·63	Chikballapur ...		
...	...	...	...	...	...	...	...	...	...	1	0·4	0·60	0·22	0·60	8·36	7·12	Bagepalli ...		
...	...	...	...	...	...	...	...	...	...	...	0·4	...	0·14	...	4·83	8·15	Goribidnur ...		
...	...	...	...	...	...	...	...	...	...	...	0·4	...	0·35	...	9·11	8·73	Malur ...		
...	...	...	...	...	...	...	...	...	...	...	0·6	...	0·40	...	8·44	9·24	Srinivaspur ...		
										1	0·2	0·23	0·07	0·23	8·62	8·76	Gudibanda ...		
											Average	0·13							
...	...	...	...	...	...	...	...	...	...	...	0·9	...	0·34	...	6·63	10·30	Tumkur	Tumkur	
...	...	...	...	...	...	...	...	...	...	...	0·5	...	0·24	...	6·57	6·39	Maddagiri		
...	...	...	...	...	...	...	...	...	...	1	0·8	1·40	0·30	1·40	5·45	7·43	Chiknayakanhalli		
...	...	...	...	...	...	...	...	...	...	1	0·5	1·15	0·13	1·15	5·55	5·04	Sira		
...	...	...	...	...	...	...	...	...	...	...	0·6	...	0·26	...	5·92	9·85	Gubbi ...		
...	...	...	...	...	...	...	...	...	...	...	0·5	...	0·23	...	3·70	12·14	Tiptur ...		
...	...	...	...	...	...	...	...	...	...	...	0·5	...	0·23	...	3·01	6·51	Pavagada ...		
...	...	...	...	...	...	...	...	...	...	...	0·5	0·04	0·29	0·04	5·05	8·89	Kunigal ...		
...	...	...	...	...	...	...	...	...	...	...	0·7	...	0·24	...	7·49	6·98	Koratagere ...		
...	...	...	...	...	...	...	...	...	...	...	0·2	...	0·11	...	5·60	9·11	Turuvekere ...		
											Average	0·26							
...	...	...	...	...	...	...	...	...	...	1	1·1	1·13	0·58	1·13	8·43	10·86	Mysore	Mysore	
...	...	...	...	...	...	...	...	...	...	...	0·9	...	0·45	...	9·02	8·11	Chamrajnagar ...		
...	...	...	...	...	...	...	...	...	...	...	1·1	0·06	0·52	0·06	10·61	10·57	Seringapatam ...		
...	...	...	...	...	...	...	...	...	...	...	1·0	...	0·47	...	5·71	9·64	Hunsur ...		
...	...	...	...	...	...	...	...	...	...	...	0·7	...	0·38	...	6·95	9·99	Yedatore		
...	...	...	...	...	...	...	...	...	...	...	0·6	...	0·24	...	6·23	7·07	Heggaddevankote		
...	...	...	...	...	...	...	...	...	...	1	1·3	0·33	0·45	0·33	9·78	8·69	Gundlupet ...		
...	...	...	...	...	...	...	...	...	...	1	0·6	0·20	0·21	0·20	5·95	9·38	Nanjangud ...		
...	...	...	...	...	...	...	...	...	...	...	1·0	0·08	0·38	0·08	7·97	10·53	T.-Narsipur ...		
...	...	...	...	...	...	...	...	...	...	...	0·9	...	0·46	...	6·46	8·48	Malvalli ...		
...	...	...	...	...	...	...	...	...	...	1	0·9	0·95	0·35	0·95	6·07	11·89	Mandya ...		
...	...	...	...	...	...	...	...	...	...	...	0·9	...	0·39	...	7·15	10·41	Krishnarajpete...		
											0·5	...	0·13	...	7·80	11·62	Nagamangala ...		
											Average	0·21							
...	...	...	...	...	...	...	...	...	...	...	1·1	...	0·43	...	8·85	10·70	Hassan	Hassan	
...	...	...	...	...	...	...	...	...	...	...	1·4	...	0·59	...	9·48	11·91	Manjarabad ...		
...	...	...	...	...	...	...	...	...	...	...	0·6	...	0·15	...	12·60	7·54	Arkalgud ...		
...	...	...	...	...	...	...	...	...	...	...	0·9	...	0·32	...	12·50	9·14	Belur ...		
...	...	...	...	...	...	...	...	...	...	...	0·5	...	0·55	...	6·82	8·72	Channarayapatna		
...	...	...	...	...	...	...	...	...	...	...	0·5	...	0·16	...	6·83	10·63	Arsikere ...		
...	...	...	...	...	...	...	...	...	...	...	1·0	...	0·67	...	7·73	11·33	Holé-Narsipur ...		
											...	...	...	...	8·43	...	Alur ...		
											Average	...							
...	...	...	...	...	...	...	...	...	...	...	1·1	...	0·48	...	8·33	7·98	Shimoga	Shimoga	
...	...	...	...	...	...	...	...	...	...	...	0·4	...	0·21	...	5·06	5·99	Channagiri ...		
...	...	...	...	...	...	...	...	...	...	...	0·5	...	0·34	...	5·54	6·67	Honnali ...		
...	...	...	...	...	...	...	...	...	...	...	0·6	...	0·36	...	4·97	3·57	Shikarpur ...		
...	...	...	...	...	...	...	...	...	...	...	0·2	...	0·09	...	5·44	6·30	Sorab ...		
...	...	...	...	...	...	...	...	...	...	...	0·3	...	0·16	...	6·91	6·48	Sagar ...		
...	...	...	...	...	...	...	...	...	...	...	0·1	...	0·04	...	10·95	10·69	Nagar ...		
...	...	...	...	...	...	...	...	...	...	...	0·5	...	0·45	...	5·35	13·55	Tirthahalli ...		
...	...	...	...	...	...	...	...	...	...	...	0·4	...	0·18	...	4·84	6·22	Kumsi ...		
											Average	...							
...	...	...	...	...	...	...	...	...	...	...	1·7	...	1·16	...	10·59	12·39	Chikmagalur	Kadur	
...	...	...	...	...	...	...	...	...	...	...	0·6	...	0·32	...	3·53	9·06	Kadur ...		
...	...	...	...	...	...	...	...	...	...	...	0·5	...	0·23	...	7·80	7·71	Tarikere ...		
...	...	...	...	...	...	...	...	...	...	...	0·7	...	0·26	...	10·25	10·59	Koppa ...		
...	...	...	...	...	...	...	...	...	...	...	1·1	...	0·34	...	16·64	14·19	Mudgere ...		
...	...	...	...	...	...	...	...	...	...	...	0·6	...	0·25	...	7·22	9·10	Yedahalli ...		
...	...	...	...	...	...	...	...	...	...	...	...	...	...	...	13·78	...	Sringeri ...		
											Average	...							
...	...	...	...	...	...	...	...	...	...	...	0·5	...	0·17	...	6·78	8·25	Chitaldrug	Chitaldrug	
...	...	...	...	...	...	...	...	...	...	...	0·5	...	0·10	...	2·17	5·00	Challakere ...		
...	...	...	...	...	...	...	...	...	...	...	0·2	...	0·08	...	3·83	5·93	Hiriyur ...		
...	...	...	...	...	...	...	...	...	...	...	0·3	...	0·06	...	10·16	7·76	Holalkere ...		
...	...	...	...	...	...	...	...	...	...	...	0·6	...	0·23	...	9·16	5·13	Davangere ...		
...	...	...	...	...	...	...	...	...	...	...	0·1	...	0·13	...	3·40	7·35	Molakalmuru ...		
...	...	...	...	...	...	...	...	...	...	...		...	...	...	2·62	4·89	Jagalur ...		
...	...	...	...	...	...	...	...	...	...	...	0·5	...	0·15	...	10·32	8·47	Hosdurga ...		
...	...	...	...	...	...	...	...	...	...	...	...	...	...	...	10·44		Harihar ...		
											Average	...							

Average for the State, 0·09

By Order,

B. K. VENKATA VARADA IYENGAR,
Secy. to Govt., Gen. & Rev. Dept.

The Mysore Gazette.

Vol. 41.] PUBLISHED BY AUTHORITY. [No. 17.

BANGALORE, THURSDAY, APRIL 26, 1906.

☞ Separate paging is given to the Parts in order that they may be filed as distinct compilations.

CONTENTS.

PART I.—Notifications by the Government of His Highness the Maharaja of Mysore.

PART II.—Notifications by the Government of India; The Hon'ble the Resident in Mysore; Chief Judge; Survey and Inam Superintendent; Comptroller; Chief Engineer; Mysore State Railway; Amrut Mahal Department; Inspector-General of Registration; Senior Surgeon; District and Sessions Judges; Sub-Judges; Deputy Commissioners of Districts; Forest Officers; Presidents, Bangalore and Mysore City Municipalities; Season Reports; Mortuary and Meteorological Statements; Postal Notices; Civil and Military Station Notifications, &c.

PART III.—Legislative Measures and Rules thereunder.

PART IV.—Official Papers.

PART I.

Notifications by the Government of His Highness the Maharaja of Mysore.

GENERAL AND REVENUE.

No. G. 5128—*G. M.* 38-05-46, *dated* 18—19*th April* 1906.

The marginally noted old tents belonging to Government will be sold by public auction near the Executive Engineer's Office of the Bangalore Division at 4 P.M., on Monday the 21st May 1906. The highest bidder in each case should remove the articles purchased on cash payment in full on the spot.

2 Double pole tents.
4 Hill tents.
2 Single pole tents.
1 Sleeping pal.
2 Swiss Cottage tents.
6 Rowties.
1 Double rowty.
5 Necessary tents.

Total ... 23 tents.

No. 10884—*L. B.* (237-05)-8, *dated* 23*rd April* 1906.

Under Section 6 of the Land Acquisition Regulation, VII of 1894, the undermentioned lands will be acquired by Government for public purpose, *viz.*, for a road; and under clause (*c*) of Section 7, the Assistant Commissioner in charge of the Mulbagal group of taluks may be authorised to take order for its acquisition :—

District—Kolar.
Taluk—Mulbagal.
Hobli—Avani.
Village—Jodi Devarayasandra.
Name of khatedar—Laki Ramiah.
Survey No.—Village site.
Extent required—10 ft. in front of his house.

Boundaries—
West—Laki Ramiah's house.
North—Vacant site attached to Venkataramappa's house.
East—T. Ramiah's house.
South—Laki Ramiah's house.

No. 10863—*L. B.* (421-05)-2, *dated* 19*th*—21*st April* 1906.

Mr. Shama Udapa is appointed as a member of the Nagar Union Panchayat in the Shimoga District, *vice* Mr. Manjaya Udapa, deceased.

No. 10975—*Ml.* (276-05)-10, *dated* 24*th April* 1906.

In Government Notification No. 10534—Ml. 276-05-8, dated the 11th April 1906, published in page 182 of Part I of the *Mysore Gazette* of the 19th April 1906, read "in the Harihar Municipality" after the words "opening out roads, etc."

No. 10940—*L. B.* (423-05)-2, *dated* 21*st*—24*th April* 1906.

Mr. Fakirappa is appointed a member of the Malebennur Union Panchayat in the Harihar Sub-Taluk, *vice* Mr. Karegowdara Devirappa, deceased.

No. R. 13350—*L. R.* 609-05-3, *dated* 16*th April* 1906.

Under Section 6 of the Land Acquisition Regulation, No. VII of 1894, it is hereby declared that the lands described hereunder are required for a public purpose, *viz.*, for forming a new village, Hiranyapalli in the Chintamani Taluk, Kolar District, and under Sections 7 and 3 (*c*) of the said Regulation, the Assistant Commissioner in charge of Chintamani group of taluks is authorised to take order for the acquisition of the said lands :—

District / Taluk / Hobli / Village	Name of khatedar	Survey No.	Dry, wet or garden	Total extent	Assessment	Extent now required		Boundaries			
						Extent	Assessment	East	West	North	South
				A. G.	Rs. a. p.	A. G.	Rs. a. p.				
Kolar / Chintamani / Chintamani / Hiranyapalli	Chikkanaga ...	58/2	Dry ..	2 28	4 12 0	2 28	4 12 0	Bachanna's field	Kuruba Kempa's field	Survey No. 89, Honnurappa	Kolar Muniappa's field.
	Honnurappa ..	89	Dry ...	3 21	7 0 0	3 21	7 0 0	Do ...	Chintamani Munia's field	Tope ...	Chikkanaga.

No. Fl. 6701—*S. & A.* 517-05-4, *dated* 24*th April* 1906.

As applications from officials for alteration of the dates of birth given by them on first entertainment in the public service on the ground that the dates originally given were incorrect are becoming frequent, the Government of His Highness the Maharaja hereby direct that all officials desiring to have their dates of birth altered should do so through their official superiors within three months from the date of this notification. Applications received thereafter will not be entertained.

2. It should be distinctly understood that no alteration of date of birth will be permitted as regards persons appointed to the public service in future.

No. R. 13584—*L. R.* 612-05-3, *dated* 20*th*—21*st April* 1906.

Under Section 6 of the Land Acquisition Regulation, No. VII of 1894, it is hereby declared that the land described hereunder is required for a public purpose, *viz.*, for opening a cart-track; and under Sections 7 and 3 (*c*) of the said Regulation, the Assistant Commissioner in charge of Honnali group of taluks is authorised to take order for the acquisition of the said land :—

District—Shimoga.
Taluk—Channagiri.
Village—Pandavamatti.
Name of khatedar—Karibasaiya and Marala Siddaiya.
Survey No.—106—1.
Total extent—11 acres and 35 guntas.
Assessment—Rs. 13.
Extent now required—275 yds. length and 5 yds. breadth.

Boundaries—
East—Portion of S. No. 107 and a path leading from Pandavamatti to Rajagondanahalli.
West—S. Nos. 101 and 102.
North—Path leading from Pandavamatti to Rajagondanahalli.
South—Portions of S. Nos. 100 and 107.

CIVIL APPOINTMENTS.

Heads of Departments and all other officers concerned are informed that Notifications in the Gazette are in future to be accepted as disposing of all references regarding leave, transfers, appointments, powers and other personal questions affecting Gazetted officers, as to which orders are gazetted by the Government in this Part of the Gazette, and that any subsidiary orders as to relief of their subordinates and the like, which such notifications necessitate, must be issued by them on receipt of the Gazette, as no other orders will be issued by Government.

No. J. 2932—*Cts.* 214-9, *dated* 20*th April* 1906.

In Notification No. J. 2563—Cts. 214-6, dated the 26th March 1906, printed at page 164, Part I of the *Mysore Gazette* dated the 29th idem, the words "the whole period being commuted into leave on medical certificate" shall be omitted.

No. G. 5185—*G. M.* 260-05-2, *dated* 20*th*—21*st April* 1906.

Under Article 188 of the Mysore Service Regulations, Mr. N. Venkatesa Iyengar, B.A., Chief Observer of the Central Observatory at Bangalore, is granted privilege leave for eight days, with effect from the 9th May 1906.

No. 10964—*Med.* (140-05)-8, *dated* 24*th April* 1906.

Mr. V. P. Sadasiva Rao, Honorary Sub-Assistant Surgeon, having availed himself, from the afternoon of the 4th February 1906, of the two months' privilege leave granted to him in Notification No. 8442—Med. 140-05-6, dated the 14th February 1906, and rejoined his duty in the Civil Hospital at Chikmagalur on the forenoon of the 26th March 1906, the unexpired portion of the leave is hereby cancelled.

No. R. 13463—*L. R.* 430-05-6, *dated* 19*th April* 1906.

Mr. M. A. Narayana Iyengar, B.A., B.L., Extra Assistant Commissioner in charge of the Hassan District Treasury, is granted three months' privilege leave from date of availment.

Mr. T. Dharmaraj Chetty, Amildar, is appointed to act as Extra Assistant Commissioner of the last class during the absence on leave of Mr. Narayana Iyengar. To join forthwith.

No. R. 13500—*Ft.* 185-05-2, *dated* 19—20*th April* 1906.

Under Article 188 of the Mysore Service Regulations, Mr. P. S. Govinda Rao, Sub-Assistant Conservator of Forests in the Shimoga District, is granted privilege leave of absence for fifteen days, with effect from the 1st May 1906 or date of availment.

No. R. 13526—*L. S.* 56-05-2, *dated* 19—20*th April* 1906.

Under Article 188 of the Mysore Service Regulations, Mr. J. L. Mackay, Assistant Superintendent, Mysore Revenue Survey, in charge of the Survey Head-quarters Office, is granted privilege leave of absence for three months, with effect from the 1st April 1906 or the subsequent date from which he may avail himself of it.

2. Mr. Yello Srinivasa Rao, Sub-Assistant Superintendent, Mysore Revenue Survey, is appointed to act as Assistant Superintendent during the absence of Mr. Mackay on leave or until further orders.

No. R. 13581—*L. R.* 47-05-16, *dated* 20*th*—21*st April* 1906.

Mr. M. Sadasiva Rao, B.A., B.L., Amildar of Arkalgud, having availed himself of the three months' sick leave granted to him in Notification No. R. 10381 - L. R. 47-05-10, dated the 3rd February 1906, from the 3rd January 1906 and returned to duty on the forenoon of the 12th March 1906 the unexpired portion thereof is hereby cancelled.

No. R. 13579—*L. R.* 47-05-15, *dated* 20*th*—21*st April* 1906.

Under Article 221 of the Mysore Service Regulations, Mr. M. Sadasiva Rao, Amildar of the Arkalgud Taluk, is granted extraordinary leave without allowances for fifteen days, with effect from the 24th April 1906.

2. During the above period Muhamed Khan, the Sheristadar of the taluk, will be in charge of the taluk.

No. R. 13625—*L. R.* 174-04-14, *dated* 21*st*—23*rd April* 1906.

Under Article 188 of the Mysore Service Regulations, Mr. D. Ahobala Rao, Acting Amildar of the Shikarpur Taluk, was granted privilege leave of absence for ten days, with effect from the 10th November 1904.

No. Fl. 6702—*Gen. Fin.* 301-05-2, *dated* 24*th April* 1906.

Mr. M. N. Krishna Rao, Assistant Secretary, is granted twelve days' privilege leave from the 1st May 1906.

No. R. 13531—*L. R.* 630-05-1, *dated 20th April* 1906.

The Government of His Highness the Maharaja are pleased to make the following appointments:—

1. Mr. A. Rangaswami Iyengar, B.A., B.L., Judge of the Chief Court of Mysore, to be Revenue Commissioner in Mysore, *vice* Mr. T. Ananda Rao appointed First Councillor.

2. Mr. M. Kantharaj Urs, B.A, to be a Deputy Commissioner of the 3rd class, *vice* Mr. K. P. Puttanna Chetty, appointed Second Councillor.

3. Mr. C. Srikanteswara Iyer, B.A., B.L., Assistant Commissioner, to officiate as Deputy Commissioner, *sub pro tem*, during the absence of Mr. Kantharaja Urs on leave or until further orders. To be posted to the Kolar District and to join duty forthwith.

No. R. 13624—*L. S.* 43-05-2, *dated 21st—23rd April* 1906.

Mr. K. G. Shamanna, B.A., is confirmed as an Extra Assistant Commissioner of the 5th class, with effect from the 10th November 1905.

No. R. 13892—*L. R.* 604-05-4, *dated 25th April* 1906.

In modification of para 2 of Notification No. R. 13367—L. R. 604-05-2, dated the 16th April 1906, Mr. Parthasarathy Iyengar, Amildar, is posted to the Hunsur Taluk. To join forthwith.

2. C. R. Narayanasami Mudaliar, who was appointed to act as Amildar when Mr. Parthasarathy Iyengar was given leave, will revert as Deputy Amildar of French Rocks, and Srinivasiengar, now acting as Deputy Amildar of French Rocks, will revert to his post of Police Head-quarter Inspector of Bangalore.

No. R. 13891—*L. R.* 522-05-2, *dated 25th April* 1906.

Messrs. D. Subba Rao and S. Venkataramana Srouti, Amildars, who were temporarily promoted to the 2nd and 3rd class, respectively, under Notification No. R. 11609—L. R. 522-05-1, dated the 7th March 1906, owing to the acting appointment of Mr. T. Dharmaraj Chetty, acting 2nd Class Amildar, as Acting Extra Assistant Commissioner, will revert to their former grades from the date of Mr. Dharmaraj Chetty's reversion to his former post.

No. Fl. 7017—*L. R.* 477-05-4, *dated 25th April* 1906.

Mr. R. Nanasami Rao is appointed as an Extra Assistant Commissioner of the 5th class, with effect from the 31st March 1906. He will be Private Secretary to the Dewan.

The Petition Box kept at the Office of the General and Revenue Secretariat, Bangalore, will be cleared at 12 noon every day by the Secretary to Government, General and Revenue Department, and in his absence from Bangalore, by the Deputy Secretary.

By Order,
B. K. VENKATA VARADA IYENGAR,
Secy. to Govt., Gen. & Rev. Dept.

MUZRAI.

No. 4809, *dated 18th April* 1906.

Under Article 188 of the Mysore Service Regulations, Mr. L. Anantasami Rao, B.A., Secretary to the Government of His Highness the Maharaja of Mysore, Muzrai Department, is granted privilege leave of absence for one month, with effect from the 21st instant or from such other date as he may avail himself of it.

2. The Secretary to the Government of His Highness the Maharaja of Mysore, General and Revenue Department, will look after the duties of the Muzrai Secretary, in addition to his own, during the latter's absence on leave or until further orders.

By Order,
L. ANANTASAMI RAO,
Secy. to Govt., Muzrai Dept.

PUBLIC WORKS.

No. 378—2459, *dated 19th April* 1906.

Mr. V. H. Karve, L.C.E., Executive Engineer on special duty, is granted privilege leave of absence for fifteen days, with effect from the 24th instant or date of availing himself of the same.

No. 389—2586, *dated 24th April* 1906.

The privilege leave of absence for fifteen days granted to Mr. V. Rangaswamy Iyengar, B.C.E., Executive Engineer, Water Supply and Stores Division, in this office Notification No. 364—2379 of the 14th instant, is hereby extended by twenty-two days.

2. Assistant Engineer Mr. K. Srinivasa Iyengar will officiate as Executive Engineer during the absence on leave of Mr. Rangaswamy Iyengar.

By Order,
W. McHUTCHIN,
Secy. to Govt., P. W. Dept.

280

The Mysore Gazette.

Vol. 41.] PUBLISHED BY AUTHORITY. [No. 17.

BANGALORE, THURSDAY, APRIL 26, 1906.

PART II.

Notifications by Govt. of India, Resident, Chief Court, &c.

JUDICIAL DEPARTMENT.

IN THE CHIEF COURT OF MYSORE.

CIVIL SIDE.

Addendum et corrigendum dated 16th April 1906 to Rule of Practice, No. 111, dated 8th September 1902.

The Chief Court directs that the following additions and alterations be made in the said Rule :—

To Rule 9 shall be added "stamps received shall not be entered in Register No. XV except in the column of remarks, till the copies are ready for issue."

To Rule 12 shall be added "the stamps shall be affixed in the copying Department and the copies passed on to the clerk in charge of Register No. XV, who will after making the necessary entries in the Register cancel the stamps and endorse the serial number of the entry on the copy application."

"In the case of copies issued by the Central Records the stamps, before issue of copies, should be entered in a separate Register to be maintained for the purpose so as to secure an accurate record of stamps revenue from copies."

In the form of copyists' register prescribed by the said rule between the present columns, 16 and 17 shall be inserted a new column 17 with the heading "Value of Court fee stamps on copies credited in Stamp Register No. XV" with two sub-columns with the headings "(a) general or serial number in Register No. XV"; and "(b) value."

The present column 17 shall be numbered 18 with two new sub heads. "Amount of stamp refunded" and "Amount of fees refunded" and column 18 numbered as 19.

CIVIL SIDE.

Addendum et corrigendum dated 16th April 1906 to Rule of Practice No. 2, dated 12th June 1878.

The Chief Court directs that in the form of Register No. XIV, prescribed by the said Rule columns 24 to 33 be expunged and that for the form of Register No. XV, the following be substituted :—

REGISTER No. XV (CIVIL).

Daily Register of Court Fees in the Court of

Serial number	Nature of document and reference to connected case	Name of party or his lawyer presenting the document	Search fees	Process fees	Amount realized under Regulation, III of 1900, Schedule I, Articles 1 to 8	Amount realized under the same Schedule Nos. 9 to 11	Amount realized under Schedule II	Value of cancelled Court fee stamps on copies credited	Total fees	Initials of clerk to whom document is consigned with date	Remarks
1	2	3	4	5	6	7	8	9	10	11	12

Instructions—

(1) No column is provided for date which should be written across the columns in red ink.

(2) In column 5 the value of all stamps deposited on account of process fees whether the processes are issued or not should be entered and in the case of unused stamps which are destroyed, a note should be made against the entry in the remark column under the initials of the Judge as required by addendum dated 20th March 1903 to Rule of Practice No. 89.

(3) Similar note should also be made in the remark column in the case of stamps, the value of which is refunded.

(4) Where plaints and memoranda of appeals, &c., are returned or before registration rejected, a note to the effect should be made in the remark column with the date of return or rejection.

(5) The totals of columns 4 to 9 should be struck daily as well as monthly and annually.

V. A. RAJARATNA MUDALIAR,
Registrar.

FINANCIAL DEPARTMENT.

Circular No. 2084—T. A. 163, dated 9th April 1906.

To—All Heads of Departments and Deputy Commissioners of Districts.

Under Articles 528 (2) and (4) and Note (1) to Article 561 (ii) of the Mysore Service Regulations, Non-gazetted and Ministerial Officers of Government and menial servants of certain classes are entitled to draw their actual travelling expenses by road, subject to a maximum of a specified rate per every mile of road travelled. It would appear that in a large number of cases, Heads of Offices or Departments allow these officers or servants the maximum mileage rates admissible to them without reference to the actual expenditure. This is irregular and leads to correspondence and delay in passing the bills in audit. Countersigning Officers are therefore requested to carefully scrutinize all claims of Non-gazetted Officers and menials in the light of the above remarks and not to pass the maximum rates as a matter of course.

N. G. BASU,
Comptroller.

EXCISE DEPARTMENT.

SALE OF SEPARATE ARRACK SHOPS FOR 1906-07.

Notification No. 2213, dated 21st March 1906.

1. Notice is hereby given that the exclusive right of selling arrack in each of the separate shops specified in the appended schedule* for the twelve months beginning with 1st July 1906 and ending with 30th June 1907, will be put up to public auction at upset prices, by the respective Deputy Commissioners or by Revenue Assistant Commissioners or by Divisional Officers of the Excise Department or other Officers specially authorized by the Deputy Commissioners for the purpose, on the dates and at the Taluk Head-quarters or other places mentioned below, subject to the conditions hereinafter set forth. If the sales are not completed on abovenamed days, they will be continued on the next following days (close holidays excepted).

2. (*a*) Each bidder at the auction will deposit a sum of Rs. 60 for shops in the Kolar Gold Fields, Rs. 25 for those in the Mysore and Bangalore Cities and Rs. 10 for those in other places, or such other reasonable amount as may be fixed by the officer conducting the sale, previous to bidding. It will, if offered, be received at any time within three days prior to the date of sale, provided that the Government may, at any time, dispense with such initial deposit. The deposits made by unsuccessful bidders if not forfeited as hereinafter provided, will be returned at the close of the sale. The shops or group of shops will be knocked down to the approved highest bidder, subject to formal confirmation by the Deputy Commissioner, who will be at liberty to accept or reject any bid at his discretion without assigning reasons for the same. Such formal confirmation will, *unless revised by Government for special reasons*, be tantamount to an acceptance of the bid and will be necessary whether the sale be held by the Deputy Commissioner himself or by any other officer appointed by him. Parties intending to bid must attend either in person or by duly accredited agents. Should there be no bid above the upset price, for any shop singly, the officer conducting the sale may, in consultation with the Excise Divisional Officer, if present, club together more than one shop but not more than two in the District Head-quarter taluks and Kolar Gold Fields and six in other places or, if necessary, reserve shops for which there may be no bids, for disposal hereafter. He may, subject to formal confirmation of the Deputy Commissioner, sell the right in any particular case by means of tenders or by private negotiation. He may also lower the upset price at his discretion. The officer conducting the sale may at his discretion, and without assigning any reason, refuse to accept the bid of any person, on the ground that he has been convicted by a criminal court of such an offence, or has been guilty of such breach of the conditions of the license, or of a contract under the Excise Regulation or Opium Act, as to render him undesirable as a holder of a license, or on the ground that he is insolvent, or in order to prevent arrangements to the detriment of Government interests, or for any other valid reason.

(*b*) No shop shall be knocked down in the name of more than one person or of more than one company or firm duly represented. The selling officer shall refuse to register as a purchaser any one in whose name the bidding has not proceeded.

3. (*a*) The successful bidder shall, on the exclusive privilege being knocked down to him, at once, if so required by the selling officer, or otherwise at the close of the day's sale, further deposit a sum equal to one-twenty-fourth part of his bid for the year, that is to say, one-half of the monthly rent unless the initial deposit equals or exceeds two months' rent. Should he fail to do so, the deposit, if any, made by him under clause 2 (*a*) will be forfeited, and the privilege will be sold again on the above conditions, or otherwise disposed of at his risk, as the Deputy Commissioner or selling officer may determine.

(*b*) The person to whom a shop or group of shops has been knocked down and who has made deposits as provided above, shall be required to leave his address with the selling officer, in order that the confirmation of the sale may be communicated to that address by a notice, and he shall, within seven days after the service of the

* For Schedule see Supplement to the *Mysore Gazette*, dated 5th April 1906.

said notice by its presentation to himself or to any adult male member of his family at the place of said address or by its being affixed thereto or by its forwardal duly registered by post, pay at the Taluk Treasury concerned, such further sum as, with the former deposits, will make up an aggregate sum equal to two months' rent, and execute at the same time before the Amildar the necessary engagements and take out the necessary licenses, as hereinafter set forth.

4. (*a*) The deposit made under the preceding para shall be either in cash or in Government of India Securities duly endorsed in favor of the Deputy Commissioner. Provided that in cases where the monthly rent exceeds Rs. 10 (in lieu of a deposit of two months' rent as above), the Deputy Commissioner may, in his discretion, allow any purchaser to deposit one month's rent as above, and to furnish approved personal security for an amount equal to four months' rent. In all cases where the monthly rent does not exceed Rs. 10, a cash deposit equal to two months' rent shall invariably be taken, and no personal security shall be accepted. If, on enquiry subsequent to sale, the purchaser shall be found to be a foreigner having no property in the Mysore State, or to be of doubtful solvency, he may be required to deposit twice the prescribed sum or to get a surety or sureties, residents of and possessing property in the Mysore State, to execute a security bond for the due payment of *all moneys* that may become due by him under the terms of the contract.

(*b*) Should the initial deposit exceed the sum required to be deposited under clause 3 (*b*) or clause 4 (*a*), the excess will be refunded to the purchaser.

5. The purchaser shall execute an agreement in the prescribed form, binding himself and, unless exempted by the Deputy Commissioner by an order duly recorded, so much of his movable and immovable property as may be deemed sufficient by the Deputy Commissioner, to observe the conditions hereinafter set forth, as well as those specified in the license to be issued to him; and his surety or sureties, if any have been accepted, shall also execute a bond in the prescribed form binding himself or themselves and so much of his or their movable or immovable property as may be deemed sufficient by the Deputy Commissioner for the due fulfilment by the purchaser of the terms of the agreement. The agreement and the bond so executed shall be stamped at the expense of the purchaser. They shall also be registered at his expense when the amount secured is Rs. 100 and above.

6. If default is made in making the deposit or deposits or in executing the agreement or the security bond, if any, and in taking out licenses as aforesaid, the exclusive privilege shall be forthwith re-sold or otherwise disposed of by the Deputy Commissioner at the risk of the first purchaser, who shall forfeit to the Government any deposit or deposits already made by him, and shall further be liable to make good any loss caused by such re-sale or other disposal. He shall not be entitled to any gain accruing from the re-sale or other disposal, and he shall be debarred from bidding again for the same or for any other shop or group of shops. In the case of loss the forfeited deposits will be deducted from it and the remainder, if any, shall be recovered as if it were an arrear of land revenue. In the case of the purchaser's death after the confirmation of the sale, it will be binding on his heirs or assigns.

7. Re-sales or other disposal effected under para 6 will be at the risk of the defaulting bidder, who shall forfeit all gain; and in the event of a loss caused by re-sale or other disposal he shall make good the deficiency between the total amount payable for the whole period under the terms of the original sale and the total amount payable by the successful bidder at the re-sale or other disposal. In the latter case, the forfeited deposit shall be deducted from the loss arising from the re-sale or other disposal, and the remainder, if any, shall be recovered from the defaulter in the same manner as if it were an arrear of land revenue. Should, however, the forfeited deposit be greater than the loss by re-sale, the whole of such deposit shall be credited to Government.

8. The amount of rental, the consumption of arrack in each shop, etc., for several years past are specified in the appended schedule.

9. The license to be taken out under para 3 (*b*) above, shall be subject to the following conditions but nothing herein contained shall exempt the purchaser of the

privilege from liability to the penalties prescribed for breaches of the conditions set forth below though a formal license may not have been issued:—

(1) The amount for which the privilege has been purchased shall, if it exceeds Rs. 12 per annum, be payable into the local Taluk Treasury in equal monthly instalments commencing from July 1906. But where it does not exceed Rs. 12 per annum, it shall be paid in not more than three equal quarterly instalments. Each instalment shall be regarded as the rent for the month or quarter in respect of which it is payable. The licensee is not required to make any additional payment on account of local cess. Each month's or quarter's rent shall be payable on or before the 20th of the same month, or before the end of the quarter for which the instalment is due. If default is made, the Amildar may, with the sanction of the Deputy Commissioner, suspend, or declare by record in writing that the license is forfeited, and proceed to re-sell or otherwise dispose of the shop or group of shops as soon after the last day of the month or quarter as may be possible with effect from the date of issue of license to the new purchaser or from the date of other disposal. The officer who has power to suspend license may, however, at his discretion, allow sales to continue pending re-sale of other disposal of the privilege.

Note.—The licensee of a Jatra shop shall pay the rent thereof in full before the Jatra begins.

(2) The deposit made by the licensee shall be taken as security for the due performance of the conditions of the license and if not forfeited, credited or otherwise disposed of, shall be credited in payment of the instalments due in the last two months of the period of the lease. Provided, however, that where the shop or group of shops is re-sold or otherwise disposed of, the deposit shall, at the discretion of the Deputy Commissioner, be either forfeited or be appropriated towards the arrears due by the defaulter as well as towards the deficits, if any, arising from the re-sale or other disposal of the shop or group of shops. The balance of such arrears and deficits, if any, shall be recoverable from the licensee under the rules in force for the recovery of arrears of land revenue. No remission or abatement of the rent or compensation shall, on any account whatever, be claimable by the licensee.

(3) Interest at 6 per cent per annum shall be recoverable on all arrears from the date of default, and on deficits from the date of re-sale.

(4) The privilege conferred by the license extends only to the sale of arrack ordinarily of the strength of 20° under-proof and with the special permission of the Deputy Commissioner or other officer authorized by him to the sale of arrack of 30° U. P. In places where there are no shops for the vend of foreign liquors or where the foreign liquor shop-keepers do not undertake to sell double-distilled or rectified country spirits and special liquors such as Brandy, Whisky, Gin, etc., of such strength as may be fixed by the Excise Commissioner, manufactured at the Government Central Distillery, Bangalore, the holder of arrack shop license of approved character may, with the sanction of the Excise Commissioner, be permitted to sell the same in duly corked sealed bottles not to be drunk on the premises, at such prices as may be fixed by the Excise Commissioner, and subject to conditions otherwise applicable to the sale of arrack.

(5) The lease shall not be transferable by sale, gift or otherwise or be sub-rented except with the permission of the Excise Commissioner, nor if the Deputy Commissioner so orders may any agent be appointed for the management of any privilege without his previous approval. All engagements entered into by the agent shall be deposited with the Deputy Commissioner within one month from the date of execution.

(6) Application for resignation of shop or group of shops will be summarily rejected by the Deputy Commissioner.

(7) The manufacturers of arrack or double-distilled or rectified country spirits or other special liquors as well as the licenses of arrack Bonded Depots are prohibited from holding any interest in the retail vend of the abovementioned spirits or from employing any person who has such interest.

(8) The sale or transport of arrack by persons suffering from leprosy or any contagious disease and the employment of such persons in the shop are prohibited.

(9) The license-holder shall purchase from the Bonded Depots established molasses arrack at 8½ annas per gallon of 20° under-proof, jaggory arrack in duly corked sealed bottles at Rs. 1-6-6, and also special liquors referred to above, at such prices as may be fixed by the manufacturers.

(10) The licensee shall sell molasses arrack to the public at Rs. 6-6-0 per gallon of 20° under-proof (*i. e.*, at annas two per dram which is equal to 1—51st part of a gallon) and jaggory arrack at Rs. 1-3-10 per reputed quart bottle and at proportionate rates for lower strengths.

(11) The licensee of every shop in the Cities of Bangalore and Mysore shall pay a registration fee under the Municipal Regulations at the rate of Rs. (180) one hundred and eighty per annum in advance for the period of the license for his shop, and he shall pay a surcharge of (4) four annas per gallon on all arrack sold by him in excess of 55 gallons a month in each such shop.

(12) The above rates to be charged for molasses arrack, jaggory arrack, double distilled or rectified country spirits or other special liquors by the manufacturers and the above fees are in addition to excise duty, which shall be prepaid at the prescribed rate of Rs. 4-12-0 (including local cess) per gallon of 20° U. P. and proportionately for higher or lower strengths, before the removal of the liquor from a Bonded Depot established under the sanction of Government.

(13) The licensee shall pay the above duty and price into a Taluk Treasury or to a special shroff, if any, appointed on this behalf at the cost of Government, and located at the Taluk Cutcherry to receive such duty and price *daily* including Sundays and holidays or to such other officer as may be appointed by the Deputy Commissioner, and shall obtain a receipt in the prescribed printed form. On production of such receipt and an indent for the supply of the liquor covered by the receipt, the Bonded Depot-keeper shall issue the quantity of liquor equal to the amount of duty and price shown in the said receipt which will be forwarded to the Excise Commissioner's office under the endorsement of the Bonded Depot-keeper aforesaid, as to the date and hour when the liquor was issued. The Depot-keeper aforesaid shall issue a pass in the prescribed form for the transport of liquor from the Bonded Depot. He shall also issue sample bottles with the consignments in such manner as may be ordered by the Excise Commissioner.

(14) The licensee shall be bound to take over any liquor which may remain as stock in hand belonging to the out-going licensee on 1st July 1906, in the shop, paying him such compensation for the same as may be fixed by the Excise Commissioner.

(15) The licensee shall possess or use on any licensed premises only such standard measure as may, from time to time, be prescribed by the Excise Commissioner. The officers authorized to inspect licensed shops are empowered to enter and examine the premises, to test the measures in use and the liquor under sale and to call for and check the accounts kept in the shops.

(16) The licensee shall be bound by the provisions of the Excise Laws and rules in force and by any additional rules which may, from time to time, be prescribed under the Excise Laws, and if so required, deliver up his license for amendment or issue of a fresh one.

(17) The Deputy Commissioner may, whenever he thinks fit, direct shops to be closed, or permit transfer of shops from one place to another, provided the distance is not more than 200 yards, or direct new shops to be opened with the previous sanction of the Excise Commissioner.

(18) Persons who purchase group of shops may, with the special permission of the Excise Commissioner, who is at liberty to refuse it, and under a license by a competent authority open a depot and remove thereto liquor purchased from the Bonded Depot and issue therefrom the requisite supply to their shops.

(19) The licensee of shop or group of shops shall not, during the term of the license, have any interest in the exclusive privilege of vending toddy or foreign spirits or liquors or both within 5 miles from it, nor permit any person having interest in the exclusive privilege of vending toddy or foreign spirits or liquor or both within the said area, to hold any share or interest in his exclusive privilege of selling country liquor; nor shall he, during the term of his license, without the written permission of the Excise Commissioner, have any interest, direct or indirect, in any arrack farm in any districts of the Madras or Bombay Presidency under the British Government or any other Foreign State or Territory, or Civil and Military Station, Bangalore.

(20) An Inspection note book with the pages numbered consecutively for inspecting officers to enter their remarks shall be maintained and be handed over to the Excise Inspector in charge of the Range or any officer authorized by him to receive it on a receipt being given therefor.

(21) If the licensee shall be convicted on prosecution before a Magistrate of any offence against the Excise Regulation, or Opium Act or other law for the time being in force, which in the Deputy Commissioner's opinion renders him unfit to hold the license, it shall be lawful for the Deputy Commissioner to declare his license forfeited and sell or otherwise dispose of the privilege at the risk of the licensee.

(22) All sums payable by the licensee may be deducted from the amount of his deposit or recovered by attachment and sale of the property of the licensee or his surety, under any law for the time being in force for the recovery of arrears of land revenue.

(23) The license-holder or vendor or vendors shall not sell nor give any arrack exceeding one reputed quart to any individual to convey out of any licensed shop or premises without a valid permit.

(24) The shop-keepers shall not sell or give any arrack to any European non-commissioned officer, private or soldier, or to any European or Eurasian camp follower, or to any member of the families of any of the aforesaid persons, without the permission in writing of the Commanding Officer or of some person duly authorized by him in that behalf; nor to any European sailor, nor to any sepoy, member of the Police force or Excise staff or servant of a Railway Company, whilst on duty; nor to any European vagrant under escort of Police; nor to any child under fourteen years of age; nor to any insane person for consumption on the premises; nor shall they sell any arrack on credit.

(25) They (license-holder or vendor or vendors) shall not receive any articles whatsoever in barter or pledge. Payment for arrack shall be received by them in ready money only, and they shall be bound to give intimation of the offer of anything other than cash to the nearest Magistrate or Police Officer. They shall have no pecuniary dealings with any Excise Officer.

(26) The arrack kept in his shop, offered for sale and sold, shall be unadulterated and undiluted; and it shall be of the same quality and

strength as issued from the Bonded Depot. With all consignments from the Depot to the shop, sample bottles shall be taken in such manner as may be ordered by the Excise Commissioner.

(27) No consignments of arrack received at the shop, and which have been transported through British Territory, shall be opened before they have been verified by the officers authorized to do so.

(28) No water or other beverage, or liquor other than arrack of any quantity whatever shall be kept or sold in the shop in which arrack is sold, or on the person or in possession of the license-holder or vendor or any of his employees in the shop. No ingredients noxious to health shall be added to it either to increase its intoxicating power or for any other purpose. All officers authorized to inspect shops and depots are empowered to detain any liquor found unfit for consumption or use and the Excise Commissioner, all Deputy Commissioners, Deputy Excise Commissioner and Excise Assistant Commissioners are authorized to destroy such liquor.

(29) No robbers or thieves or disorderly or riotous persons or prostitutes or soldiers or others known or believed to be deserters shall be harboured in the shop, and gaming, disorderly conduct, etc., therein shall be prevented, and information of their resort shall be given to the nearest Magistrate or Police Officer. No person shall be harboured during night in any shop.

(30) The license-holder shall fix in a conspicuous place outside of his shop a board on which shall be legibly printed in local vernacular his name and the number of his license and the articles he is licensed to deal in and the current rate of sale; the license must be hung up in a conspicuous place within.

(31) True account of receipts and issues of liquor shall be maintained from day to day in ink in the prescribed form. The accounts and permits shall be in printed books which may be obtained form local Excise Officers on payment of cost price. Permits for liquor received and the counterfoils of permits issued must be carefully filed. The signing of blank permits for subsequent issue is prohibited. The accounts and counterfoils of permits shall be preserved and delivered to the local Excise Officer immediately after the close of the lease. They shall be produced when asked for by the Deputy Commissioner or any officer appointed by him or by an Excise Officer not below the rank of Excise Assistant Inspector. The licensee shall be bound to furnish such returns and information as may, from time to time, be required by the Deputy Commissioner or Excise Officer not below the rank of Excise Assistant Inspector.

(32) The amount of fees payable for the shops under Condition 11 above, shall, in the Towns of Bangalore and Mysore, be paid to the Officers appointed by the President, Municipal Commission, to receive the same.

(33) The following stock or such stock as the Excise Divisional Officer may consider sufficient to meet local requirements shall always remain on hand and not be trenched upon :—

	Arrack	Remarks
I At all District Head-quarters	2 Gallons	
II At all Taluk and Depot Kasabas...	1 Gallon	
III Village shops within five miles from Depot	½ Gallon	
IV Village shops more than five miles distant from Depot...	Stock equal to one day's sale for every ten miles from Depot and not less than the stock fixed for shops within five miles of the Depot.	

The shop shall be kept open during the authorized hours unless its temporary or permanent closure is authorized by the Deputy Commissioner.

(34) The shop shall be closed by *9 P.M., and not be opened before sunrise except on special permit in cases of festivals, etc. The Deputy Commissioner or Assistant Commissioner in charge of the taluk may direct that all shops for the sale of arrack on or adjacent to the line of march shall be closed whilst a detachment of European or Native soldiers is passing or encamped in the vicinity. The Government reserves the power to terminate the lease on public grounds on giving the licensee fifteen days' notice and awarding a reasonable compensation to the licensee. The licensee will have no claim to compensation or remission on account of any arrangements which may be made by Government in regard to Country Beer or other description of liquor than arrack.

(35) The sales should be conducted in a suitable building which shall have only one door, and no windows shall be allowed to the rear or ends of the building. The bar where the liquor is sold shall be opposite the entrance door and so situated that all persons inside can be seen by any one passing to and fro in the street, and no second room shall be allowed to or be kept open for customers.

(36) The right is reserved to the Deputy Commissioner to grant occasional licenses for the sale of liquor on the occurrence of fairs, festivals, etc., in places in the vicinity of which there are no regularly licensed shops. Such licenses shall ordinarily be granted to the shop-keepers who usually supply the locality. Their period shall not exceed fifteen days and the fee to be paid therefor shall be fixed at the Deputy Commissioner's discretion unless he decides to sell the same by public auction.

(37) If it comes to the licensee's knowledge that any person employed by him in the carriage or sale of arrack, commits any breach of the Excise Laws or of the engagements entered into by him, it shall be his duty to report the matter to the Deputy Commissioner, and comply with the directions of the Deputy Commissioner respecting the continued employment of such person.

(38) No person who has been convicted of a heinous offence under the Indian Penal Code shall be employed in the carriage or sale of liquor without the Deputy Commissioner's previous permission.

(39) In case of any breach of the above conditions either by the licensee or, with his connivance and privity, by any person in his employment, or in the event of the licensee neglecting to open his shop, or to carry on the business of his shop with due care and attention, it shall be competent to the Deputy Commissioner to impose upon the licensee a fine not exceeding Rs. 50 for every such breach or for such neglect, or, at the option of the Deputy Commissioner, to declare the money deposited with him forfeited, and to cancel the license and re-sell the shop or to otherwise dispose of it at the risk of the licensee, or to place the shop under the management of Government; and all loss thereby caused, together with all losses accruing to Government in consequence of the licensee's neglect to carry on his business with due care and attention and to open his shop on 1st July 1906, shall be made good by him. When a license is cancelled, the rent for the whole period of the shop shall become due at once. All such amounts of penalties and losses shall be recovered in the same manner as if they were arrears of land revenue.

(40) The imposition of a fine or the forfeiture of deposit or the cancellation of the license under the last preceding para, shall not be held to prevent the prosecution of the licensee or his agents or employees for any offence punishable under the Excise Laws or other law for the time being in force.

NOTE.—For continuing breaches of a license, continuing fines may be imposed.

* 9-30 P.M. in the City of Bangalore.

DATES OF SALE.

District	Taluk	Date
Bangalore.		May 1906
	Bangalore City	1
	Bangalore Taluk	2
	Anekal	4
	Hoskote	8
	Devanhalli	10
	Dodballapur	12
	Nelamangala	14
	Magadi	16
	Channapatna	19
	Kankanhalli	21
Kolar.		May 1906
	Goribidnur	3
	Bagepalli	7
	Chikballapur	9
	Sidlaghatta	11
	Chintamani	15
	Srinivaspur	17
	Mulbagal	19
	Kolar	21
	Malur	23
	*Kolar Gold Fields	25
	Bowringpet	26
Hassan.		May 1906
	Belur	1
	Manjarabad	3
	Arkalgud	7
	Hole-Narsipur	9
	Hassan	11
	Channarayapatna	14
	Arsikere	17
Kadur.		May 1906
	Kadur	19
	Tarikere	21
	†Yedahalli	23
	Koppa	25
	Mudgere	28
	Chikmagalur	31

District	Taluk	Date
Tumkur.		May 1906
	Kunigal	8
	Tumkur	10
	Gubbi	12
	Tiptur	16
	Chiknayakanhalli	19
	Sira	23
	Maddagiri	25
	Pavagada	28
Mysore.		April 1906
	Yedatore	24
	Hunsur	26
	Heggaddevankote	28
	Nanjangud	30
	Gundlupet	May 2
	Chamrajnagar	4
	Yelandur	7
	T.-Narsipur	9
	Malvalli	11
	Mandya	14
	Seringapatam	16
	Krishnarajpete	18
	Nagamangala	21
	Mysore City and Taluk	23
Shimoga.		May 1906
	Shimoga	4
	Tirthahalli	8
	Nagar	10
	Sagar	12
	Sorab	14
	Shikarpur	16
	Honnali	18
	Channagiri	21
Chitaldrug.		May 1906
	Hosdurga	8
	Holalkere	10
	Davangere	12
	Jagalur	15
	Molakalmuru	17
	Challakere	19
	Hiriyur	22
	Chitaldrug	25

* Gold Fields Magistrate's Court.

† Deputy Amildar's Office.

SALE OF DRUG SHOPS FOR 1906-07.

Notice No. 2215, dated 21st March 1906.

1. Notice is hereby given that the exclusive privilege of selling intoxicating drugs in each of the shops specified in the schedule* hereto appended, for the twelve months beginning with 1st July 1906 and ending with 30th June 1907, will be put up to public auction by the respective Deputy Commissioners or by Assistant Commissioners specially authorized by the Deputy Commissioners for the purpose, at the respective taluk or sub-taluk head-quarters, on the dates specified in the annexed statement, subject to the conditions hereinafter set forth.

2. Each bidder at the auction will deposit a sum of Rs. 5, or such other reasonable amount as may be fixed by the officer conducting the sale, previous to bidding, provided that the Government may at any time dispense with such initial deposit. Each shop will be knocked down to the approved highest bidder, subject to formal confirmation by the Deputy Commissioner, who will be at liberty to accept or reject the bid at discretion without assigning reasons for the same. Such formal confirmation will, *unless revised by Government*, be tantamount to an acceptance of the bid. Parties intending to bid must attend either in person or by duly accredited agents. No shop shall be knocked down in the name of more than one person or of more than one company or firm duly represented. The selling officer shall refuse to register as purchaser any one in whose name the bidding has not proceeded.

3. As soon as the auction is completed, the deposits made by the unsuccessful bidders and not forfeited as hereinafter provided, will be returned to them. As the auction proceeds, the person whose bid is accepted for each shop shall at once deposit a sum equal to $\frac{5}{8}$ths of a month's rent for that shop. Should he fail to do so, the deposit made by him under para 2 will be forfeited, the shop will at once be put up again on the above conditions, and he will be debarred from bidding again for the same or for any other shop.

4. The persons to whom the shops have been knocked down, and who have made deposits as provided in paras 2 and 3, shall also be required to leave his address with the sale conducting officer in order that the confirmation of the sale may be communicated to that address by a notice, etc., and he shall, within 7 days, after the service of the said notice by its presentation to the purchaser or any adult male member in the place of the said address or by its being affixed thereto or by its forwardal duly registered by post, pay at the Taluk Treasury concerned such further sum as, with the first and second deposits, will make up an amount equal to two months' rent of each shop knocked down to them; and shall take out licenses and execute a counterpart engagement, in the prescribed forms, on the conditions hereinafter set forth. On the failure of any person to make the deposit or to take out license or to execute the ccunterpart engagement, as aforesaid, the shop will be re-sold at the risk of such person, or if the auction hereby notified has already been completed, will be otherwise disposed of at the discretion of the Deputy Commissioner. In the case of the purchaser's death after the confirmation of the sale, it will be binding on his heirs or assigns.

5. Re-sales effected under para 4 will be at the risk of the defaulting bidder, who will forfeit all gain; and in the event of a loss by re-sale or other disposal he will make good the deficiency between the total amount payable for the whole period under the terms of the original sale and the total amount payable by the successful bidder at the re-sale or other disposal. In the latter case, the forfeited deposit will be deducted from the loss arising from the re-sale and the remainder, if any, will be recovered from the bidder in the same manner as if it were an arrear of land revenue. Should, however, the forfeited deposit be greater than the loss by re-sale, the whole of such deposit will be credited to Government.

6. The license to be taken out under para 4 above, shall be subject to the following conditions, namely :—

(1) The amount for which the privilege has been purchased shall be payable into the Taluk Treasury on the prescribed challan in equal monthly instalments commencing from July 1906; each instalment shall be regarded as the rent for the month in respect of which it is payable.

* For Schedule see supplement to the *Mysore Gazette*, dated 5th April 1906.

Each month's rent shall be payable on or before the 20th of the same month on the challan prescribed for the purpose. If such amount be less than Rs. 12, it shall be paid up in not more than three quarterly instalments commencing from 1st July 1906. The deposit of two months' rent made by the licensee, will be taken in payment of the rents due for the last two months of the period of the license. Failing payment by the 20th of the same month or before the end of the quarter for which the instalment is due, the Amildar may, with the sanction of the Deputy Commissioner by record in writing, suspend or cancel the license or order the forfeiture of all deposits made by the defaulter and proceed to re-sell or otherwise dispose of the shop at the defaulter's risk (as soon after the last day of the month or quarter as may be possible) with effect from date of issue of license to the new purchaser or from the date of other disposal. No remission or abatement of the rent shall, on any account whatever, be claimable by the licensee.

(2) The licensee shall purchase Ganja and Majum from any Bonded Depot at the rates of Re. 0-13-4 and Re. 0-5-4, respectively, per seer of 80 tolas; and shall pay the price to the Mutsaddi in charge of the Depot.

(3) The rates payable as above, shall be in addition to Excise duty, which shall be prepaid into the Taluk Treasury, or into any other Government Treasury with the permission of the Deputy Commissioner, at Rs. 3-6-8 per seer of Ganja and Re. 0-11-8 per seer of Majum, (including local cess).

(4) The Ganja sold by the licensee, shall be of good quality and unadulterated, and it shall be sold by him at Rs. 10 for a seer of 80 tolas of Ganja or annas 2 per tola of Ganja and of Rs. 1-10-8 for a seer of Majum; and the whole stock of Ganja and Majum on hand shall be kept in the licensed shop and not elsewhere on any pretext whatever, without special permission.

(5) The licensee shall use such scales and weights as may from time to time be prescribed by Government, and provide himself with the printed forms of accounts and permits or passes for transport of Drugs, which forms shall be purchased from local Excise Officers.

(6) The licensee shall be bound to take over any Drugs which may remain as stock in hand belonging to the out-going licensee on the 1st July 1906 in the existing shop, paying to the latter such compensation for the same as may be fixed by the Deputy Commissioner.

(7) The licensee shall be bound by the rules in force, and by such further rules as may be issued from time to time by Government. He shall not during the term of his license, without the written permission of the Excise Commissioner, have any interest direct or indirect in any intoxicating drug shop outside the Mysore State or in the Civil and Military Station.

(8) No female shall be employed in the sale of intoxicating drugs.

(9) The remaining terms and conditions shall be as set forth in the prescribed license.

7. In the case of any breach of the above conditions either by the licensee, or with his connivance and privity, by any person in his employment, or in the event of the licensee neglecting to open his shop or to carry on his business with due care and attention, it shall be competent to the Deputy Commissioner to impose upon the licensee a fine not exceeding Rs. 10 for every such breach or neglect, or at the option of the Deputy Commissioner to declare the money deposited with him forfeited, and to cancel the license and to re-sell or to otherwise dispose of the privilege at the risk of the licensee; and all loss thereby caused, together with the loss accruing to Government in consequence of the licensee not carrying on his business by opening his shop on 1st July 1906, shall be made good by him. When a license is cancelled, the rent for the whole period of the license shall become due at once, which shall be recovered together with all losses as if they were arrears of land revenue.

8. The penalties laid down in the last preceding clause shall not exempt the licensee or his employees from prosecution for any offence committed against the Excise laws or rules in force.

DATES OF SALE.

District	Taluk	Date
		May 1906
Bangalore	Bangalore City and Bangalore Taluk ...	1 & 2
	Anekal	4
	Hoskote	8
	Devanhalli	10
	Dodballapur	12
	Nelamangala	14
	Magadi	16
	Channapatna	19
	Kankanhalli	21
		May 1906
Kolar	Goribidnur	3
	Bagepalli	7
	Chikballapur	9
	Sidlaghatta	11
	Chintamani	15
	Srinivaspur	17
	Mulbagal	19
	Kolar	21
	Malur	23
	Kolar Gold Fields*	25
	Bowringpet	26
		May 1906
Hassan	Belur	1
	Manjarabad	8
	Arkalgud	7
	Hole-Narsipur	9
	Hassan	11
	Channarayapatna...	14
	Arsikere	17
		May 1906
Kadur	Kadur	19
	Tarikere	21
	Yedahalli †	23
	Koppa	25
	Mudgere	28
	Chikmagalur	31

District	Taluk	Date
		May 1906
Tumkur	Kunigal	8
	Tumkur	10
	Gubbi	12
	Tiptur	16
	Chiknayakanhalli	19
	Sira	23
	Maddagiri	25
	Pavagada	28
		April 1906
Mysore	Yedatore	24
	Hunsur	26
	Heggaddevankote...	28
	Nanjangud	30
	Gundlupet	May 2
	Chamrajnagar	4
	Yelandur	7
	T.-Narsipur	9
	Malvalli	11
	Mandya	14
	Seringapatam	16
	Krishnarajpete	18
	Nagamangala	21
	Mysore City and Taluk	23
		May 1906
Shimoga	Shimoga	4
	Tirthahalli	8
	Nagar	10
	Sagar	12
	Sorab	14
	Shikarpur	16
	Honnali	18
	Channagiri	21
		May 1906
Chitaldrug	Hosdurga	8
	Holalkere	10
	Davangere	12
	Jagalur	15
	Molakalmuru	17
	Challakere	19
	Hiriyur	22
	Chitaldrug	25

* Gold Fields Magistrate's Court.

† Deputy Amildar's Office.

SALE OF COUNTRY BEER TAVERNS IN THE BANGALORE CITY AND IN THE BOWRINGPET TALUK FOR 1906-07.

Notice No. 2216, dated 21st March 1906.

1. Notice is hereby given that the exclusive privilege of selling Country Beer or Porter in each of the taverns specified in the appended schedule,* for the twelve months beginning with 1st July 1906 and ending with 30th June 1907, will be sold by public auction on the dates and at the places mentioned in the annexed schedule by the Deputy Commissioner of the District concerned or other officer authorized by him.

2. The exclusive privilege will be put up to auction at the upset price fixed at Rs. 35 per hogshead of Beer or Porter which will be sold in the taverns at Bowringpet and the Kolar Gold Fields and at the upset price fixed for each of the taverns in the City of Bangalore by the officer conducting the sale with the previous sanction of the Excise Commissioner.

3. The manufacturers of Beer may bid for or purchase the taverns.

4. Each bidder at the auction shall deposit a sum of Rs. 250 for shops in Bowringpet Taluk and Rs. 100 for those in Bangalore or such other reasonable amount as may be fixed by the officer conducting the sale, previous to bidding. Each tavern will be knocked down to the approved highest bidder, subject to the formal confirmation by the Deputy Commissioner, who will be at liberty to accept or reject the bid at discretion, without assigning reasons for the same. Such formal confirmation will, unless revised by Government, be tantamount to an acceptance of the bid. Parties intending to bid must attend either in person or by duly accredited agents.

5. As soon as the auction is completed, the deposits made by the unsuccessful bidders and not forfeited as hereinafter provided, will be returned to them.

6. The persons to whom the taverns have been knocked down, shall be required to leave his address with the sale-conducting officer in order that the confirmation of the sale may be communicated to that address, and within seven days after service by the said notice by its presentation to the purchaser or any adult male member of the family at the place of said address or by its being affixed thereto or by its forwardal duly registered by post, deposit such further sum as, with the first deposit, will make up a total security of Rs. 500 for each tavern knocked down to them or such other reasonable amount as may be fixed by the Deputy Commissioner, according to the value of each tavern; and shall take out licenses and execute counterpart engagements, on the conditions hereinafter set forth. On the failure of any person to make the deposit or to take out license or to execute the counterpart engagement, as aforesaid, the tavern will be re-sold at the risk of such person, or if the auction hereby notified, has already been completed, will be otherwise disposed of at the discretion of the Deputy Commissioner. In the case of the purchaser's death after the confirmation of the sale, it will be binding on his heirs or assigns.

7. Re-sales effected under para 6 *supra*, will be at the risk of the defaulting bidder, who shall forfeit all gain; and in the event of a loss by re-sale or other disposal he shall make good the deficiency between the total amount payable for the whole period under the terms of the original sale and the total amount payable by the successful bidder at the re-sale or by disposal otherwise. In the latter case, the forfeited deposit shall be deducted from the loss arising from the re-sale or other disposal, and the remainder, if any, shall be recovered from the bidder in the same manner as if it were an arrear of land revenue. Should, however, the forfeited deposit be greater than the loss by re-sale or other disposal, the whole of such deposit shall be credited to Government.

8. The license to be taken out under para 6 above, shall be subject to the following conditions, namely :—

(1) The privilege conferred by the license extends to the sale of Country Beer or Porter brewed on the Nilgiris in breweries which may be approved of by the Government or by Messrs. Meakin & Co., Kirkee, or by Messrs. Abraham and Gangadhara Chetty & Co., Bangalore, or in any other Brewery approved by Government.

* For Schedule see supplement to the *Mysore Gazette*, dated 5th April 1906.

(2) Each tavern shall be maintained in or close to the existing tavern as described in the schedule hereto appended.

(3) The amount payable for each month on account of the number of hogsheads of Beer or Porter sold, shall be paid into the Taluk Treasury in the first week of the following month, on the challan prescribed for the purpose. The security deposit shall be taken towards the amount due for the last two months of the period of the lease. Failing payment as above, the Deputy Commissioner shall at once proceed to recover the arrears together with interest at 6 per cent, under the rules in force for the collection of land revenue. No remission or abatement of the Government dues shall, on any account whatever, be claimable by the licensee.

(4) The licensee shall further pay a duty of two annas for every gallon of Country Beer or Porter purchased by him, together with local cess at one anna per rupee.

(5) The consignment of Country Beer or Porter purchased by the licensee, shall be sent direct from the Brewery to the Amildar of the Taluk. The letter of advice covering the consignment shall be in duplicate, the original being sent to the Amildar of the Taluk, and the duplicate to the Excise Commissioner. On the duty together with local cess at the abovementioned rate being paid by the licensee on the prescribed challan, the Amildar shall allow the licensee to remove the consignment to his tavern upon a pass signed by the Amildar or other officer authorized on this behalf.

(6) The licensee of every tavern at the Bangalore City shall pay a registration fee under the Municipal Regulation, at the rate of Rs. 180 per annum in advance for the period of the license for his tavern.

(7) The licensee shall use such measures as may from time to time be prescribed by Government, and provide himself with the printed forms of accounts and permits or passes for transport of Beer or Porter, which forms shall be purchased from local Excise Officers.

(8) The licensee shall be bound to take over any Beer or Porter which may remain as stock in hand belonging to the out-going licensee on the 1st July 1905 in the existing tavern, paying to the latter such compensation for the same as may be fixed by the Excise Commissioner.

(9) This lease shall not be transferable by sale, gift, mortgage or otherwise without the previous sanction of the Excise Commissioner.

(10) The Vendor shall equally with the license-holder be responsible in the penalties herein set forth for breach of any of the conditions of the license.

(11) He shall sell Beer or Porter of approved quality. It may be sold to be drunk on the premises up to one reputed quart bottle at a time. It may be sold to be removed off the premises upon the prescribed special passes up to one Imperial gallon (4 seers).

(12) He shall not sell or give Beer or Porter in any quantity whatever directly or indirectly to any European or non-commissioned officer or private or soldier, nor to any European or East Indian woman connected with or related to, men of these classes, nor allow him, her, or them, to drink Beer or Porter in his premises or grounds; he shall not permit drunkenness or disorderly behaviour in his shop or premises, and shall not suffer any gambling whatsoever therein, and shall not knowingly permit prostitutes or persons of notoriously bad character to meet or remain therein; he shall not wilfully harbour or conceal therein soldiers or others knowing or having reason to believe such soldiers or others to be deserters; he shall give information of suspicious characters to the Magistrate or Police Officer; and he shall not sell or give Beer or Porter to any Police Officer, Railway servant, or Excise Officer, whilst on duty or to insane person.

(13) He shall fix in a conspicuous place outside of his shop a board on which shall be legibly painted his name, Vendor's name, the number of his shop, and the article he is licensed to deal in.

(14) He shall not receive any articles whatsoever in barter or pledge and payment for Beer or Porter shall be made in ready money only at one and a-half rupee per imperial gallon and proportionately for fractions thereof.

(15) The Beer or Porter sold under this license shall contain 75 per cent of malt or any of the preparations of malt and 3 lbs. of good Kent hops per hogshead, and shall be of the same quality and density as purchased from the Brewer, without dilution or adulteration. The original gravity of the Beer wort shall not exceed 1070 at 60° Fahrenheit. The Beer or Porter sold shall not contain more than 8 per cent alcohol by volume. The licensee will be bound to pay duty, together with local cess, at the prescribed rate per gallon of proof spirit on all alcohol in the Beer or Porter in excess of 8 per cent by volume, besides being liable for prosecution. Samples of such Beer or Porter shall be sent duly bottled from the Brewery or tavern for examination and test whenever required by the Excise Department.

(16) Any Magistrate having local jurisdiction, or any officer acting under his warrant, or any Abkari or Excise officer shall be allowed entry to the shop at any hour to test the Beer or Porter on the premises, and examine the shop accounts, which it shall be the duty of the License-holder and Vendor to keep and produce. Such accounts shall be true and correct, and written up daily in the prescribed forms. All condemned Beer shall be destroyed.

(17) He shall close his shop by 9 P.M., and not open it before sunrise except on special permit in cases of Native festivals, etc.

(18) Beer brought for the Commissariat Department and rejected by the Military or other Departments, shall not, under any circumstances, be forwarded for sale in the tavern.

(19) The shop shall have only one door, and no window be allowed to the rear or ends of the building; the bar, where the liquor is sold from, shall be opposite to the entrance door, and so situated that all persons inside can be seen by any one passing to and fro in the street; and no second room shall be allowed to be kept open for customers.

(20) The licensee shall be bound by the rules in force, and which may be issued from time to time by Government.

9. In the case of any breach of the above conditions either by the licensee, or with his connivance and privity by any person in his employment, or in the event of the licensee neglecting to open his tavern or to carry on his business with due care and attention, it shall be competent to the Deputy Commissioner to impose upon the licensee a fine not exceeding Rs. 10 for every such breach or neglect, or at the option of the Deputy Commissioner, to declare the money deposited with him forfeited, and to cancel the license and to re-sell the privilege or to otherwise dispose of it at the risk of the licensee; and all loss thereby caused, together with the loss accruing to Government in consequence of the licensee not carrying on his business by opening his tavern on 1st July 1906 shall be made good by him. When a license is cancelled, the rent for the whole period of the lease shall become due at once, which shall be recovered together with all losses as if they were arrears of land revenue.

10. The penalties laid down in the last preceding clause shall not exempt the licensee or his employees from prosecution for any offence committed against the Excise Laws in force.

BEER SCHEDULE FOR THE YEAR 1906-07.

Name of Taluk	Serial No. of tavern	Situation of the tavern		Names of the present license-holders	Consumption					Rental					License fee payable on each Hogshead of 54 gallons per highest bid				Place of sale	Date of sale	Remarks
			Locality		1901-02.	1902-03.	1903-04.	1904-05.	1905-06.	1901-02.	1902-03.	1903-04.	1904-05.	1905-06.	1902-03.	1903-04.	1904-05.	1905-06.			
1	2	3	4	5	6	7	8	9	10	11	12	13	14	15	16	17	18	19	20	21	22
					Hogs	Hogs	Hogs	Hogs	Hogs	Rs.	Rs.	Rs.	Rs.	Rs.	Rs.	Rs.	Rs.	Rs.			
Bangalore	1	42	Mysore road	Rangaswamy Mudaliar.	49	30	...	..	...						...	...	...	...	Bangalore Taluk Cutcherry	1st and 2nd May 1906	
Do	2	385	Arlepet tank road	Momaudi Pille ...	...	...	..	...	...	1400	2,200	...	...	...	...	...	...	...			
Do	3	2	Avenue road, Yelahanka gate ...	Do	...	...	...	..	...						...	...	...	...			
Bowringpet ..	1	...	Robertsonpet	Punyakoti Mudaliar ...	...	432	445	90	78·32	...	..	...	..	..	47	56	63	61	Gold Fields Magistrate's Court	25th May 1906	
Do	2	...	Bowringpet	Do	...	44	24	6	5·22	...	...	...	..	...	43	50½	55	46			

SALE OF TODDY SHOPS FOR 1906-07.

Notification No. 2214, dated 21st March 1906.

1. It is hereby notified that the exclusive privilege of selling toddy in each shop or group of shops specified in the appended Schedule,* for one year, beginning with 1st July 1906 and ending with 30th June 1907, will be put up to public auction at upset prices by the respective Deputy Commissioners or by Revenue Assistant Commissioners or Divisional Officers of the Excise Department or other officers specially authorized by the Deputy Commissioners for the purpose, on the dates mentioned below, and at the respective Taluk or Sub-Taluk Kasabas, and, except as hereinafter provided, will be knocked down to the bidder offering the highest amount of rent above those prices. If the sales are not completed on the abovenamed days, they will be continued on the next following days (close holidays excepted). Should there be no bids for any shops singly, the officer conducting the sale shall be at liberty to revise, when necessary, in consultation with the Excise Divisional Officer, if present, the grouping of shops as specified in the Schedule hereto appended, or, if necessary, to reserve shops for which there may be no bids, for disposal hereafter, or to sell the said privilege in any particular case, by means of tenders or by private negotiation. The privilege in any Coffee Estate may be sold to the planter for a fixed amount not less than Rs. 12 per shop per annum. The shops in alienated villages shall be separately sold, and the amounts connected therewith shall be shown in the accounts under a distinct head. The sale in every case shall be subject to the conditions hereinafter set forth, and shall, *unless revised by the Government*, take effect on formal confirmation by the Deputy Commissioner who shall be at liberty to accept or reject any bid at his discretion without assigning reason for the same. Such formal confirmation will be necessary whether the sale be held by the Deputy Commissioner himself or by any other officer appointed by him. Should there be no bid above the upset price, the officer conducting the sale may lower the upset price at his discretion. The officer conducting the sale may, at his discretion and without assigning any reason, refuse to accept the bid of any person on the ground that he has been convicted by a criminal court of such an offence, or has been guilty of such an infringement of the terms of his license or of a contract under the Excise Regulation or Opium Act as to render him undesirable as a holder of a license, or on the ground that he is insolvent, or in order to prevent arrangements to the detriment of Government interests, or for any other valid reason.

2. (*a*) Parties intending to bid must attend either in person or by duly authorized agents; and no person shall be permitted to bid either on his own behalf or on account of any one else until he has made a deposit of Rs. 25 for shops in the Kolar Gold Fields and the Cities of Bangalore and Mysore and Rs. 10 for shops in other places, or such other reasonable amount as may be fixed by the officer conducting the sale. Provided that the Government may at any time dispense with such initial deposit. Such deposit will, if offered, be received within three days previous to the date of sale. Deposits made by unsuccessful bidders, if not forfeited as hereinafter provided, will be returned at the close of the sale.

(*b*) No shops or group of shops shall be knocked down in the name of more than one person or of more than one company or firm duly represented. The selling officer shall refuse to register as a purchaser any one in whose name the bidding has not proceeded.

3. (*a*) The successful bidder shall, on the exclusive privilege being knocked down to him, at once, if so required by the selling officer, or otherwise at the close of the day's sale, further deposit a sum equal to one-twenty-fourth part of his bid for the year, that is to say, one-half of the monthly rent unless the initial deposit equals or exceeds two months' rent. Should he failed to do so, the deposit, if any, made by him under clause 2 (*a*) will be forfeited, and the privilege will be sold again on the

* For Schedule see Supplemental to the *Mysore Gazette*, dated 5th April 1906.

above conditions, or otherwise disposed of at his risk, as the Deputy Commissioner or selling officer may determine.

(*b*) The person to whom a shop or group of shops has been knocked down and who has made deposits as provided above, shall be required to leave his address with the selling officer, in order that the confirmation of the sale may be communicated to that address by a notice, and he shall, within seven days after the service of the said notice by its presentation to himself or to any adult male member of his family at the place of said address or by its being affixed thereto or by its forwardal duly registered by post, pay at the Taluk Treasury concerned, such further sum as, with the former deposits, will make up an aggregate sum equal to two months' rent, and execute at the same time before the Amildar the necessary engagements and take out the necessary licenses, as hereinafter set forth.

4. (*a*) The deposit made under the preceding para shall be either in cash or in Government of India Securities duly endorsed in favor of the Deputy Commissioner. Provided that in cases where the monthly rent exceeds Rs. 10 (in lieu of a deposit of two months' rent as above), the Deputy Commissioner may, in his discretion, allow any purchaser to deposit one month's rent as above, and to furnish approved personal security for an amount equal to four months' rent. In all cases where the monthly rent does not exceed Rs. 10, a cash deposit equal to two months' rent shall invariably be taken, and no personal security shall be accepted. If, on enquiry subsequent to sale, the purchaser shall be found to be a foreigner having no property in the Mysore State, or to be of doubtful solvency he may be required to deposit twice the prescribed sum or to get a surety or sureties, residents of and possessing property in the Mysore State, to execute a security bond for the due payment of *all moneys* that may become due by him under the terms of the contract.

(*b*) Should the initial deposit exceed the sum required to be deposited under clause 3 (*b*) or clause 4 (*a*), the excess will be refunded to the purchaser.

5. The purchaser of the exclusive privilege shall execute an agreement binding himself and, unless exempted by the Deputy Commissioner by an order duly recorded, so much of his movable and immovable property as may be deemed sufficient, to observe the conditions hereinafter set forth, as well as those specified in the license to be issued to him; and his surety, if any has been accepted under the above para, shall also execute a bond in the prescribed form binding himself and so much of his movable and immovable property as may be deemed sufficient by the Deputy Commissioner, for the due fulfilment by the purchaser of the terms of his agreement. The agreement and bond so executed shall be stamped at the expense of the purchaser. They shall also be registered at his expense when the amount secured is Rs. 100 and above.

6. If default is made in making the deposit or deposits or in executing the agreement or the security bond, if any, and in taking out licenses as aforesaid, the exclusive privilege shall be forthwith re-sold or otherwise disposed of by the Deputy Commissioner at the risk of the first purchaser, who shall forfeit to the Government any deposit or deposits already made by him, and shall further be liable to make good any loss caused by such re-sale or other disposal. He shall not be entitled to any gain accruing from the re-sale or other disposal, and he shall be debarred from bidding again for the same or for any other shop or group of shops. In the case of loss the forfeited deposits will be deducted from it and the remainder, if any, shall be recovered as if it were an arrear of land revenue. In the case of the purchaser's death after the confirmation of the sale, it will be binding on his heirs or assigns.

7. As soon as the agreements and bonds have been executed, the Deputy Commissioner will issue a license in the prescribed form, assigning to the purchaser the exclusive privilege referred to therein, subject to the following conditions; but nothing herein contained shall exempt the purchaser of the privilege from liability to the penalties prescribed for breaches of the conditions set forth below, though a formal license may not have been issued to him:—

(1) The exclusive privilege conferred by the license extends to the sale of Date, Palmyra, Cocoanut, Bagani and Dadasal toddy. But in tracts where both Date and Bagani toddy shops exist, the licensee of the Date Toddy shop shall not tap Bagani trees and the licensee of the

Bagani Toddy shop shall not tap Date trees but both licensees can tap any of the other palm trees named above.

(2) The Deputy Commissioner shall be at liberty to issue license for the sale of foreign liquors, for the manufacture and sale of country beer, and for the manufacture and sale of arrack and other country spirits.

(3) The amount of rent shall be payable into the local Government Treasuries on printed chellans furnished for the purpose by Government, in equal monthly instalments commencing from 1st July 1906. No amount shall be paid to or received by the Excise Officers. In the malnad and semi-malnad taluks, the Deputy Commissioner may permit patels of villages who are not themselves licensees to receive payments not exceeding Rs. 50 from any individual at a time. But if the amount of annual rent for any shop does not exceed Rs. 12, the whole of it shall be paid in not more than three quarterly instalments. Each instalment shall be regarded as the rent for the month or quarter in respect of which it is payable. The licensee will make separate payment on account of local cess. Each month's or quarter's rent shall be payable on or before the 20th of the same month or before the end of the quarter. If default is made, the Amildar may, with the sanction of the Deputy Commissioner, by record in writting, suspend or cancel the license, order the forfeiture of all deposits made by the defaulter and proceed to re-sell or otherwise dispose of the shop or group of shops at the defaulter's risk (as soon after the last day of the month or quarter as may be possible), with effect from date of issue of license to the new purchaser, or from the date of other disposal. Provided, however, that instead of re-selling the same as above the Deputy Commissioner may, in his discretion, direct the Amildar to issue licenses to sub-vendors or vendors under the defaulting licensee for rents, the aggregate of which is not less than the rent the defaulting licensee had agreed to pay. The officer who has power to suspend the license may, however, at his discretion, allow sales to continue pending re-sale or other disposal of the privilege.

NOTE.—The licensee of a Jatra shop shall pay the rent thereof in full before the Jatra begins

(4) For the supply of toddy to his shops the licensee shall have the privilege of obtaining, subject to tree-tax rules, toddy-yeilding trees in the groves assigned to his shops or groups of shops, and he shall be at liberty to manufacture toddy from the trees in private lands, under private arrangements between himself and the owners of such lands. He may purchase toddy from any licensed toddy shop-keeper on application to the Inspector, who will grant the required permits on proof of the necessity for the same. No toddy except the produce of trees marked by a proper officer and tapped under a license shall be kept in the shop or offered for sale or sold.

(5) For all toddy-yielding trees, tree-tapping licenses shall be annual. For the convenience of the licensee, the applications for tree-tapping licenses will be received, trees will be marked, and licenses will be issued during the fifteen days and pots may be attached to such marked trees during the eight days immediately preceding the period to which they relate to take effect from the commencement of such period. Provided that no toddy shall be removed from the trees except during the currency of such license.

6) (*a*) Persons applying for the issue of tree-tapping licenses will be responsible to Government for all sums payable as tree-tax on account of the trees licensed therein to be tapped and also for tree-rent in the case of trees on Government unoccupied lands and also for local cess thereon.

(*b*) On receipt of an application, the Inspector will at once take steps for the marking of the tree by an officer superior in rank to a Sub-Inspector, and for the timely issue of the license. Applicants for date trees shall get the requisite spaces on their stems prepared and point

out to the marking officer, when required by the latter to do so, the trees applied for by them. Should they fail to do so, after reasonable notice, the tree-tax and tree-rent paid by them shall be liable to be forfeited at the Deputy Commissioner's discretion.

(7) No tree shall be tapped, nor shall toddy be drawn from any toddy tree, nor shall any pot be attached to any toddy tree until the tree has been marked by the proper officer. But the removal of leaves for the purpose of making incisions and the preparation of the spathes or incisions for the drawing of toddy is permitted as soon as the application in the prescribed form has been delivered to the Treasury concerned.

(8) (1) No tree shall be tapped for toddy without a license therefor to be obtained by payment of tree-tax at the following rates:—

Description of trees.	Rates of tree-tax including local cess per tree per annum.		
	Rs.	a.	p.
Date	1	1	0
Cocoanut	2	2	0
Palmyra	1	9	6
Bagani or sago	1	9	6
Dadasal (Arenga wightii)	0	8	6

NOTE.—The licenses will be free of tax to the Mysore Government in the cases specified in clause 15 (1) (*b*) below.

(2) In addition to the above tax, tree-rent at annas 4 per tree per annum with local cess at 3 pies thereon shall be paid for all Government trees applied for being tapped for the supply of toddy shops whether within or outside the Mysore territories or in the Civil and Military Station of Bangalore.

NOTE.—No trees upon Government occupied land can be tapped without the consent of the owner. The present arrangement as regards trees on alienated land will hold good subject, of course, to the levy by Government of tree-tax.

(9) The tree-tax shall be payable in the following instalments, unless the Excise Commissioner shall otherwise direct:—

Period within which license is applied for	Proportion of tree-tax to be paid at the time of application for license	Proportion of tree-tax to be paid on the first of the 3rd month
Between 1st July 1906 and 30th April 1907 ..	One-third ..	The remaining two-thirds.
Between 1st May 1907 and 30th June 1907 ...	The whole ...	.....

(10) (*a*) The tree-rent together with the local cess on tree-rent and also the local cess on the tree-tax for trees applied for shall be payable in full at the time of application for tapping license.

(*b*) If any instalments are not paid within the time, the license shall be liable to be cancelled or suspended under Section 26 of the Excise Regulation.

(*c*) When the licensee makes default and his shop is re-sold, his rights to and claim on Government trees cease and determine.

(*d*) In case of default, the Amildar with the Deputy Commissioner's permission will order the suspension of the tapping license till the arrears are paid up and if, after receiving notice of such suspension, the defaulter continue to tap the trees, he will be prosecuted for illicit tapping.

(11) The deposit made by the licensee will be taken as security for the due performance of the conditions of the license and if not forfeited or credited or otherwise disposed of shall be taken in payment of the instalment due in the last months or month of the period of the license.

All arrears and deficits payable by the licensee shall, with interest at 6 per cent per annum, be recoverable from him or his surety under the rules in force for the recovery of land revenue. Interest shall be calculated on all arrears from the date of default and on deficits from the date of re-sale or disposal otherwise. No remission or abatement of the rent or compensation shall, on any account whatever, be claimable by the licensee, nor will he be entitled to any compensation for any trees withdrawn or taken for the public purpose.

(12) If the Deputy Commissioner does not confirm the re-sale, he may make such other arrangements as may appear advisable for the remainder of the period of the lease, in which case he shall serve a notice on the defaulting licensee informing him of the nature of the arrangements made.

(13) If the licensee of a group of shops wishes to establish a depot for depositing toddy required for distribution to his shops, he shall obtain a license for it in the prescribed form. The passes issued with the toddy transported, shall be subject to examination and check by the officers authorized in this behalf.

(14) The tree-tax on toddy produced by trees in the Madras Presidency but consumed in the Mysore State, will be credited to the Mysore Government. The rate of tree-tax to be paid in such cases will invariably be the highest in force on either side of the frontier. Tree-tax on trees in the Madras Presidency for which tapping licenses are about to be taken out by Mysore shop-keepers, must be paid in one instalment to the Amildar of the Taluk concerned in the Mysore State, who will grant a receipt in the prescribed chellan form and certify at the foot that the applicant is a person entitled to take out tree-tapping licenses. The applicant will then make his application to British authorities in accordance with the Madras Government Tree-tapping Rules, and will obtain a transport permit from the Inspector concerned in the Mysore State for the transport of the toddy drawn from the frontier to the shop or depot for which it is intended, after having complied with all requirements of the Madras Government Rules.

(15) (1) Tree-tapping licenses in the prescribed form shall be issued on the application—

(*a*) of licensed toddy shop-keepers or of their duly authorized agents,

(*b*) of tree-owners in coffee estates, hittals and kans in the malnad free of the prescribed tree-tax for drawing toddy for *bonâ fide* domestic purposes as per Government Order No. 11897-906—Excise 485, dated 20th June 1898, for such number of trees as may be found necessary by the Excise Commissioner.

(2) The licenses may be issued in the name of the applicant himself or of his nominees.

(16) Applications for the grant of tree-tapping licenses must be made in the prescribed form to the Excise Inspector of the Range concerned through the local Treasury. Forms may be obtained from him or the Assistant Inspectors under him.

(17) Applications for tree-tapping licenses, for trees in occupied or alienated lands should be countersigned by the owner of the trees intended to be marked, in token of his consent. Applications for tree-tapping licenses for trees in State Forests and plantations should be countersigned by the Forest Range Officer in token of his consent.

(18) Deputy Commissioners may, subject to the orders of the Excise Commissioner from time to time, prescribe the minimum number of trees for which license will be granted, and the minimum number to be entered in a single application. They may also direct that the trees situated in one village only shall be included in an application.

(19) Every person to whom a tapping license is granted for the manufacture of toddy shall observe the following rules in tapping date trees:—

(a) Date trees shall be tapped only by professional men.

(b) Trees tapped one year shall not ordinarily be tapped the next year.

(c) Trees shall not be over-tapped or over-worked.

(d) In no date trees shall the initial incision be made at any point less than 3 feet from the ground except in places where permission is specially given by the Excise Commissioner.

(e) The depth and width of the incision shall not exceed one-third of the diameter of the tree, and the length of it shall not exceed eight inches.

(f) Every fresh incision shall not be less than one foot above the last incision except in localities where permission is specially given.

(g) The central spike-like clusters shall not be touched. Of the lateral leaves not less than two layers of leaves shall be left, reckoning from the layers immediately next to the central clusters down to the top line of the incision; or in other words, above the top line of the incision not less than eight leaves shall be left excluding the central spike-like clusters, on that face of the tree on which the incision is made.

(h) The licensee shall not cut or injure or permit to be cut or injured the trees licensed to him or any other trees.

(i) The licensee or his employer will be liable to pay a fine of one rupee for each tree in excess of three per cent of the number of trees marked for him which may die from over-tapping or careless tapping either during the lease or within six months after its expiration.

(20) The licensee shall not interfere with the persons holding license for cutting date leaves for mat-making, rope-making, basket-making, or for agricultural or other purposes, when they make use of the trees assigned for such purposes, and not received for tapping.

(21) The licensee of the depot or shop or group of shops will be required to keep true account of the receipts and issues of toddy from day to day in ink in the prescribed form. The accounts and permits shall be in printed books which may be obtained from the local Excise Officer on payment of cost price. Permits for toddy received and the counterfoils of permits issued must be carefully filed. The signing of blank permits for subsequent issue is prohibited. The accounts and counterfoils of permits shall be preserved and delivered to the local Excise Officer immediately after the close of the lease. They shall be produced when asked for by the Deputy Commissioner or any officer appointed by him or by an Excise Officer not below the rank of an Excise Assistant Inspector. Such returns and information as may be required by the Deputy Commissioner or Excise Officer not below the rank of an Excise Assistant Inspector shall be furnished by holders of licenses without delay.

(22) The sales must be conducted in a suitable building which shall have only one door, and no windows or other opening shall be allowed to the rear or at the ends of the building. The bar at which toddy is sold shall be opposite the entrance door and so situated that all persons inside can be seen by any one passing to and fro in the street, and no second room shall be used for the sale of toddy, or be kept open for customers.

(23) Toddy shall not be sold except in shops duly licensed by the Deputy Commissioner, in the prescribed form and no new shops shall be opened without the previous sanction of the Excise Commissioner. Tree-foot sales or sales in the open, or the disposal of toddy in any other manner unauthorized by the rules, are strictly prohibited. Provided, however

that in Bagani tracts, the licensee who has purchased the right of vend of Bagani toddy, may permit the tapping of Bagani trees for domestic consumption as well as for sale, within the limits of the village purchased by him.

(24) The Deputy Commissioner may, whenever he thinks fit, direct shops to be closed or permit transfers of shops from one place to another within two hundred yards of the sanctioned site. A sufficient supply of toddy shall be maintained in all sanctioned shops, the quantity being such as may be fixed by the Excise Divisional Officer.

(25) The licensee shall place the license granted to him in a conspicuous place in the shops.

(26) The right is reserved to the Deputy Commissioner to grant occasional licenses for the sale of toddy on the occurrence of fairs, festivals, etc., in places in the vicinity of which there are no regularly licensed shops. Such licenses shall ordinarily be granted to shop-keepers, who usually supply the locality. Their period shall not exceed fifteen days and the fee to be paid therefor shall be fixed at the Deputy Commissioner's discretion unless he decides to sell the same by public auction.

(27) A sign-board shall be affixed in a conspicuous part of the front of each shop containing, in the local vernacular, the name of the shop-keeper, number of his license and the rate at which toddy is sold by him. The sale or transport of toddy by persons suffering from leprosy or any contagious disease and the employment of such persons in the shop, are prohibited.

(28) The licensee shall prevent all drunkenness or disorder or gaming within his shops.

(29) No shop shall be opened before sunrise or kept open after 9-30 P. M. in the City of Bangalore except under special authority. The shops shall be kept open during the authorized hours, unless its temporary or permanent closure is authorized by the Deputy Commissioner.

(30) The licensee shall not harbour robbers or thieves or disorderly or riotous persons or prostitutes or soldiers or others known or believed to be deserters. No persons shall be harboured in any shop during the night, but, on the contrary, the licensee shall give intimation to the nearest Magistrate or Police Officer as to any such persons who may resort to his shops.

(31) The licensee shall not receive any grain, jewels, goods, wearing apparel, or other article in barter or in pawn for toddy, but on the offer of any such, shall give information to the nearest Magistrate or Police Officer.

(32) The licensee, vendor, or vendors shall not sell to any person more than three measuring seers of toddy to be consumed by the person at one time in the shop. He shall not allow any one to take out of his shop without a pass more than two seers or imperial quarts with the exception of bakers who are permitted to purchase and remove the quantity of toddy specified in the pass held by them. Toddy can be removed upon passes for consumption up to the limit of one imperial gallon or four seers.

(33) The distillation of spirit from toddy is absolutely prohibited.

(34) Toddy shall be sold pure as drawn from trees, and shall not be adulterated or diluted in any manner in the shops, or depots if any. No ingredient noxious to health shall be put into the toddy either to increase its intoxicating power or for any other purpose. All officers authorized to inspect shops and depots are authorized to detain any liquor found unfit for consumption or use and Excise Commissioner, all Deputy Commissioners and Deputy Excise Commissioner and Excise Assistant Commissioners are empowered to destroy such liquor.

(35) Toddy shall not be sold to the public at less than the retail rates fixed by Government as per schedule attached.

(36) The licensee shall possess or use on any licensed premises only such standard measures of capacity as may, from time to time, be prescribed by the Excise Commissioner. The officers authorized to inspect licensed

shops, are empowered to enter and examine the premises to test measures in use and the toddy under sale and to call for and check accounts in the shop.

(37) The licensee shall have such measures tested and stamped to his own expense.

(38) No toddy shall be sold or given to any European non-commissioned officer, private or solder, or to any European or Eurasian camp follower, or to any member of the families of any of the aforesaid persons, without the permission, in writing, of the Commanding Officer, or of some person duly authorized by him in this behalf; nor to any European or Eurasian sailor, nor to any sepoy, member of the Police force, Excise officer, or a servant of a Railway Company whilst on duty; nor to any European vagrant under escort of the Police; nor to any child under fourteen years of age, nor to any insane person for consumption on the premises; nor shall any toddy be sold *on credit.*

(39) The Deputy Commissioner or Assistant Commissioner in charge of the Taluk may direct that all shops for the sale of toddy on, or adjacent to, the line of march shall be closed whilst a regiment or detachment of European or Native soldiers is passing or encamped in the vicinity. Such soldiers may be supplied with toddy by such persons as the Government may select for the purpose, notwithstanding the licensee's exclusive privilege.

(40) The Government reserves the power to terminate the lease on public grounds, on giving the licensee fifteen days' notice and awarding a reasonable compensation to the licensee. The licensee will have no claim to compensation or remission on account of any arrangements which may be made by Government in regard to country beer or other description of liquor than toddy.

(41) The license shall not be transferable by sale, gift or otherwise or be sub-rented except with the permission of the Excise Commissioner. Applications for the resignation of shops in whole or in part will be summarily rejected by the Deputy Commissioner.

(42) No person shall be appointed by the licensee for the management of any such privilege without the Deputy Commissioner's previous approval.

(43) All engagements entered into by agent, shall be deposited with the Deputy Commissioner within one month from the date of execution.

(44) If it comes to the licensee's knowledge that any person employed by him in the manufacture, carriage or sale of toddy commits any breach of the Excise Law or of the engagements entered into by him, it shall be the licensee's duty to report the matter to the Deputy Commissioner, and to comply with the directions of the Deputy Commissioner respecting the further employment of such person.

(45) The licensee of shop or group of shops shall not, during the term of the license, have any interest in the exclusive privilege of vending arrack within five miles from it nor permit any person having interest in the exclusive privilege of vending arrack within the said area of five miles to hold any share or interest in his exclusive privilege of selling toddy; nor shall he, during the term of his license, without the written permission of the Excise Commissioner, have any interest, direct or indirect, in any toddy shop or farm outside the territories of Mysore, or in the Civil and Military Station of Bangalore.

(46) The licensee shall provide himself with printed forms of permits for transport and possession of toddy. Such permits shall be in the form prescribed by the Excise Commissioner, and shall be purchased from local Excise officers. He shall have no other pecuniary dealings with any Excise officer.

(47) The licensee shall pay the usual mohatarfa tax on carts used for conveying toddy but such carts shall not be impressed for Government work

(48) In case of any breach of the aforesaid Rules or of the conditions of the license either by the licensee or with his connivance or privity by any person in his employment, or in case of the licensee neglecting to open his shops on 1st July 1906, or to carry on his business with due care and attention, it shall be competent to the Deputy Commissioner to impose upon the licensee a fine not exceeding the sum of Rs. 50 for every such breach or neglect, or at the option of the Deputy Commissioner to declare the money deposited with him forfeited, and to cancel the license, and to re-sell the exclusive privilege or otherwise dispose of it at the risk of the licensee, or to place it under the management of Government. When a license is cancelled, the rent for the whole period of the license shall become due at once; and all loss caused to Government by the cancelment of the license or by the re-sale or other disposal of the privilege shall be made good by the licensee, or his surety in the manner specified in condition 53. All sums due shall be recovered in the same manner as if they were arrears of land revenue.

(49) An Inspection note-book with the pages numbered consecutively for inspecting officers to enter their remarks, shall be maintained and be handed over to the Excise Inspector in charge of the Range or any officer authorized by him to receive it on a receipt being given therefor.

(50) The imposition of a fine, or the forfeiture of a deposit, or the cancellation of the license under the last preceding condition, shall not be held to prevent the prosecution of the licensee or his agents or employees for any offence punishable under the law for the time being in force.

NOTE.—For continuing breaches of a license, continuing fines may be imposed.

(51) No person who has been convicted of any heinous offence under the Indian Penal Code shall be employed in the carriage or sale of liquor without the Deputy Commissioner's previous permission.

(52) If the licensee shall be convicted on prosecution before a Magistrate of any offence against the Excise Regulation or Opium Act or other law for the time being in force, which, in the Deputy Commissioner's opinion, renders him unfit to hold the license, it shall be lawful for the Deputy Commissioner to declare his license forfeited or sell or otherwise dispose of the privilege at the risk of the licensee.

(53) All sums payable by the licensee may be deducted from the amount of his deposit, or recovered by attachment and sale of the property of the licensee or his surety, under any law for the time being in force for the recovery of arrears of land revenue.

(54) The licensee shall be bound by the provisions of the Excise Laws and Rules thereunder for the time being in force and by the terms and conditions of the license. The licensee shall, on requisition by the Deputy Commissioner or other officer duly authorized by him, deliver up his license for amendment or for the issue of a fresh license accordingly.

(55) In every grove where toddy-yielding trees are tapped, a ladder shall always be kept by the tap-men to enable Excise officers to examine incisions or spathes, as the case may be, or to measure the incisions.

DATES OF SALE.

District	Taluk	Date
		May 1906
Bangalore	Bangalore City	1
	Bangalore Taluk	2
	Anekal	4
	Hoskote	8
	Devanhalli	10
	Podballapur	12
	Nelamangala	14
	Magadi	16
	Channapatna	19
	Kankanhalli	21
		May 1906
Kolar	Goribidnur	3
	Bagepalli	7
	Chikballapur	9
	Sidlaghatta	11
	Chintamani	15
	Srinivaspur	17
	Mulbagal	19
	Kolar	21
	Malur	23
	* Kolar Gold Fields	25
	Bowringpet	26
		May 1906
Hassan	Belur	1
	Manjarabad	3
	Arkalgud	7
	Hole-Narsipur	9
	Hassan	11
	Channarayapatna	14
	Arsikere	17
		May 1906
Kadur	Kadur	19
	Tarikere	21
	† Yedahalli	23
	Koppa	25
	Mudgere	28
	Chikmagalur	31

District	Taluk	Date
		May 1906
Tumkur	Kunigal	8
	Tumkur	10
	Gubbi	12
	Tiptur	16
	Chiknayakanhalli	19
	Sira	23
	Maddagiri	25
	Pavagada	28
		Apl. 1906
Mysore	Yedatore	24
	Hunsur	26
	Heggaddevankote	28
	Nanjangud	30
		May
	Gundlupet	2
	Chamrajnagar	4
	Yelandur	7
	T.-Narsipur	9
	Malvalli	11
	Mandya	14
	Seringapatam	16
	Krishnarajpete	18
	Nagamangala	21
	Mysore City and Taluk	23
		May 1906
Shimoga	Shimoga	4
	Tirthahalli	8
	Nagar	10
	Sagar	12
	Sorab	14
	Shikarpur	16
	Honnali	18
	Channagiri	21
		May 1906
Chitaldrug	Hosdurga	8
	Holalkere	10
	Davangere	
	Jagalur	15
	Molakalmuru	17
	Challakere	19
	Hiriyur	22
	Chitaldrug	25

* Gold Fields Magistrate's Court. † Deputy Amildar's Office.

P. N. PURNAIYA,
Excise Commissioner in Mysore.

Notice, dated 17th April 1906.

It is hereby notified for the information of the public that Red Paint will be used in marking all toddy-producing trees in the Mysore State during the official year 1906-07.

N. GOPALIENGAR,
for *Excise Comr. in Mysore.*

FOREST DEPARTMENT.

Dated 2nd April 1906.

Under the authority of Government Proceedings No. R. 7581-90—Ft. 15-02-13, dated Bangalore, 20th December 1905, the following statement showing the ways allowed to the public and particulars of water supplies, etc., available in the undermentioned State Forests of the Tumkur District, is published for the information of the public :—

HULIYURDURGA FOREST.

KUNIGAL TALUK.

Huliyurdurga Block.

1. Cart-track from Huliyurdurga to Kalammanagudi, twenty yards wide and one mile and five furlongs long, open to all traffic. It enters the Huliyurdurga Forest Block at cairn No. 33 and passes through the forest for a distance of one mile and three furlongs and leaves the forest between cairns Nos. 71 and 72 near the Devambudi tank.

2. Foot-path from Huliyurdurga to Jodi Vaddarpalli, four feet wide and five furlongs and 130 yards long, open to men and cattle. It enters the reserve between cairns Nos. 17 and 18 and leaves it near cairn No. 88, passing through the forest in an easterly direction.

3. Foot-path from Huliyurdurga to Hittalpura, four feet wide and ten furlongs long, open to men and cattle. It enters the Huliyurdurga reserve between cairns Nos. 13 and 14 and meets Ujjani Block line at cairn No. 96, finally leaving the Ujjani Block between Nos. 130 and 131 passing through the forest in a south-easterly direction.

Ujjani Block.

1. Foot-path from Jodi Vaddarpalli to Hittalpura, four feet wide and five furlongs and 150 yards long, open to men and cattle. It enters the forest near cairn No. 7 and leaves between cairns Nos. 122 and 123, passing through the forest in a southerly direction.

2. Foot-path from Benachikal to Ujjani village, four feet wide and eight furlongs long, open to men and cattle. It enters the forest at cairn No. 14 and leaves the same between cairns Nos. 115 and 116, passing through the forest in a southerly direction.

3. Foot-path from Benachikal to Kenchanahalli, four feet wide and six furlongs long, open to men and cattle. It enters the forest between cairns Nos. 23 and 24 and then finally leaves the same between cairns Nos. 45 and 46, passing through the forest in an easterly direction.

4. Foot-path from Kenchanahalli to Kadeboranahalli, four feet wide and four furlongs long, open to men and cattle. It enters the reserve between cairns Nos. 49 and 50 and then passes to Survey No. 64 of Kadeboranahalli, passing through the forest in a south-westerly direction.

5 Foot-path from Handalkere to Ujjani *via* Kadeboranahalli, six feet wide and two miles and five furlongs long, open to men and cattle. It enters the forest between cairns Nos. 55 and 56, and quits it between cairns Nos. 111 and 112 crossing Kadeboranahalli situated within the reserve, passing through the forest in a south-westerly direction.

6. Foot-path from Tavarekere to Kachihalli, four feet wide and one mile long, open to men and cattle. It enters at cairn No. 64 and leaves the reserve between cairns Nos. 81 and 82, passing through the forest in a southerly direction.

7. Foot-path from Kadeboranahalli to Benachikal, about six furlongs long and four feet wide. It enters the forest between cairns Nos. 5 and 6, passes through the forest in a north-westerly direction and quits it between cairns Nos. 19 and 20.

Ippadi Block.

1. Cart-track from Ippadi to Harohalli, six feet wide and four furlongs long, open to all traffic. It enters the forest at cairn No. 2 and leaves the same between cairns Nos. 78 and 79, passing through the forest in a south-easterly direction.

2. Foot-path from Hutridurga to Harohalli, four feet wide and three furlongs and 105 yards long, open to men and cattle. It enters the reserve between cairns Nos. 22 and 23 and leaves the same between cairns Nos. 72 and 73, passing through the forest in a southerly direction.

3. Cart-track from Hulikatte to Neelasandra, eighteen feet wide and one mile and 100 yards long open to all traffic. It enters the block at cairn No. 42 and leaves between cairns Nos. 68 and 69, passing through the forest in a westerly and south-westerly direction.

4. Cart-track from Bayadarahalli to Magadi high road, sixteen feet wide and four furlongs long open to all traffic. It enters the block between cairns Nos. 53 and 54 and then finally leaves the reserve at 7—39th mile stone; passing through the forest in a northerly and easterly direction.

5. Cart-track from Gadde Tippasandra to Ippadi, four furlongs long, enters the forest near cairns Nos. 119 and 120 and leaves the forest near cairn No. 122, passing through the forest in a northern direction.

Under the authority of Government Proceedings No. R. 7581-90—Ft. 15-02-13, dated Bangalore, 20th December 1905, the following statement showing the ways allowed to the public and particulars of water supplies, etc., available in the undermentioned State Forests of the Tumkur District, is published for the information of the public :—

TIRTHARAMPURA FOREST.

CHIKNAYAKANHALLI TALUK.

1. Foot-path leading from Godekere to Tirthapura, called Aravattige Alladamaradadari, about two yards wide and two miles long. It enters the State Forest at 3rd mile, 7th furlong of the demarcation line and at south-east corner of Survey No. 12 of Manchikatte, runs north-east through Survey Nos. 41 and 42 of Sandenahalli and 34 of Yerrekatte villages, and leaves the demarcation line at fifteenth mile and fourth furlong at the south-west corner of Survey No. 35 of Yerrekatte. It is open to both people and cattle.

2. Foot-path leading from Bullanahalli to Dodrampura and Tirthapura, about two yards wide and half a mile long. It enters the State Forest at the fourth mile about 100 yards south-west of north-east corner of Survey No. 7 of Bullanahalli and proceeds in the north-eastern direction through Survey Nos. 42 of Sandenahalli and 34 of Yerrekatte villages, and joins the Godekere-Tirthapura path after passing in the last named survey number about 100 yards. It is open to both people and cattle.

3. Cart-track leading from the 65th mile stone on Bangalore-Shimoga road to Tirthapura about five yards wide and three miles long. It enters the State Forest at the twenty-fourth mile and sixth furlong at the point where Survey Nos. 20 and 21 of Bommarasanahalli meet, passing through the Survey No. 25 of Bhogasandra and also through Survey Nos. 14, 16 and 7 of Karadikallu villages in a north-western direction and 136 of Kondli, in which it changes its direction to the north after passing about 150 yards, and leaves the demarcation line at the nineteenth mile, third furlong, about two furlongs from the south-east corner of Survey No. 136 of Kondli to the north-west of it or about two furlongs from south-west corner of survey number 1 of Oblapura.

4. Cart-track leading from Kondli and Mavinhalli to Dodrampura, about five yards wide and one and a quarter miles long. It enters the State Forest about twenty-five yards from the south-east corner of Survey No. 22 of Mavinahalli, and passing through the same survey number in a northern direction, leaves the demarcation line at sixteenth mile, 7th furlong, about 100 yards from the north-east corner of the abovementioned survey number to the west of it.

5. Foot-path leading from Kondli to Maganayakanakote called Sulekalve foot-path, about two yards wide and two miles long. It enters the State Forest at thirtieth mile, sixth furlong, at a point about three furlongs from the south-east corner of Survey No. 8 of Mudlupalya to the north of it, passing through Survey Nos. 15 and 16 of Karadikallu, going exactly to the east and then to the north-east, and crosses cart-track No. 3, whence it changes its direction to the east, passing through Survey Nos. 14 of Karadikallu and 25 of Bhogasanda, leaves the demarcation line at twenty-third mile, fourth furlong, near the north-west corner of Survey No. 18 of Bhogasandra. It is open to both people and cattle.

6. Foot-path leading from Kondli to Oblapura, about two yards wide, one mile long. It enters the State Forest at thirty second mile, fifth furlong, about fifteen yards from the south-east corner of Survey No. 61 of Kondli to the west of it, passing through Survey No. 136 of Kondli in a northern direction, and leaves the demarcation line at eighteenth mile, fourth furlong, about two furlongs from the south-east corner of Survey No. 41 of Chikrampura to the south-east of it.

7. Foot-path leading from Chiknayakanhalli to Madanmadu called Thikanakanavedari, about two yards wide and one and a quarter miles long. It enters the State Forest at seventh mile, third furlong, about fifteen yards from the north-east corner of Survey No. 11 of Gollanahalli, proceeds in the eastern direction for about three-fourths of a mile along Survey No. 9 of Homblikatte, and then it changes its direction to the north-east and leaves the demarcation line at twelfth mile, fourth-furlong, at about eighty yards from the north-east corner of Survey No. 9 of Homblikatte to the south of it. It is open to both people and cattle.

8. Foot-path leading from Kondli to Adalgere about two yards wide and half a mile long. It enters the State Forest at twenty-seventh mile, sixth furlong, about half a mile

from the north-east corner of Survey No. 37 of Sivasandra to the south of it, passing directly to the east in Survey No. 42 of Virupakshipura, and leaves the line at the twenty-sixth mile, fourth furlong, about three furlongs from the north-east corner of the above said survey number to the south of it. It is open to both people and cattle.

9. Waterway to Kemparayanavajra situated in Survey No. 36 of Ganehal village, about two furlongs in length, is allowed for the use of the people and the cattle of Ganehal village.

10. A way twelve yards wide hedged on either side from a bandh twenty yards from the fourth furlong stone of the eighteenth mile of the demarcation line on the boundary of Survey No. 35 of Gudda-Oblapura for a distance of 1,120 yards to Pikkalhalla, for water for the use of the cattle belonging to the Gudda-Oblapura and Gollarhatti of Hagalvadi Hobli, Gubbi Taluk. This concession is allowed subject to be withdrawn if any of the terms laid down in a mutchalika dated 5th February 1899, executed on a stamped paper by the villagers, are violated.

MANCHALDORE FOREST.

GUBBI TALUK.

1. Foot-path leading from Manchaldore to Hagalvadi and other places, about two yards wide and two and a half miles long. It enters the State Forest at twenty-second mile, fifth furlong, passing directly to the west through Survey Nos. 79, 80 and 81 of Manchaldore and 36 of Karihalli, leaves the demarcation line near the nineth mile. It is open to both people and cattle.

2. Foot-path leading from Guddenhalli to Machanahalli, two yards wide and one and three-fourth miles long. It enters the State Forest at tenth mile, seventh furlong, passing through Survey Nos. 38, 20 and 21 of Karihalli and 24 of Machanahalli, towards the east, leaves the demarcation line at twentieth mile, third furlong, at the north-east corner of Survey No. 20 of Machanahalli. It is open to people and cattle.

3. Foot-path leading from Hagalvadi to Huvvinkatte, two yards wide and one and one-fourth miles long. It enters the State Forest at nineth mile, fourth furlong, about two furlongs south of the north-west corner of Survey No. 105 of Huvvinkatte, passing east through Survey Nos. 105 and 106 of Huvvinkatte leaves the demarcation line at second mile, second furlong, about two furlongs south of the north-east corner of Survey No. 106 of Huvvinkatte. It is open to both people and cattle.

4. Cart-track leading from Karimadenahalli to Kuntaramanahalli, five yards wide, two and a half miles long. It enters the State Forest at the sixteenth mile, passing directly towards south through Survey Nos. 68 of Haralukatte and 45 and 44 of Kalinganahalli, leaves the demarcation line at eighteenth mile, third furlong. It is open to carts, people and cattle.

5. Cart-track leading from Shivarampur to Kuntaramanahalli, five yards wide, two and a half miles long. It enters the State Forest at the fourteenth mile, third furlong, about one furlong south-west of the north-west corner of Survey No. 68 of Haralukatte, passing through the same survey number for nearly half a mile, and then it leaves the demarcation line at fourteenth mile, second furlong, about two furlongs south of the north-east corner of the above named survey number, and again enters the State Forest at fifteenth mile, seventh furlong, passes through Survey Nos. 68 and 81 of Haralukatte and Survey Nos. 45 and 44 of Kalinganahalli and Survey No. 24 of Muchalanahalli all along in a south-easterly direction, and leaves the forest at the twentieth mile, fourth furlong. It is open to carts, people and cattle.

6. Foot-path from Shivarampura for the use of both people and cattle is allowed to the raiyats of Gundlukunte land, which is about two yards wide and three-fourth mile long from fourteenth mile, first furlong, to Gudlukunte through Survey No. 68 of Haralkatte.

Under the authority of Government Proceedings No. R. 7581-90—Ft. 15-02-13, dated Bangalore, 20th December 1905, the following statement showing the ways allowed to the public and particulars of water-supplies, etc., available in the undermentioned State Forest of the Tumkur District, is published for the information of the public :—

BUKKAPATNA FOREST.

1. Huliyar-Bukkapatna high road, six yards wide and three and one-fourth miles long, open for carts, people and cattle. It enters the State Forest at forty-third mile, second furlong, and leaves the forest at forty-sixth mile, fourth furlong.

2. Hagalvadi-Ramanahalli foot-path, six feet wide and three miles long, open for people, pack animals and cattle. It enters the State Forest near the north-east corner of Survey No. 4

of Siddapur, and passing through Survey Nos. 3, 1, 54, 55, 51, 57, 60 and 61 of Siddapur Balekonu and Survey No. 40 of Ramanahalli, leaves the State Forest in Survey No. 40 of the last named village at a point about three furlongs north from the middle bandhs of the southern boundary of the same survery number.

3. Hagalvadi-Timmanahalu foot-path, four feet wide and about four miles long, open for people and cattle. It enters the State Forest in Survey No. 17 of Siddapur at a place about hundred yards from the north-east corner, and runs in a westerly direction through Survey Nos. 3, 2, 1, 54, 53, 45 and 27 of the last named village and Survey No. 19 of Ghantenahalli, and leave the State Forest at the south-east corner of Survey No. 88 of Timmanahalli.

4. Jankal-Badape Gudlu foot-path, four feet wide and about two and a half miles long, open for people and cattle. It enters the State Forest in Survey No. 14 of Basavanahalli about hundred yards from the south-west corner of the same survey number, and runs in a westerly direction through Survey Nos. 17 of Basavanhalli and 24 of Mailkebbe, and leaves the State Forest about seventy-five yards south of the boundary bandhs of Survey Nos. 14 and 15 of Hullenahalli and Survey Nos. 24 and 12 of Mailkebbe.

5. Jankal-Timmanahalli foot-path, four feet wide and about six miles long, open for people and cattle. It enters the State Forest in Survey No. 16 of Basavanahalli, runs in a south-westerly direction, passing through Survey Nos. 16 of Basavanahalli, 51, 50, and 48 of Siddapur, 27, 26, 25, 24, and 19 of Ghantenahalli, and leaves the State Forest in Survey No. 88 of Timmanahalli.

6. Cart-track from Jankal to Huliyar-Bukkapatna road, six yards wide and about three miles long, open for carts and people. It enters the State Forest in Survey No. 32 of Jankal about a furlong south from the boundary bandhs of Jankal and Budigudda kaval and runs in a north-westerly direction through Survey Nos. 18, 20 and 21 of Budigudda until it meets No. 1 high road.

7. Pura-Dabgunte cart-track, six yards wide and about four miles long, open for carts and people. It enters the State Forest in Survey No. 62 of Pura at the boundary bandhs of Survey No. 62 of Tippanahalli and runs in a westerly direction through Tippanahalli and Survey Nos. 4, 3, 2, 1 of Maridasanahalli and 40 of Marenadu, and leaves the State Forest in Survey No. 40 of Marenadu at a place about two furlongs from the south-west corner of the same survey number.

8. Hunsekatte-Marenadu foot-path, four feet wide and four miles long, open for cattle and people. It enters the State Forest near Venkatapur in Survey No. 133 of Yerradakatte, and runs in a westerly direction through Survey Nos. 1 and 2 of Venkatapura and Survey No. 2 of Kambada and Survey Nos. 1 of Suladahal and 1 of Maridasanahalli and 40 of Marenadu, and leaves it in Survey No. 40 of Marenadu.

9. Yerradakatte-Marenadu foot-path, four feet wide and about three miles long, open for people only. It enters the State Forest in Survey No. 143 of Yerradakatte, and runs in a westerly direction through Survey Nos. 140 and 19 of Yerradakatte and Survey Nos. 2 and 1 of Boranhal until it meets foot-path No. 10.

10. Ajjanahalli-Marenadu foot-path, four feet wide and about seven miles long, open for people and cattle. It enters the State Forest in Survey No. 55 of Ajjenahalli, and runs in a south-westerly direction, passing through Survey No. 9 of last-named village and Survey Nos. 12, 13, 14 and 19 of Gargarpente and Survey No. 1 of Boranahal, No. 2 of Suladahal, joins foot-path No. 8 at the boundary bandhs of Suladahal, Maridasanahalli and Marenadu.

The following privileges were recognized at settlement subject to regulation and restriction by the Deputy Commissioner of the District and withdrawal in case of abuse :—

1. A way twelve yards wide for cattle only from Nerlagudda to the stream of Bellarahalla *via* Bornahal for a distance of two miles, two furlongs and eighty yards.

2. A way twelve yards wide for cattle only from Yerradakatte to the stream of Bellarahalla for a distance of about one mile, one furlong and 160 yards.

3. A way twelve yards in width for cattle only from Ajjenahalli to the stream of Bellarahalla for a distance of one mile and forty yards.

4. The raiyats of Kumbarahalli, Hunusekatte and Pura villages are allowed to take their cattle for water by the demarcation line to Chikkathore.

5. A way to the undermentioned shrines will be admitted as follows for the use of worshippers and others :—

Name of shrine	Situation	Access to the shrine
Timmappanagudi	Situated on the top of Timmappanagudda.	By a foot-path branching from path No. 5 near the boundaries of Basavanahalli and Mailkebbe and runs for about two furlongs up to the shrine.
Suladahalli Ramappanagudi.	Situated in the deserted village of Suladahal in the midst of the forest.	By a foot-path branching from path No. 9 near Boranhal running for about two furlongs up to the shrine.

H. RAMIAH,
Dist. Forest Officer, Tumkur Dt.

Notification dated 20th April 1906.

It is hereby notified for general information that the following quantities of timber will be sold by public auction in the Depots of the Kadur District on the dates specified against each Depot, by the District Forest Officer of the Kadur District :—

No.	Name of Depot	Date of sale	Description	Cubical contents		Remarks
				No.	Cubic feet	
1	Kadur ...	23rd May 1906 ...	Matti logs	15	300	
			Teak poles	500	1,500	
			Honne rafters	600	1,500	
2	Tarikere ...	25th May 1906 ...	Teak logs	250	5,000	
			Teak poles	200	500	
			Matti logs	10	200	
			Nandi logs	72	1,900	
			Yettega logs	72	1,300	
			Teak sawn rafters and planks	4,000	4,200	
			Bite logs	58	1,230	
			Teak reepers	1,065	8,480 Rft.	More or less.
			Neralu	10	225	
			Matti rafters big and small	300	450	
3	Benkipur ...	28th May 1906 ...	Teak logs	200	4,000	
			Matti logs	100	200	
			Nandi logs	10	200	
			Yettega logs	26	1,026	
			Hunnal logs	29	780	
4	Shimoga ...	30th May 1906 ...	Nandi logs	10	200	
			Bite logs	8	220	
			Yettega logs	20	619	
			Hunnal logs	67	1,800	

N. B.—Terms of Sale.—Notification No. R. 15229—R. F. 155-92, dated the 15th March 1895, published in the *Mysore Gazette* No. 15, dated the 25th April 1895.

B. HEERASINGH,
Dt. Forest Officer, Kadur Dt.

POLICE DEPARTMENT.

List of property seized by the Police on 1st March 1906 during a search instituted on suspicion in the house of Sivachar Nanjiah, a resident of Dugahalli village of Yelandur Taluk.

		Rs.	a.	p.
1.	Eight good pearls which had been sold to one patel Putta Basavappa for Rs. 7	15	0	0
2.	One big copper vessel (ಹಂಡೆ) weighing about a maund	15	0	0
3.	One copper vessel (ಹಂಡೆ) somewhat new, weighing 35 seers	12	0	0
4.	One brass kolaga thapali with brass rings, weighing 30 seers	12	0	0
5.	Two small brass kolaga thapales tinkered inside and weighing 25 seers ..	8	0	0
6.	One small coppy vessel (ಹಂಡೆ) weighing about 15 seers ...	6	0	0
	Property found on opening a big box which was locked and kept in a room. (*In cases.*)			
7.	One pair of chendramuru (ಚಂದ್ರಮುರ) studded with red and white stones and stringled with ordinary pearls	20	0	0
8.	One pair do do do ...	15	0	0
9.	One gold nagaru (ನಾಗರು) stringled with twelve gold beads and silver back weighing $4\frac{3}{4}$ tolas including sealing wax ...	35	0	0
10.	One eight-cornered gold savanthige huvu (ಶಾವಂತಿಗೆ ಹುವು) with silver back weighing about $10\frac{3}{4}$ tolas including wax ...	50	0	0
11.	One gold savanthige huvu with silver back weighing $6\frac{3}{4}$th tolas with wax ...	25	0	0
12.	One gold addige (ಅಡ್ಡಿಗೆ) weighing $7\frac{1}{2}$ tolas with wax and thread ...	80	0	0
13.	One gold bangle (ಕಪ್ಪು) weighing $7\frac{1}{2}$ tolas ...	120	0	0
14.	Two gold chowri kattu with silver back and screw (ಸುತ್ತು) weighing $5\frac{1}{2}$ tolas with wax	35	0	0
15.	One golden sara with gold beads, corals and thali weighing 6 tolas including wax	30	0	0
16.	Three strings of small gold beads with thali weighing $2\frac{3}{4}$ tolas including wax and glass beads	45	0	0
17.	One small golden savanthige huvu with silver back weighing 1 tola with wax	3	0	0
18.	A pair of golden ear ornaments (ಓಲಿ) each attached with two strings of tiny golden beads weighing $1\frac{3}{4}$ tolas with wax	25	0	0
19.	One pair of golden chalathumbu (ಚಳತುಂಬು) with ordinary pearls weighing $\frac{3}{4}$ tola	4	0	0
20.	One pair of golden ear ornaments (ಬುಗಡಿ) stringled with good pearls weighing $1\frac{3}{4}$ tolas	40	0	0
21.	One golden talisara with twelve gold beads, one tali, four corals and two stones weighing 2 tolas with wax and thread, etc.	6	0	0
22.	One silver waist belt with silver beads weighing $13\frac{1}{2}$ tolas	6	8	0
23.	Four big corals ordinary, used for haradigundu (ಹರಡಿಗುಂಡು)	13	0	0
24.	One silver waist thread with screw weighing nine tolas .. .	6	0	0
25.	Silver bangles weighing 24 tolas	12	0	0
26.	One silver sivadara weighing 14 tolas	7	0	0
27.	Two pairs of pearl ear-rings tied up with gold and silver wires ...	1	0	0
28.	One twisted silver bangle weighing $5\frac{3}{4}$ tolas	3	0	0
29.	A piece of gold and a sheet of gold weighing two pies in all	5	0	0
30.	One Surthi rupee and seven Raja rupees somewhat black as if it were hidden in the earth	8	0	0
31.	Three scales used for weighing gold and silver, one of which has a wooden case	2	0	0
32.	Cash tied up in a white cloth	100	0	0
33.	Cash found in a bag	8	0	0
34.	Cash found in a money purse	6	0	
35.	Two laced chunadi (ಚುನಡಿ) turbans	3	0	0
36.	One red silk handkerchief (big) with big chowklies..	8	0	0
37.	Do do with small chowklies and rudrakshi ...	3	0	0
38.	One dhoti with silk rudrakshi border	6	0	0
39.	Do with silk kusambi rudrakshi border	5	0	0
40.	One silk bordered panche	3	0	0
41.	One panche with a tiny silk border	1	8	0
42.	One unwritten stamp paper No. 989, dated 4th October 1901, of the value of Re. 1 bearing the name of Karibasavaiya, son of Dodda Subbaiya of Malogahalli.			
43.	Do do No. 415, dated 1st August 1901, of the value of annas 4 bearing the name of Nanja, son of Balagai Huva of Honnur.			

44. One unwritten stamp paper No. 3093, dated 14th May 1903, of the value of annas 4, bearing the name of one Bomma of Vulikebbemole.
45. Do do No. 918, dated 27th September 1901, of the value of annas 4, bearing the name of one Samba, son of Balagai Dyavara Gudda of Honnur.
46. One letter written by Madavanahalli Vustad Channasetty to Puttamarappa, brother of Duggahatti Hutchappa and posted.
47. Two letters of enquiry by Nanjaiya.

Total 870 0 0

C. KRISHNA RAO,
for *Supt. of Police, Mysore Dt.*

Descriptive roll of a man found dead on 29th March 1906, under a tree in the field of Kabballi Chandriah, situated by the side of the foot-path between Hangala and Devarahalli within the limits of the Gundlupet Taluk :—

Name—Not known.
Caste— Do
Residence—Do
Height—5 feet, 6 inches.
Age—About 60 years.
Complexion—Dark.
Descriptive marks—Round face ; had a tuft of hair on his head ; grey hairs on the head, chin, etc., Body, etc., emaciated.
Property found—A string containing bhadrashi and an idol named Manteswami made up of copper and silver round the neck.

Descriptive roll of a dead body found in Gundlupet Kasba on 28th February 1906 :—

Name—Munisawmy Pillay.
Caste—Vellal Wakkaliga.
Age—About 45 years.
Residence—Sultan bateri.
Height—5¼ feet.
Complexion—Dark, long face.
Property found—A small copper vessel (ಬೋಗಿ) ; a tin cup (ಟಿನ್).
Remarks—Died of fever.

MAHOMED JAFFER,
Supt. of Police, Mysore Dt.

List of property stolen from the house of Halagar Venkata Krishnaiya on the night of the 15th March 1906 at Mil Koppa, Koppa Taluk, Kadur District.

	Description of the articles.	*Value.* Rs.	a.	p.
Gold—				
1.	One pair of gold vanki 40 varahas, gold thread on one of them has snapped	200	0	0
2.	One gold bandi or sarige 40 varahas, has a thali with Kanarese letters (ಹಾ. ವೆಂ. ಕೃ.) on the inside	200	0	0
3.	One gold gajjay addike sara, 18 varahas	90	0	0
4.	Gold kattani sara of 7 rows with 7 thalis, 20 varahas	100	0	0
5.	Two mukuras with 11 gold pearls each and a ruby at the hasp end ...	100	0	0
6.	A pair of chandra mura, ruby set with and also pearls	50	0	0
7.	A pair of gold gundina benduvolay, 2 varahas	10	0	0
8.	A pair of gold bugadi, 3 varahas. A bead in the crown of one of them is missing	15	0	0
9.	A pair of mango shaped bavali set with false stones but good pearls ...	5	0	0
10.	A pair of parrot peak shaped volay (ಗಿಣಿ ವಾಲೆ) with 6 chalathumbus set false and good pearls with two gold sarapanis	60	0	0
11.	One gold tirupina huvu, 3 varahas, silver back plate with Kanarese letters (ಹಾ. ವೆಂ. ಕೃ.)	15	0	0
12.	Ditto of 1 varaha	5	0	0
13.	Gold kamalada huvu, 2½ varahas, lac wanting set with a ruby in the centre	12	8	0
14.	One gold ring with gold coin on	14	0	0
15.	One gold ikkeri coin	5	0	0
16.	Gold gejjay sara with 60 beads, 30 varahas	150	0	0

		Value. Rs.	a.	p.
17.	One small ingot of gold, 1½ hanas weight	0	12	0
18.	Gold nagara with gold beads and silver back plate, 4 varahas ...	20	0	0
19.	One pair of gold small chalathumbu without pearls	5	0	0
20.	Two chowkalies consisting of 8 gold pearls	24	0	0
21.	A pair of gold sarage bangles with copper bar embedded and hinged at the back, 3 varahas weight of gold	15	0	0
22.	Two gold pearls, one big and one small	10	0	0
23.	One wrishti sara, made of gold beads and corals with the thali of Hanuman, silver hook at end	20	0	0
Silver—				
24.	Silver woven waist thread, 12 tolas	10	0	0
25.	Silver thavachi tirupu, 1 tola	0	12	0
26.	Cash 2 rupees	2	0	0
	Total ...	1,139	0	0

N. SUBBA RAO,
for *Inspector-General of Police.*

IN THE COURT OF THE ASSISTANT COMMISSIONER AND 1ST CLASS MAGISTRATE, KOLAR GOLD FIELDS.

Notice dated 19th April 1906.

Police property Form No. 31, dated 10th March 1906, of Champion Station, A. Division.

Notice is hereby given that the marginally noted properties produced by the Champion Police, will be confiscated and sold for Government, if not claimed within six months.

1. Cash annas 15.
2. A piece of candle.
3. Some playing cards.
4. A cumbli piece.
5. A gunny bag piece.

Notice dated 19th April 1906.

Police property Form No. 10, dated 31st March 1906, of Ooregum Station, B. Division.

Notice is hereby given that the marginally noted property produced by the Ooregum Police, will be sold by public auction, if not claimed within six months from the date of this notice.

A gold scarp pin.

R. B. PLUMER,
Asst. Comr. & 1st Class Magte.

MISCELLANEOUS.

MYSORE DISTRICT.

Notification dated 6th April 1906.

It is hereby notified that in satisfaction of arrears of land revenue due by Thammiah, Narasappiah and Gopalbhatta, Jodidars of jodi Dodda Somanahalli village, revenue defaulters, the undermentioned immovable property will be sold by public auction in the office of the Amildar of the Krishnarajpete Taluk on the 1st June 1906. The sale will commence at 12 noon and the property will be knocked down to the highest bidder without reserve. The sale will be conducted by the Assistant Commissioner in charge of the Krishnarajpete group of taluks.

2. The amount of revenue payable by the purchaser on the property for the whole of the year 1905-06 is Rs. 783-4-3, as shown in detail in the statement at foot.

3. Purchasers will be required to deposit twenty-five per cent of the purchase money at the time of sale, and where the remainder of the purchase money may not be paid within fifteen days from the date of the sale the money so deposited shall, be liable to forfeiture.

4. When such deposit shall not be made nor the remaining purchase money paid up, the property shall be re-sold at the expense and risk of the first purchaser.

5. The sale shall be stayed, if the defaulter or any person acting on his behalf or claiming an interest in the property, tenders the full amount of the arrears of revenue with the interest and other charges provided such tender be made before the property is knocked down.

6. The sale of the property will not become absolute until the sale has been confirmed by the Deputy Commissioner or by some other officer duly authorized to confirm the same.

7. Purchasers having completed the payment of the purchase money will, as soon as the sale has been confirmed by the Deputy Commissioner, be placed in immediate possession and the property will be registered in the name of the purchaser and a certificate of sale, signed and sealed by the Deputy Commissioner will be granted to him. It is to be distinctly understood that the Government are not responsible for errors of description or in estimated extent.

8. Provided parties deeming themselves aggrieved by the sale shall be at liberty to appeal to the Deputy Commissioner within thirty days from the day of sale, and also to appeal to Government against his order within the time prescribed by law and the purchase shall be conditional on the final order in such appeal.

SCHEDULE.

Taluk	Hobli	Village	Names of defaulters	Description of property: Buildings: Name of building	Buildings: Estimated value	Land: Number or name of land	Land: Dry, wet or garden	Land: Area	Land: Assessment	Amount of arrears due to Government including notice fees, etc.
								A. g.	Rs. a. p.	Rs. a. p.
Krishnarajpete	Sante Bachahalli	Jodi Dodda Somanahalli	Thammiah, Narasappiah and Gopalbhatta, Jodidars	...	...	...	Dry ...	511 27	529 4 0	783 4 3
							Garden.	4 8	15 0 0	
							Wet ...	...	...	
							Kharab.	47 31	...	
							Total ...	563 26	544 4 0	
							Estimated value ...			3,000 0 0

Entire village.

Boundaries on the east—Chikasomanahalli
Do west—Halasinahalli
Do north—Agale
Do south—Anchanahalli and Haravanahalli

Notification dated 7th April 1906.

It is hereby notified that in satisfaction of arrears of land revenue due by Sundrachar, Rangachar and 46 others of Jodi Somanathapur village, revenue defaulters, the undermentioned immovable property will be sold by public auction in the office of the Amildar of the T.-Narsipur Taluk on the 5th June 1906. The sale will commence at 11 A.M. and the property will be knocked down to the highest bidder without reserve. The sale will be conducted by the Assistant Commissioner in charge of the Nanjangud group of taluks.

2. The amount of revenue payable by the purchaser on the property for the whole of the year 1904-05 is Rs. 3,160-11-9 as shown in detail in the statement at foot.

3. Purchasers will be required to deposit twenty-five per cent of the purchase money at the time of sale, and where the remainder of the purchase money may not be paid within fifteen days from the date of the sale, the money so deposited shall be liable to forfeiture.

4. When such deposit shall not be made nor the remaining purchase money paid up, the property shall be re-sold at the expense and risk of the first purchaser.

5. The sale shall be stayed, if the defaulter or any person acting on his behalf or claiming an interest in the property, tenders the full amount of the arrears of revenue with the interest and other charges provided such tender be made before the property is knocked down.

6. The sale of the property will not become absolute until the sale has been confirmed by the Deputy Commissioner or by some other officer duly authorized to confirm the same.

7. Purchasers having completed the payment of the purchase money will, as soon as the sale has been confirmed by the Deputy Commissioner, be placed in immediate possession and the property will be registered in the name of the purchaser and a certificate of sale, signed and sealed by the Deputy Commissioner will be granted to him. It is to be distinctly understood that the Government are not responsible for errors of description or estimated extent.

8. Provided parties deeming themselves aggrieved by the sale shall be at liberty to appeal to the Deputy Commissioner within thirty days from the day of sale, and also to appeal to Government against his order within the time prescribed by law and the purchase shall be conditional on the final order in such appeal.

SCHEDULE.

Taluk	Hobli	Village	Names of defaulters	Description of property						Amount of arrears due to Government including notice fees, etc.
				Buildings		Land				
				Name of building	Estimated value	Number or name of land	Dry, wet or garden	Area	Assessment	
								A. g.	Rs. a. p.	Rs. a. p.
T.-Narsipur.	Sosale.	Jodi Somanathapura.	Sundarachar, Rangachar and 46 others.	Entire village ...	...			2,263 12	1,856 13 1	3,159 3 9 Notice fees, etc. ... 1 8 0 Total ... 3,160 11 9 plus interest up to the date of sale.

N. VENKATA RAO,
In charge, Dy. Comr.

HASSAN DISTRICT.

Memo dated 23rd March 1906.

Under Rule III of the Government Notification No. 11289—Ex. F. 3-1901, dated 7th January 1902, the Deputy Commissioner, Hassan District, hereby delegates to the Excise Assistant Commissioner, Hassan District, the following powers vested in him, under the Excise Regulation of 1901 :—

(1) Power to permit import of liquor or intoxicating drug into Mysore under Section 6.
(2) Power to permit export of liquor or intoxicating drug from Mysore under Section 7.
(3) Power to grant licenses for the exclusive privileges of manufacture, etc., under Section 16.
(4) Power to cancel or suspend licenses or permits under Section 26.

P. R. W. WETHERALL, *Dy. Comr.*

Notification dated 11th April 1906.

The levy of toll on the Hassan-Arsikere road in the Hassan District, having been sanctioned by Government in Proceedings No. 9511-50—L. B. (305-05)-2, dated 16th March 1906, the public are hereby informed that from and after the 1st May 1906, toll-gates will be established, one near the junction of the Tiptur-Dudda road with the Hassan-Arsikere road and another on the Hassan-Arsikere road on the Hassan side of Dudda.

1. Until the 1st July 1906, only half the rates as specified in the appended schedule will be levied on carts, etc., passing along the road.

2. Only one toll shall be levied at either of the two gates on any cart, etc., passing along the road, if within a period of twenty-four hours, *viz.*, from sunrise to sunrise.

3. No tolls shall be levied for the passage of carriages, carts or animals (*vide* Section 65 of the Local Boards Rules)—

(*a*) belonging to Local Boards.

(*b*) conveying District Fund servants on duty, or property in the custody of such servants,

(*c*) licensed by the District Board, during the period for which they have been licensed, or

(*d*) engaged by the Postal Department to convey mails. Mail tongas carrying passengers in addition to mails, are exempted from payment of tolls. (*Vide* Government Proceedings No. 9079-86—L. B. (315-05)-2, dated 5th March 1906.)

(*e*) No toll shall be paid to the passage of troops, or Military stores, or equipages, or of any Police or other Government officers on duty, or on passage of any property *bonâ fide* belonging to Government, as established by the production of a certificate from the Head of the Department to which it belongs.

4. A table of the authorized tolls shall be legibly written in English and in Kannada and shall be put up in a conspicuous place near the toll-gate.

5. Tolls shall be collected at the toll-gates only.

6. Any person who fraudulently or forcibly passes any toll-bar, without paying the proper toll, or who obstructs the toll-collector in the discharge of his duties, shall be liable on conviction before a Magistrate, to simple or rigorous imprisonment for any term not exceeding three months, or to a fine not exceeding 50 rupees.

7. When payment of any toll is made, a receipt shall be granted by the person to whom the payment is made in such form as the District Board may, from time to time, prescribe.

8. In all cases of resistance to the lawful authority of the toll-collectors appointed under these rules, all Police Officers shall assist the toll-collectors, when required, and for that purpose shall have the same power which they have in the execution of their ordinary Police duties.

SCHEDULE.

Particulars.	Rate.		
On every four-wheeled carriage	2	0	0
Do two-wheeled carriage	1	0	0
Do Ekka	0	4	0
Do hackney on springs	0	2	0
Do cart and hackney not on springs drawn by eight bullocks, buffaloes, horses, ponies, asses, or mules, if laden	1	8	0
Do do if not laden	0	8	0
On every cart and hackney drawn by six bullocks, buffaloes, horses, ponies, asses, or mules, if laden	0	12	0
Do do if not laden	0	6	0
Do cart and hackney drawn by four bullocks, buffaloes, horses, ponies, asses, or mules, if laden	0	8	0
Do do if not laden	0	4	0
Do cart and hackney drawn by two bullocks, buffaloes, horses, ponies, asses, or mules, if laden	0	4	0
Do do if not laden	0	2	0
Buffaloes or bullocks per head, if laden	0	1	0
Do if not laden	0	0	6
On every elephant	1	8	0
Do camel, if laden	0	8	0
Do camel, if not laden	0	4	0

Particulars.	Rate.
On every horse, if laden or ridden	0 1 6
Do horse, if unladen or led	0 0 9
Do tattu or mule, if laden or ridden	0 0 9
Do do unladen or led	0 0 6
Do ass, if laden or ridden	0 0 6
Do ass, unladen or led	0 0 3
Do sheep or goat or pig	0 0 1
Do palanquin, dooly, palna or tonjon with 8 bearers ...	1 0 0
Do do with 6 do ...	0 12 0
Do do with 4 do ...	0 8 0
Do do with 2 do ...	0 4 0

N. B.—No toll to be levied from foot-passengers. Animals drawing any vehicle for which toll can be demanded, are not to be also charged with toll.

P. R. W. WETHERALL,
President.

SHIMOGA DISTRICT.

Notification dated 12th April 1906.

Under the authority of Rule XII of the Government Notification No. 245—1300, dated 2nd October 1901, it is hereby notified for the information of the public that the Range Forest Officers are empowered to issue paid licenses for felling and transport of timber, bamboos and firewood from the District Forests (unreserved lands) of the Shimoga District:—

No.	Name of officer	Powers	Locality where the powers are to be exercised
1	Range Forest Officers	Power to issue paid licenses for the felling and removal of— 1. Timber of unreserved species. 2. Bamboos. 3. Dry firewood.	In the maidan tracts within their ranges.

All the Revenue, Forest and Police Officers are hereby authorised to check the transport of timber, bamboos and firewood in transit.

M. S. NARAYAN RAO, *Dy. Comr.*

KADUR DISTRICT.

Notice.

Notice is hereby given that a sum of Rs. 2-8-0, being the value of a kit box due to the deceased Shankarappa who was Lance Dafadar No. 84 of the Tarikere Taluk, will be forfeited to Government, if not claimed by his heirs within three months from this date. Persons having any claim thereto may apply for the amount to the undersigned within the time allowed.

B. RAMASWAMAIYA,
for *Dy. Comr.*

CHITALDRUG DISTRICT.

Notification dated 20th April 1906.

Mr. Burli Krishna Rao, Acting Amildar and 3rd Class Magistrate of the Chitaldrug Taluk, is hereby invested with the following additional powers to be exercised by him until he is relieved by Mr. P. Subba Rao, Acting Amildar:—

(1) Power to make orders prohibiting repetitions of nuisances, Section 143, Criminal Procedure Code.

(2) Power to make orders under Section 144.

(3) Power to hold inquests, Section 174.

(4) Power to take cognizance of offences upon complaint, Section 190.

(5) Power to take cognizance of offences upon Police reports, Section 190.

H. RAMANUJAIENGAR,
District Magistrate.

Abstract Notification dated 11th April 1906.

It is hereby notified for general information that the right of collecting tolls on the Harihar Bridge in the Chitaldrug District for one year from 1st July 1906 to 30th June 1907, will be sold by public auction in the Deputy Amildar's office at Harihar on the 29th May 1906 by the Deputy Commissioner or an Assistant Commissioner deputed by him for the purpose.

For further particulars, see original notification published at page 619 of the *Mysore Gazette* dated 19th April 1906.

B. BHIMA RAO,
for *Dy. Comr.*

IN THE COURT OF THE MUNSIFF AT KOLAR.

Miscellaneous Application No. 455 *of* 1905-06.

In the matter of the estate of Rajaramaiya, resident of Mulbagal ... *Deceased.*

(1) Raja Peddannasetti, son of Raja Muniyappasetti; (2) Muniswami, son of Raja Naranaiya, minor by guardian and uncle the 1st petitioner Raja Peddannasetti, residents of Mulbagal ... ... *Applicants.*

Whereas (1) Raja Peddannasetti, (2) Muniswami, minor by guardian and uncle, the 1st petitioner Raja Peddannasetti, residents of Mulbagal, claiming to be the brother and nephew, respectively, of the said Rajaramaiya, deceased, have applied to this Court for a certificate under Regulation VII of 1901, to collect debts payable to the extent of Rs. 88-10-3 in respect of the estate of the said Rajaramaiya, deceased, resident of Mulbagal.

Notice is hereby given of the said application; and all claimants in the estate of the said Rajaramaiya, deceased, are invited to appear in this Court on Friday the 22nd day of June 1906, when the petition of the said (1) Raja Peddannasetti, (2) Muniswami, minor by guardian and uncle, the 1st petitioner, Raja Peddannasetti, applicants, will be heard and the right to the certificate will be determined.

Given under my hand and the seal of the Court this 16th day of April 1906.

J. E. HOLT,
Munsiff.

IN THE COURT OF THE MUNSIFF OF SERINGAPATAM.

Miscellaneous Case No. 529 *of* 1905-06.

PRESENT: G. SATYAJI RAO, ESQ., B.A., B.L., MUNSIFF.

In the matter of the estate of Linge Gowda, resident of Gejjalagere, Maddur hobli, Mandya Taluk ... ... *Deceased.*

Thammanna Gowda ... ... *Applicant.*

Whereas Thammanna Gowda claiming to be the son of Linge Gowda, deceased, has applied to this Court for a certificate under Regulation VII of 1901, to collect debts to the extent of Rs. 723-6-4 payable in respect of the estate of Linge Gowda, deceased, resident of Gejjalagere, Mandya Taluk.

Notice is hereby given of the said application; and all claimants in the estate of the said Linge Gowda, deceased, are invited to appear in this Court on Wednesday the 30th day of May 1906, when the petition of the said Thammanna Gowda, the applicant, will be heard and the right to the certificate will be determined.

Given under my hand and the seal of the Court this 23rd day of February 1906.

Miscellaneous Case No. 623 *of* 1905-06.

In the matter of the estate of Kala Setti, resident of Chinya, Honakere Hobli, Nagamangala Taluk ... ... *Deceased.*

Venkatalatchamma ... ... *Applicant.*

Whereas Venkatalatchamma claiming to be the widow of the said Kala Setti, deceased, has applied to this Court for a certificate under Regulation VII of 1901, to collect debts to the extent of Rs. 587-5-0 payable in respect of the estate of Kala Setti, resident of Chinya.

Notice is hereby given of the said application, and all claimants in the estate of the said Kala Setti, deceased, are invited to appear in this Court on Thursday the 31st day of May 1906, when the petition of the said Venkatalatchamma, the applicant, will be heard and the right to the certificate will be determined.

Given under my hand and the seal of the Court this 30th day of March 1906.

Miscellaneous Case No. 715 *of* 1905-06.

In the matter of the estate of Veene Venkataramaiya, resident of Seringapatam ... ... *Deceased.*

Hiranyappa ... . *Applicant.*

Whereas Hiranyappa, claiming to be the younger brother of Veene Venkataramaiya, deceased, has applied to this Court for a certificate under Regulation VII of 1901, to receive halves of currency notes for Rs. 500 being the insured amount of the deceased Veene Venkataramaiya, standing in the Madras Bank to the credit of Meenakshamma deceased, widow of the said Veene Venkataramaiya, resident of Seringapatam.

Notice is hereby given of the said application; and all claimants in the estate of the said Veene Venkataramaiya, deceased, are invited to appear in this Court on Wednesday the 27th day of June 1906, when the petition of the said Hiranyappa, the applicant, will be heard and the right to the certificate will be determined.

Given under my hand and the seal of the Court this 17th day of April 1906.

G. SATHYAJI RAO, *Munsiff.*

IN THE COURT OF THE SUBORDINATE JUDGE, SHIMOGA.

PRESENT: S. VARADARAJAIENGAR, ESQ.

Mis. Application No. 145 *of* 1905-06.

In the matter of estate of P. Rajagopala Naidu ... *Deceased.*

P. Radhakrishna Naidu, minor, by his guardian and mother Kanakamma *Applicant.*

Whereas applicant above named, resident of Shimoga, claiming to be the son of the said P. Rajagopala Naidu, deceased, has applied to this Court for a certificate under Regulation, VII of 1901, to collect debts payable in respect of the estate of P. Rajagopala Naidu, deceased, resident of Shimoga.

Notice is hereby given of the said application; and all claimants in the estate of the said P. Rajagopala Naidu, deceased, are invited to appear in this Court on Tuesday the 29th day of May 1906, when the petition of the said P. Radhakrishna Naidu, minor, guardian by his mother Kanakamma, applicant, will be heard, and the right to the certificate will be determined.

Given under my hand and the seal of this Court, this the 10th day of April 1906.

Mis. Application No. 160 *of* 1905-06.

In the matter of estate of Ramadhyani Madva Row ... ... *Deceased.*

Seshagiriyachar, minor, by his guardian and mother Jeevoobayi ... *Applicant.*

Whereas the applicant abovenamed, resident of Shimoga, claiming to be the brother-in-law of the said Ramadhyani Madva Row, deceased, has applied to this Court for a certificate under Regulation, VII of 1901, to collect debts payable in respect of the estate of Ramadhyani Madva Row, deceased, resident of Shimoga.

Notice is hereby given of the said application; and all claimants in the estate of the said Ramadhyani Madva Row, deceased, are invited to appear in this Court on Friday the 1st day of June 1906, when the petition of the said Seshagiriyachar, minor, by his guardian Jeevoobayi, applicant, will be heard, and the right to the certificate will be determined.

Given under my hand and the seal of this Court, this the 10th day of April 1906.

S. VARADARAJAIENGAR,
Subordinate Judge.

IN THE COURT OF THE SUBORDINATE JUDGE, CHIKMAGALUR.

Miscellaneous Application No. 497 *of* 1905-06.

In the matter of the estate of Chakrapani Keshavacharya, resident of Chikmagalur ... ... *Deceased.*

Krishnamurthi, son of the deceased, minor, by his guardian Chakrapani Bhimachar, resident of Belur, Hassan District .. ... *Applicant.*

Whereas the above named applicant, alleging that he is the son of the deceased Chakrapani Keshavacharya, has applied to this Court for a certificate under Regulation, VII of 1901, to collect debts to the extent of Rs. 199 due to the estate of the deceased.

Notice is hereby given of the said application; and all claimants to the estate of the deceased are invited to appear before this Court, on 31st May 1906, when the petition of the said Krishnamurthi will be heard and the right to the certificate will be determined.

Given under my hand and seal of the Court on 2nd April 1906.

M. HUMZA HUSSEIN,
Subordinate Judge.

BANGALORE DIVISION.

Notification dated 5th April 1906.

The attention of public is invited to the notification in the *Mysore Gazette*, No. 15, dated 12th April 1906, calling for tenders for constructing quarters for the staff of the Government Distillery at Bangalore.

B. VENKATACHAR, *Executive Engineer.*

TUMKUR DIVISION.

Notification dated 10th April 1906.

Rupees seven being arrears due to B. Ganganna, contractor for restoring Thadasur tank, but not for A. R. of Bangalore, Honnavar road, as published in notification, dated 30th January 1906, has been outstanding in the accounts of this office since June 1905. It is hereby notified that if the party does not present himself for payment within one month from date of publication of this notification, the amount will be credited to Government as unclaimed deposits.

C. MADAVA ROW, *Executive Engineer.*

SHIMOGA DIVISION.

Notice dated 13th April 1906.

The public are hereby informed that Sudurhalla bridge, in $\frac{6}{7}$ mile of Shimoga-Hyderghar Ghat road, is under repairs, and it is not at present safe for traffic during nights. Temporary road is under construction.

C. A. MAHADEVA SASTRI, *Executive Engineer.*

BANGALORE CITY MUNICIPALITY.

Notice dated the 21st April 1906.

The public are hereby informed that a burial ground has been demarcated and allotted for the Jewish Community by the side of the New Mahomedan Burial Ground to the north of the Bangalore-Mysore road beyond the Police out-post as sanctioned in Government Proceedings No. 10484—Munl. (503-04), dated the 10th April 1906.

Notice dated 24th April 1906.

The undermentioned gentleman having consented to stand as Municipal Commissioner for VI Lal-Bagh Division, the voters of that Division are requested to present themselves at the Kalasipalya Police Station on Friday the 25th May 1906, from 8 to 10 A.M. and from 3 to 5 P.M., to give their votes. Printed tickets will be issued to them for the purpose on the spot :—

Serial No.—1.
No. in the supplemental list—1.
Name—M. R. Ry. M. Subbaiya, B.A.
Place of residence—18, Lal-Bagh high road

Notice dated 24th April 1906.

The undermentioned gentleman having consented to stand as Municipal Commissioner for VII Fort Division, the voters of that Division are requested to present themselves at the Old Palace on Monday the 28th May 1906, from 8 to 10 A.M. and from 3 to 5 P.M. to give their votes. Printed tickets will be issued to them for the purpose on the spot :—

Serial No.—1.
No. in the list published—81.
Name—M. R. Ry. B. Appajaiya.
Place of residence—45, 5th Main road, Chamarajpet.

Notice dated 24th April 1906.

The undermentioned gentleman having consented to stand as Municipal Commissioner for IX Malleswaram Division, the voters of that Division are requested to present themselves at the Malleswaram Station on Thursday the 31st May 1906, from 8 to 10 A.M. and from 3 to 5 P.M., to give their votes to the said gentleman. Printed tickets will be issued on the spot for the purpose :—

Serial No.	Number in the list published	Name	Place of residence
1	15	M. R. Ry. D. Venkata Ramaiya, B.A. ...	No. 5, 7th Main road, Malleswaram.

Additional name to be included in the list of Municipal Commissioners for No. II Division.

Serial No	No. in the list published	Name	Place of residence
3	152	M. R. Ry. K. H. Ramaiya, B.A. ...	97 Rangasami Gudi road.

Additional name to be included in the list of Municipal Commissioners for III Division.

Serial No.	No. in the list published	Name	Place of residence
5	Supplemental list No. 1	M. R. Ry. Dibbur Rudrappa	Dewan Surappa's lane.

Notice dated the 24th April 1906.

Under Sections 72 and 73 of the Bangalore Municipal Regulations of 1871, the public are informed, that the valuation and assessment of buildings, lands and shops newly built and improved within the past one year have been completed in the several divisions of the City. The assessment books are available for inspection of persons interested in the Collection Department of the Municipal Office, District Office road, on office days and during office hours. The President will proceed to revise the said valuation and assessment on the days and at the time noted below. Applications for revision will be received up to three days before the dates fixed for the respective divisions:—

Serial No.	Name of Division	Date fixed	Time
1	No. I Palace Division	1906 May 14th Monday	7-30 to 9-30 A.M.
2	,, II Balepet do	Do 16th Wednesday	Do
3	,, III Manavarthipet Division	Do 18th Friday ...	Do
4	,, IV Alsurpet Division	Do 22nd Tuesday	Do
5	,, V Nagarathapet Division	Do 24th Thursday ...	Do
6	,, VI Lal-Bagh do	Do 26th Saturday	Do
7	,, VII Fort do	Do 29th Tuesday	Do
8	,, VIII Basavangudi do	Do June 1st Friday	Do
9	,, IX Malleswaram do	Do June 4th Monday ...	Do

Notice dated 23rd April 1906.

The undermentioned gentleman having consented to stand as Municipal Commissioner for I Palace Division, the voters of that Division are requested to present themselves at the High Ground Police Station on Tuesday the 15th May 1906, from 8 to 10 A.M., and from 3 to 5 P.M., to give their votes for the said gentleman.

Printed tickets will be issued to them for the purpose on the spot.

Serial No.—1. | Name—Mr. I. Bronson.
No. in the list published—21. | Place of residence—1-1, Crescent road.

Notice dated 23rd April 1906.

The undermentioned gentlemen having consented to stand as Municipal Commissioners for II Balepet Division, the voters of that Division are requested to present themselves at the Balepet Police Station on Thursday the 17th May 1906 from 8 to 10 A.M. and from 3 to 5 P.M., to give their votes for the said gentlemen.

Printed tickets will be issued to them for the purpose on the spot.

Serial No.	No in the list published	Name	Place of residence
1	81	M. R. Ry. D. B. Ramachendra Moodaliar	1, Savar Lines road.
2	Supplemental list No 2	,, B. Gangiah	5, Kotige lane.

Notice dated 23rd April 1906.

The undermentioned gentlemen having consented to stand as Municipal Commissioners for III Manavarthipet Division, the voters of that Division are requested to present themselves at the Government Girls' School (Chikpet) on Saturday the 19th May 1906 from 8 to 10 A.M. and from 3 to 5 P.M., to give their votes to any two of the said gentlemen whom they desire to elect.

Printed tickets will be issued to them for the purpose on the spot.

Serial No.	No in the list published	Name	Place of residence
1	145	M. R. Ry. B. Veerabhadra Chetty	181, Arlepet.
2	53	,, B. K. Garuda Char	479, Taluk Cutcherry Road.
3	131	,, S. N. Subba Rao	18, Subramanya's street.
4	143	Mir Mahomed Ghouse Razvi Saib	144, Arlepet.

Notice dated 23rd April 1906.

The undermentioned gentlemen having consented to stand as Municipal Commissioners for IV Ulsurpete Division, the voters of that Division are requested to present themselves at the Yelahankagate Police Station on Monday the 21st May 1906 from 8 to 10 A.M. and from 3 to 5 P.M., to give their votes to any two of the said gentlemen whom they desire to elect.

Printed tickets will be issued to them for the purpose on the spot.

Serial No.	No. in the list published	Name	Place of residence
1	4	M. R. Ry. N. Ramabhadriah	84, Cubbon road.
2	44	,, B. Basappa Chetty	19, Jumma Masjid road.
3	97	,, S. R. Nanjundappa	145, Taluk Cutcherry road.

Notice dated 23rd April 1906.

The undermentioned gentleman having consented to stand as Municipal Commissioner for VIII Basavangudi Division, the voters of that Division are requested to present themselves at the Police Station, Basavangudi on Wednesday the 30th May 1906, from 8 to 10 A.M. and from 3 to 5 P.M., to give their votes to the said gentleman.

Printed tickets will be issued to them for the purpose on the spot.

Serial No.—1.
No. in the list published—33.
Name—M. R. Ry. M. K. Krishna Murti Rao.
Place of residence—7, 1st Cross road, Basavangudi.

A. S. NAGAVKAR, *President.*

MYSORE CITY MUNICIPALITY.

PROCEEDINGS OF THE ORDINARY MEETING OF THE MUNICIPAL COMMISSIONERS FOR THE CITY OF MYSORE, HELD IN THE RANGACHARLU MEMORIAL HALL AT 8 A.M., ON SATURDAY THE 31ST MARCH 1906.

PRESENT.

The Vice-President.
The Civil Surgeon.
The Executive Engineer, Mysore Dn.
Mr. Venkatakrishnaiya.
,, K. Chendrasekhariah.
,, Amble Annaiya Pandit.
,, N. Srikantaiya.
,, Narasimhaswami.
Mr. Krishnappaji Urs.
,, M. C. Ranga Iyengar.
,, A. Subbanna.
,, Tiruvengada Mudaliar.
,, M. Anantharajaiya.
,, Rahimatulla Ahmed Sait.
,, Hussain Ali Baig Saheb.
,, Madappa.

ABSENT.

The President.
The Principal of the Maharaja's College.
The Amildar of the Mysore Taluk.
Mr. Syed Mohadeen Saheb.

Plague and Mortuary return for the month of February 1906.

Mohallas	Number of births	Average births in the previous three years for the corresponding month of February	Deaths from—						Average deaths in the previous three years for the corresponding month of February					
			Plague	Cholera	Small-pox	Fever	Other causes	Total	Plague	Cholera	Small-pox	Fever	Other causes	Total
Lashkar ...	10	19	...	...	...	2	25	27	4	..	8	...	39	51
Mandi ...	24	21		...	1	1	24	26	5	.	8	2	30	45
Devaraj ...	18	6	...	...	2	2	26	30	5	..	9	1	27	42
Chamraj ...	39	30	...	...	1	4	11	16	6	..	6	5	21	38
Krishnaraj ...	23	11	...	...	...	1	24	25	3	...	11	2	26	42
Fort ...	4	4	...	...	1	...	4	5	1	...	1	1	6	9
Nazarbad ...	4	6	..	...	...	1	7	8	3	...	2	1	12	18
Isolation Hospital...	...	...	...	...	3	...	3	6	7	...	1	...	...	8
Total ...	122	97	...	...	8	11	124	143	34	...	46	12	161	253

Total number of births and deaths from 1st March to 9th March 1906.

Mohallas	Number of births	Deaths from—					
		Plague	Cholera	Small-pox	Fever	Other causes	Total
Lashkar ...	9	...	...	...	...	13	13
Mandi ...	6	...	...	...	...	13	13
Devaraj ...	3	...	...	...	...	13	13
Chamraj ...	6	...	..	...	...	4	4
Krishnaraj ...	4	...	..	...	2	3	5
Fort ...	2	...	...	...	...	3	3
Nazarbad ...	2	...	...	...	...	2	2
Isolation Hospital ..	...	...	...	...	1	...	1
Total ...	32	...	...	...	3	51	54

The following are the statistics for the month of February 1906.

* *Her Highness the Maharani's Female Hospital.*

IN-PATIENTS.

Number of patients treated during the month ... ..
Number confined ... ...
Number of patients treated with instruments ... ...
Number treated for other diseases ... ...

OUT-PATIENTS.

Number of patients remained on the last day of January 1906 ...
Number admitted during February 1906 ... ...

Total treated ... ...

* Returns not received.

Dispensaries.

Names of dispensaries	Number of patients treated during the month	Number cured and discharged	Number absent	Died	Remaining	Average daily sick
Old Agrahar Dispensary ...	2,123	1,992	...	...	131	164
Nazarbad do ...	1,135	1,043	14	...	78	80
Erangere do ...	1,386	1,185	60	2	139	119
Indigenous Hospital (Karnatic) ...	3,086	2,900	17	...	169	178
Do (Unani) ..	2,304	2,173	12	...	119	131
Nikhilarogahari Dispensary ..	1,705	1,632	...	...	73	60

Midwifery.

The number of labour cases attended by the midwife attached to Old Agrahar Dispensary 5
Do do Erangere do 11

Water in Kukerhalli tank.

At the end of February 1906 ... ... Nil
Do of 1905 ... ... ,,

Rainfall.

For February 1906 ... ... Nil
Do 1905 ... ... ,,

I. Consideration of accounts of receipts and expenditure and other statistics for the month of February 1906.

Resolved that, as the Auditor's report has not been received, the accounts be brought up for consideration before the next Board.

II. Sub-Committee's report along with the budget estimates of the ensuing year.

Resolved that the budget be passed.

III. Government Proceedings No. 8912-14—Ml. (270-05)-6, dated the 28th February 1906, regarding the retransfer of temporary conservancy establishment of the three Mohallas now under the Trust Board's operation to the Improvement Trust Board.

Recorded.

IV. Government Proceedings No. 8909-11—Ml. (22-05)-4, dated 28th February 1906, informing that the levy of scavenging cess in Nazarbad Mohalla will be undertaken by the Trust Board as directed in Government Order of the 19th October 1905.

Resolved that the decision of Government on the reference made by the Trust Board on the subject be awaited.

V. Government Proceedings No. Fl. 4809-11—296-05, dated 1st February 1906, directing that the cost of covering the open channel in which the conduit from Balagola finally terminates about half a mile before it joins the filter bed in Mysore, will be paid by the Public Works Department out of the State Fund.

Recorded with thanks.

VI. Comptroller's docket No. 4834, dated 27th February 1906, forwarding for information of the Board the final accounts of the Mysore City Improvement Trust Board for the year 1904-05.

Recorded.

VII. Petition from toll-gate contractor Dallali Ranganna claiming damages for the reasons stated in his application.

Resolved that the petitioner be informed that the Municipality did not prohibit the traffic of timber carts on the Manuntoddy road and therefore the Board is unable to accede to his request.

VIII. Correspondence ending with Excise Divisional Officer's yadast No. 1089, dated 11th February 1904, regarding the Municipal tax due from Sahukar Bajjanna for the Bonded Depot.

Resolved that Sahukar Bajjanna be informed that he is liable to pay the tax.

IX. Reappropriation statement of budget grants for the year 1904-05.

Resolved that the reappropriation statement be passed.

X. President's memo proposing that Her Highness the Maharani's Hospital be handed over to the Medical Department to be run on the same line as General Hospital.

Resolved that, the Board is of opinion, no change seems to be necessary for the present.

XI. Docket No. 5236, dated 17th March 1906, from the Senior Surgeon and Sanitary Commissioner, forwarding with his recommendation for favourable consideration, an extract from the letter of C. Lakshmiah, Hospital Assistant, praying for an allowance.

Resolved that as the Board does not contribute towards his pay and as the institution is not a Local Fund Dispensary under the entire charge of the Hospital Assistant, no allowance can be paid by the Municipal Board.

XII. Mr. Subba Krishna Rao's notice claiming the amount of compensation due to him for his well in the College road and papers connected therewith.

Resolved that the file of papers be sent to Messrs. Rangiengar and Chendrasekariah for favour of opinion.

XIII. Docket No. 455, dated 15th March 1906, from the Executive Engineer, Water-supply and Stores Division, intimating the probable amount required for the annual maintenance of turbines at Balagola for the year 1906-07.

Resolved that provision be made in the budget for a sum of Rs. 2,360 for the maintenance of the turbines.

XIV. Correspondence ending with memo No. 3030, dated 20th March 1906, from the Deputy Commissioner anent the acquisition of Wesleyan Mission Boys' school at Mysore.

Resolved with the observation so much of the site as is required for the extension of the market and the continuation of the road to the north of the required extension may be retained and the remaining portion measured, demarcated and handed over to the new school. Government be requested to sanction this proposal.

XV. Proposition by Messrs. Amble Anniah Pandit and Narasimhaswamy on the following points:—

(1) Provision to be made in the next year's budget for examining the conduit line and executing necessary repairs thereto.

(2) Provision to be made in the next year's budget to construct a bathing pond in the Subrayanakere tank as proposed by the Board some time back.

(3) Provision to be made in the next year's budget for fencing the vacant ground to the east of Subrayankere tank.

(4) Provision to be made in the next year's budget for constructing new market in the Western extension.

(5) Provision to be made in the next year's budget for three Sanitary Inspectors to be appointed to the City as per Government Orders.

(6) To keep separate accounts for the receipt and expenditure of the Rangacharlu Memorial Hall.

(1) Provision has already been made.

(2, 3 and 4) As provision has already been made from the Extension funds, there is no necessity to include these items in the budget.

(5) *Resolved* that necessary provision be made for four Inspectors and one Chief Inspector as per Government Order sanctioning the Sanitary scheme.

(6) *Resolved* that separate accounts be maintained for the income and expenditure relating to the Memorial Hall.

XVI. Remission statements of irrecoverable arrears.

Resolved that the irrecoverable arrears amounting to Rs. 5,150-5-7 be remitted.

Cash Account Current during the month of February 1906.

Budget head	Receipts	For Feb. 1906	For Feb. 1905
		Rs. a. p.	Rs. a. p.
I	Octroi—		
	Class I—(a) Cocoanuts, fresh ...	573 4 0	498 10 9
	(b) Do dry ...	32 15 6	46 14 0
	(c) Betel-leaves ...	464 4 3	363 10 0
	(d) Sugar ...	601 0 9	228 3 5
	(e) Jaggory ..	386 0 5	261 12 9
	(f) Ghee ..	618 9 1	422 4 6
	(g) Butter ...	75 2 0	71 12 1
	Class II—Sheep, goats and bullocks.	537 0 0	493 0 0
	Class III—Oil and oil-seeds ...	237 15 8	339 14 8
	Class III—(a) Kerosine oil ...	457 6 0	293 0 0
	Class IV—Timber and chunam.	338 13 8	325 1 7
	Class VI—Tobacco ...	114 6 3	189 11 5
	Class VII—Cloths ...	1,974 13 10	1,612 14 8
	Total ...	6,411 11 5	5,146 13 10
II	Tax on houses and lands ...	620 3 0	1,762 7 1
III	License Receipts—		
	(a) Liquor Shops—		
	1. Regn. fee from Europe liquor shops.	.....	.....
	2. Do retail arrack shops ...	70 0 0	.....
	3. Refreshment rooms ...	.....	.....
	4. Excess sale of arrack over 55 gallons.	303 4 0	218 0 0
	Total (a) ...	373 4 0	218 0 0
	(b) Other Licenses—		
	1. Slaughter-house fees ...	60 8 0 +181 8 0	60 0 0
	2. Cart-stand fees ...	14 1 6 +41 4 0	19 14 9
	3. Fees from cattle fair ...	18 12 0 +15 0 0	17 0 0
	4. Devaraj Market daily fees..	98 0 0	123 0 0
	5. Mandi do ...	25 8 0 +76 8 0	29 0 0
	6. Tobacco dealers ...	2 0 0	.....
	7. Brick-kilns, etc. ...	.....	.....
	Total (b) ...	533 1 6	248 14 9
IV	Carriage tax	14 0 0	51 8 0
V	Tax on animals	18 0 0	68 8 0
VI	Tolls and ferries ...	1,903 8 0 +126 2 0	1,856 2 0
VII	Other taxes—Mohatarfa—		
	a. Shop tax	159 8 0	505 13 4
	b. Loom tax	.....	.....
	c. Oil-mill tax	16 0 0	40 0 0
	d. Cart tax	10 0 0	16 0 0
	e. Water tax	...	.....
	Total ...	185 8 0	561 13 4
VIII	Rents—		
	a. Houses	396 12 0	140 3 9
	b. Lands	21 14 0 +73 10 0	55 12 0
	c. Devaraj Market Shops ...	368 8 0 +75 0 0	401 8 0
	d. Mandi do ..	95 6 0 +90 0 0	105 12 0
	e. Beef-butchers' stalls ...	7 0 0 +10 8 0	3 4 0
	Total ...	1,138 10 0	706 7 9

Budget head	Expenditure	For Feb. 1906	For Feb. 1905	Remarks
		Rs. a. p.	Rs. a. p	
II	Head Office—			
	1. Vice-President's allowance ...	500 0 0	.....	
	2. Establishment	229 0 0	224 0 0	
	3. Contingent	1 4 6	18 15 0	
	4. Printing charges ...	.....	.....	
	5. Advertisement charges ...	.....	.....	
	6. Furniture	.....	.....	
	7. Clothing	29 0 0	.....	
	8. Audit charges	.....	.....	
	Total ...	759 4 6	242 15 0	
III	Collection—			
	1. Octroi establishment ...	623 10 4	589 2 9	
	2. Do contingent ...	14 0 0	25 0 0	
	3. Printing charges ...	.....	.....	
	4. Rewards to detective smugglers	.....	.....	
	5. Mohatarfa establishment ...	229 0 0	291 0 0	
	6. Do contingent and printing	8 2 3	0 8 0	
	7. Market establishment ...	39 0 0	38 8 0	
	Total ...	913 12 7	941 2 9	
IV	Conservancy—			
	1. Establishment	1,996 3 4	1,991 15 6	
	2. Carts	545 10 2	538 12 8	
	3. Repairing night soil carts ...	15 2 0	.....	
	4. Tools and baskets ...	112 7 0	12 13 0	
	5. Painting street boards and door numbers.	.....	.....	
	6. Contingent	0 5 0 +1 2 6	.....	
	7. Purchase of dust bins ...	128 7 6	.....	
	Total ...	2,799 5 6	2,543 9 2	
VI	Registration of Births and Deaths			
	1. Plague establishment ...	554 13 5	636 6 10	
	2. Rewards for information ...	.....	.....	
	Total ...	554 13 5	636 6 10	
VII	Lighting—			
	Establishment charges ...	153 14 10	151 4 0	
	1. Lighting lamps by contract, oil	499 11 0	512 12 0	
	2. Colouring lamp-posts, etc. ...	51 12 0	.....	
	3. New lanterns and burners replaced	.....	.....	
	Total ...	705 5 10	664 0 0	
VIII	Public Works—			
	1. Supervision	276 6 0	367 2 8	
	2. Roads, original	.....	.....	
	3. Do repairs	499 6 10	680 4 10	
	4. Drains, original	.....	54 10 3	
	5. Do repairs	.....	.....	
	6. Water-supply, original ...	.....	.....	
	7. Do repairs	.....	.....	
	8. Buildings, original ...	.....	.....	
	9. Do repairs ...	.....	.....	
	10. Road watering	.....	.....	
	11. Other works, original ...	.....	.....	
	12. Do repairs ...	.....	.....	
	13. Compensation	.....	.....	
	14. Reserve ...	.....	.....	
	15. Tools and plant	.....	35 4 0	
	16. Transfer to other Departments	.....	.....	
	Total ..	775 6 10	1,137 5 9	

Cash Account Current during the month of February 1906—*concld.*

Budget head	Receipts	For Feb. 1906	For Feb. 1905
		Rs. a. p.	Rs. a. p.
IX	Fines	.....	1 6 0
X	Miscellaneous—		
	1. Sale of houses and lands ...	.....	2 2 8
	2. Fines for cattle trespass ...	53 4 0	60 5 0
	3. Sale of stray cattle ...	.....	.....
	4. Fees for fodder charges ...	13 11 9	19 14 2
	5. Sale of manure ...	16 3 10+ 38 11 6	3 14 6
	6. Sale of grass ...	70 0 0	.....
	7. Sale of smuggled goods ...	.....	6 11 0
	8. Amarayi	81 2 0	.....
	9. Notice and warrant fees ...	11 12 0	11 8 8
	10. Contribution from D. P. W.	.....	.....
	11. Sale of trees	.....	2 1 6
	12. Sale of store articles ...	0 6 0	.....
	13. Sale of empty tin boxes, etc.	35 8 0	46 15 0
	14. Water tax	152 4 0	331 15 10
	15. Cost of Patta (O. I.) ...	0 0 6	2 0 0
	Total ...	472 15 7	487 8 4
	Payments for Municipal services rendered to individuals ...	1 12 0	1 10 0
	Total Receipts ...	11,798 11 6	11,111 3 1
	Stock Account ...	1 2 6	2 5 6
	Public Works carried out ...	6 0 0	.....
	Advance Adjustment ...	.....	.....
	Deposits Received ...	200 13 7	910 3 7
	Total Receipts ...	12,006 11 7	12,023 12 2
	Opening Balance.		
	Actuals Rs. / Deposits ,, / Imprests ,,	.....	.....
	Cheques drawn during the month	.....	.....
	Actuals ... Rs.	.....	.....
	Advances ... ,,	.....	.....
	Deposits ... ,,	.....	.....
	Book adjustment as per Comptroller's intimation.	.....	.....
	Grand Total ...	.....	.....

Budget head	Expenditure	For Feb. 1906	For Feb. 1905
		Rs. a. p.	Rs. a. p.
IX	Charitable Grants—		
	1. Dispensary in Old Agrahar ...	.....	.....
	2. Do in Erangere ...	.....	.....
	3. Do in Nazarbad ...	.....	.....
	4. Indigenous Hospital ...	.....	.....
	5. Nikhilarogahari Hospital ...	.....	.....
	6. Maternity	28 0 0	30 0 0
	7. Vaccination	39 0 0	27 0 0
	8. Lanoline paste	.....	.....
	Total ...	67 0 0	57 0 0
X	Education	649 0 0	774 0 0
XI	Miscellaneous—		
	a. Repayment of loan ...	.....	.....
	b. Refund of excess collection ..	.....	51 15 4
	c. Pound establishment ...	62 0 0	60 15 6
	d. Fodder charges	11 3 9	1 6 7
	e. Rewards to dog and snake-killers	53 2 0	18 4 6
	f. Pension charges ...	.....	.....
	g. Fairs and festivals ...	12 0 0	12 0 0
	h. Town Hall establishment ..	26 0 0	26 0 0
	i. Do other charges ..	.....	.....
	j. Law expenses	.....	.....
	k. Clock Tower Caroner's pay.	.....	.....
	l. Tank watcher's pay ...	15 0 0	15 0 0
	m. People's Park establishment.	62 0 0	62 0 0
	n. Do other charges .	.....	8 12 9
	o. Water maintenance establishment	169 3 0	197 14 5
	p. Do other charges.	224 4 7	.....
	q. Watch-maker's allowance ...	15 0 0	15 0 0
	r. Ten per cent commission to pound-keeper	.....	.....
	s. Vaniviles Water Works establishment ...	305 0 0	303 14 5
	t. Do other charges.	79 0 0	355 2 0
	u. Care-taker's Estt. charges ...	5 0 0	.....
	v. Conservancy special charges.	858 15 1	.....
	Total ...	1,927 12 5	1,128 5 6
	Total Expenditure ...	9,151 13 1	8,127 13 0
	Stock Account ...	.....	204 12 9
	Transfers to other Depts. ...	87 0 0	.....
	Advance Paid ...	14 0 0	.....
	Deposits Paid ...	52 0 0+ 949 5 6	83 0 0
	Total Expenditure ...	10,254 2 7	8,415 9 9
	Closing Balance.		
	Actuals ... Rs. / Deposits ... ,, / Imprests ... ,,	.....	.....
	Amount remitted to Treasury.	.....	.....
	Actuals ... Rs.	.....	.....
	Advances ... ,,	.....	.....
	Deposits ... ,,	.....	.....
	Book Adjustment as per Comptroller's intimation.	.....	.....
	Grand Total ...	.....	.....

Notice dated 14th April 1906.

The attention of the public is invited to the notification published on page 576 of the *Mysore Gazette*, Part II, dated the 12th April 1906, regarding the sale of the right to collect tolls in the City of Mysore, for the year 1906-07, *i.e.*, from the 1st July 1906 up to the 30th June 1907.

Notice dated 18th April 1906.

Under Sections 72 and 73 of the Mysore City Municipal Regulations, III of 1888, the public are informed that the valuation and assessment of buildings and shops in the New Holageri of Chamraj Mohalla and in the Ediga Extensions of Mandi Mohalla have been completed. The Assessment Book is available for inspection by persons interested in the Collection Department of the Municipal Office, Rangacharlu Memorial Hall, on office days and during office hours. The President will proceed to revise the said valuation and assessment on Tuesday the 22nd May 1906. Applications for revision will be received for three days before the date fixed for the revision.

C. VENKATA RAO, for *President.*

MYSORE GOVERNMENT MUSEUM, BANGALORE.

Visitors to the Mysore Government Museum, Bangalore, during the month of March 1906.

Signatures made in—										Total of signatures		Unable to sign No. of—		Total of visitors	Daily average, exclusive of Sundays and holidays.
English															
Europeans	Natives	Tamil	Telugu	Kanarese	Hindustani	Marathi	Guzarati	Nagari	Malayalam	Males	Females	Men and boys	Women and girls		
164	738	141	125	353	37	14	2	..	..	1,535	58	5,609	5,091	12,293	455

J. CAMERON,
Supt., Mysore Govt. Museum, Bangalore.

Notice dated 5th April 1906.

The undersigned hereby gives notice that a month after date, he intends moving the Hon'ble Chief Court to enrol him as an Advocate thereof.

SHIKARIPUR SUBRAMANYA, B.A., *First Grade Pleader.*

CINCHONA FEBRIFUGE.

Cinchona Febrifuge can be purchased by all Government Officers and by any one taking *six pounds* at a time from the Superintendent, Botanical Garden, Calcutta, at the following rates:—per four-ounce tin, *Rs.* 2-8, per eight-ounce tin, *Rs.* 5; per pound tin, *Rs.* 10. The general public can be supplied by the Superintendent, Botanical Garden, *for Cash only*, at the undernoted rates:—per four-ounce tin, *Rs.* 3; per eight-ounce tin, *Rs.* 6; per pound-tin, *Rs.* 12 This medicine is also sold by the principal European and Native Druggists in Calcutta. Postage—four annas per four-ounce tin, eight annas per eight-ounce tin, and twelve annas per pound-tin in addition to the foregoing rates.

Catalogue of Books registered under the Government of Mysore in accordance with

Title in full	Language in which the book is written	Name of Author, Translator, or Editor of the book or any part thereof	Subject	Place of printing and place of publication	Name or firm of the printer and the name or firm of the publisher
1	2	3	4	5	6
BOOKS.					*i.—In the English or*
Newspaper Persecution in Mysore ...	English ..	M. Srinivasiengar...	Miscellaneous	Bangalore.	Mysore Standard Press.
					ii.—In the Vernaculars
ಅರೇಬಿಯನ್ ನೈಟ್ಸ್ ಎಂಬ ಯವನ ಯಾಮಿನೀ ವಿನೋದ ಕಥೆಗಳು. Arabian Nights Entertainments ...	Kannada ...	(Translator) P. Vedamitra ..	Fiction ..	Mysore ...	Graduates' Trading Association Press, Printer; P. V. Mitra, T. A. Shreshti and M. Aruldasappa, Publishers.
ಕೊಹಿನೂರು. Kohinûru	Do ...	(Translator) B. Venkatachar ..	Do ..	Do ..	Graduates' Trading Association Press, Printer; L. Ramachandra Rao, Publisher.
ಚಿತ್ರಮುಖವಾಗಿ ಹಿಂದೂದೇಶ ಪ್ರದಕ್ಷಿಣ. Pictorial Tour Round India	Do ...	(Translator) Rev. G. Wesley .	Miscellaneous	Do ..	Wesleyan Mission Press, Printer; Christian Literature Society, Publisher.
ದೇವರ ಜಾತ್ರೆ ಪದಗಳು. Dêvara jâtre padagalu	Do ...	V. Puttanna ..	Do ...	Do ..	Sri Chamundeswari Press, Printer; M. R. Kuppusami Setty and Kodandapani Setty, Publishers.
ಪೋಲೀಸ್ ಕಾನ್ಸ್ಟೇಬ್ಲನ ಪ್ರಶ್ನೋತ್ತರ. Police constable's catechism... ..	Do ...	Mr. H. F. Francis Philips, Assistant Superintendent of Police, Coorg.	Do ...	Do ..	Graduates' Trading Association Press, Printer; Mr. H. F. Francis Philips, Publisher.
ಮುದ್ರಾಮಂಜೂಷವು. Mudrâ Manjûshavu	Do ..	Late John Stephenson.	Do ..	Do ..	Wesleyan Mission Press, Printer: Press Publishing Society, Publisher.

the provisions of Act XXV of 1867, during the quarter ending 31st March 1906.

Date of issue from the Press or of the publication.	Number of sheets, leaves or pages.	Size.	1st, 2nd or other number of edition.	No. of copies of which edition consists.	Whether printed or lithographed.	Price.	Name and residence of proprietor of copy-right or any portion thereof.	Date on which copy-right was secured.	Remarks
7	8	9	10	11	12	13	14	15	
other European Languages.						Rs. a. p.			
25th Dec. 1905	1 + VI + 80	Dy. 8 vo.	1st Edition	1,500	Printed.	Free	...	...	A collection of opinions taken from the columns of a few Indian Newspapers.
spoken in the Province.									
January 1906 ..	1 + 2 + 464	Dy. 8 vo.	1st Edition	1,000	Printed.	2 0 0	P. V. Mitra, T. A. Shreshti and M Aruldasappa, Mysore.	31st Mar. 1906	A new Kannada translation of the Arabian Nights.
...	1 + 1 + 1 + 1 + 1 + 180	Crown 8 vo.	Do	1,000	Do	0 12 0	B. Venkatachar, Mysore.	Do ...	Kannada translation of a Bengali historical novel.
March 1906...	1+1+1 +7.	Dy. 4 to.	Do	1,000	Do	0 8 0	...		"Pictorical Tour Round India" in Kannada.
Nov. 1905 ...	32 ...	Dy. 8 vo.	Do	1,000	Do	0 6 0	M. R. Kuppusami Setty and Kodandapani Setty, Mysore.	31st Mar. 1906	Songs in vulgar Kannada for villagers.
rd Oct. 1905	1+1+II + 100	Royal 16 mo.	nd Edition (Revised)	400	Do	..	...	...	Dialogues on matters relating to Police Administration intended for the use of constables.
Dec. 1905 ...	1+1+. +335	Dy. 8 vo.	3rd Edition Revised)	1,500	Do	1 8 0	...	...	A prose work based on the well known Sanskrit drama styled the Mudrarakshasa.

Catalogue of Books registered under the Government of Mysore in accordance with

Title in full	Language in which the book is written	Name of Author, Translator or Editor of the book or any part thereof	Subject	Place of printing and place of publication	Name or firm of the printer and the name or firm of the publisher
1	2	3	4	5	6
ಸೇತೂರಾಯರ ಕಥೆ ಮತ್ತು ಭೋಜನ ಕಾಲ ನಿರ್ಣಯ ಮತ್ತು ಕನಕದಾಸರ ಕಥೆ. Sêtûrâyara Kathê, Bhôjanakâla Niraṇya and Kanakadâsara Kathê.	Kannada ..	Vidwan Srinivasacharya, B. Raghavendracharya and Sivarama Sastri.	Miscellaneous	Bangalore	S. G. N. Press ...
ರಾಮಲಿಂಗ ಪದ್ಯಗಳು. Râmalinga Padyagal	Telugu ..	(Author) Totti Ramappa ...	Do ...	Do ...	Do ...
ಬಹುಬೆಲೆಯುಳ್ಳ ರತ್ನ. Bahu Beleyulla Ratna (short stories for children No. 1)	Kannada...	Miss Hargreaves ...	Religion ...	Mysore ...	Wesleyan Mission Press, Printer; Christian Literature Society, Publisher.
ರಾಕ್ಷಸನ ಕಥೆ. Râkshasana kathê (No 2) ...	Do ...	Do	Do ...	Do ...	Do ...
ಮೂರುಮಂದಿ ಮಕ್ಕಳು. Mûrumandi Makkalu (No. 3) ...	Do ...	Do ...	Do ...	Do	Do ...
ಸಿಟ್ಟೆಂಬ ರಾಕ್ಷಸನ ಕಥೆ. Sittemba Râkshasana kathê (No. 4) ...	Do	Do ...	D ...	Do ...	Do ...
ಉಪಾಧ್ಯಾಯನೂ ಹುಡುಗನೂ. Upâdhyâyanû Huduganû (No. 5) ...	Do ...	Do ..	Do ...	Do ...	Do
ಶ್ರೀವೀರಶೈವಾಮೃತ ಮಹಾಪುರಾಣವು, ೧ನೇ ಕಾಂಡ Srî Vîrasaivâmruta Mahâpurâṇavu, I Part	Do ...	N. Sivappa Sastri and S. Veerappa Sastri.	Do ...	Bangalore	Town Press, Printer; N. Sivappa Sastri and S. Veerappa Sastri, Publishers.
ಜ್ಞಾನ ಜಲ್ಲಡಿ Gnana Jalladi	Do ...	A. Basle, Esq. ..	Do ..	Do	Vichara Darpana Press, Printer; A. Basle, Esq., Publisher.

332

the provisions of Act XXV of 1867, during the quarter ending 31st March 1906.

Date of issue from the Press or of the publication.	Number of sheets, leaves or pages.	Size.	1st, 2nd, or other number of edition.	No. of copies of which edition consists.	Whether printed or lithographed.	Price.	Name and residence of proprietor of copy-right or any portion thereof.	Date on which copy-right was secured.	Remarks
7	8	9	10	11	12	13	14	15	
						Rs. a. p.			
25th Dec. 1905.	18+28	Dy. 8 vo.	First Edition	1,000	Printed	0 4 0	Jagadisa Vital Narayana Dass, Bangalore.	31st March 1906.	Songs describing the deeds of Setu Rau and the celebrated Kanakadasa.
2nd Mar. 1906.	1+166	Dy. 8 vo.	Do	1,000	Do	0 8 0	B. Basavappa Chetty, Bangalore.	Do ...	Telugu verses inculcating worldly wisdom.
December 1905.	6	Dy. 32 mo.	Do	1,000	Do	0 0 1	...	...	Short parables teaching religious truths.
Do ...	16	Do	Do	1,000	Do	0 0 1	...	...	Do do
Do ...	9	Do	Do	1,000	Do	0 0 1	...	...	Do do
Do ...	12	Do	Do	1,000	Do	0 0 1	...	...	Do d
Do ...	9	Do	Do	1,000	Do	0 0 1	...	...	Do do
11th Jan. 1906.	1+1+1+1+1+1+2+52+31	Dy. 4 to	Do	1,000	Do	1 0 0	N. Sivappa Sastri, Bangalore.	31st March 1906.	A long poem in Vardhika Shatpadi metre explaining in detail the tenets of the Virasaiva faith.
30th Dec. 1905.	22	Dy. 24 to	Do	1,000	Do	0 0 6	...	...	A Roman Catholic publication criticizing the religious views of the Protestants.

Catalogue of Books registered under the Government of Mysore in accordance with:

Title in full	Language in which the book is written	Name of Author, Translator or Editor of the book or any part thereof	Subject	Place of printing and place of publication	Name or firm of the printer and the name or firm of the publisher
1	2	3	4	5	6
ಹರಿಣೀಹರಣೋದ್ಧರಣ. Hariṇî Haraṇôddharaṇa	Kannada...	Sivalinga Devaru ...	Relig ...	Mysore ...	Sankara Vilas Press, Printer; Sivalinga Devaru, Publisher.
ಯೇಸುಸ್ವಾಮಿಯು ಹೇಳಿದ ಸಾಮ್ಯಗಳು. Parables of our Lord	Do ...	Miss Hargreaves ...	Do ..	Do ...	Wesleyan Mission Press, Printer; Christian Literature Society, Publisher.
					iii—In the Indian
					IV—In more than
ಗ್ರಾಮ್ಯ ಸಂಭಾಷಣೆಗಳು. Village Dialogues	Kannada & English.	Munshi Srinivasaiya, late Rev. D. Sanderson and Richard G. Hodson.	Miscellaneous.	Mysore ...	Wesleyan Mission Press, Printer; Press Publishing Society, Publisher.
ತಾವಾಗಿ ಇಂಗ್ಲಿಷ್ ಕಲಿಯುವಿಕೆ. Self English study	English and Kannada	Bharathi Sampangi Rama.	Do ...	Bangalore	S. G. N. Press and Town Press, Printers; Bharathi Sampangi Rama, Publisher.
ಉಭಯ ವೇದಾಂತಪ್ರವರ್ತನ ಸಭಾ Ubhayavêdânta Pravartana Sabhâ ...	Kannada & English.	Mr. R. Narasimhachar.	Do ...	Do ...	Mysore Standard Press, Printer; Ubhayavedanta Sabha, Publisher.
PERIODICALS.					*ii—In the Vernaculars*
ಆರ್ಯಧರ್ಮೋಜ್ಜೀವಿನಿ. Aryadharmôjjîvini, Vol. I, No. 1 ...	Kannada ...	(Editor) A. Mahadeva Sastri.	Religion ...	Mysore ...	Graduates' Trading Association Press, Printer; A. Mahadeva Sastri, Publisher.
					IV—In more than
ಸುಜ್ಞಾನ ಚಂದ್ರಿಕಾ. Sugnâna Chandrikâ, Vol. IV ..	Sanskrit and Kannada.	B. Padmaraja Pandit	Religion ...	Bangalore	Sri Bharati Bhavana Press, Printer; B. Padmaraja Pandit, Publisher.

N. B.—No works of a scientific nature have

OFFICE OF THE REGISTRAR OF AUTHORIZED PUBLICATIONS IN MYSORE,
Bangalore, 31st March 1906.

the provisions of Act XXV of 1867, during the quarter ending 31st March 1906.

Date of issue from the Press or of the publication	Number of sheets, leaves or pages	Size	1st, 2nd, or other number of edition	No of copies of which edition consists	Whether printed or lithographed	Price	Name and residence of proprietor of copy-right or any portion thereof	Date on which copy-right was secured	Remarks
7	8	9	10	11	12	13	14	15	
						Rs. a. p			
13th Feb. 1906.	4+23+1	Dy. 8 vo.	First Edition.	2,020	Prin	Glazed copy 0 2 6 Rough copy 0 2 0	Sivalinga Devaru, Mysore.	31st Mar. 1906.	A puranic story in praise of the Sivaratri festival written in imitation of the well known popular song called the Govu Kathe.
March 1906 ...	1+1+36	Crown 8 vo.	Do	1,000	Do	0 1 6	...	...	Kannada version of the "Parables of our Lord."

Classical Languages—Nil.

one Language.

December 1905.	IV+1+226+1	Dy. 12 mo.	Third Edition (Revised)	500	Printed	1 8 0	...	...	Imaginary conversation in colloquial Kannada between a European traveller and a number of village officers, raiyats and Brahmins followed by a free English translation.
2nd Mar. 1906.	1+1+2+56	Dy. 8 vo.	First Edition.	1,000	Do	1 6 0	Bharathi Sampangi Rama, Hoskote.	31st Mar. 1906.	A Vocabulary of English words and easy sentences in English and Kannada characters with Kannada meanings intended for the use of those who wish to study English without the help of a teacher.
2nd Jan. 1906.	2+86+8	Do	Do	2,000	Do	Free	...	...	Annual Report of the Ubhaya Vedantapravartini Sabha.

spoken in the Province.

December 1905	40	Dy. 8 vo.	First Edition.	1,000	Printed	1 0 0 per annum	A. Mahadeva Sastri. Mysore.	31st Mar. 1906.	A quarterly journal devoted to the collection and publications of such texts from the Hindu Dharma Sastras as are suited to the modern times.

one Language.

22nd Dec. 1905.	7	Dy. 8 vo.	First Edition	500	Printed	0 2 0	...	...	A monthly magazine devoted to the publication of the Jain Puranic works and religious poems in Sanskrit with Kannada translations.

been registered during the quarter

Revised and annotated.
S. G. NARASIMHACHAR. *Kannada Translator. Edn. Dept.*

C. H. YATES,
Registrar of Authorized Publications in Mysore.

OFFICE OF THE COMPILER "MYSORE GAZETTE."

NOTICE.

RATES FOR CIVIL COURT, &c., NOTICES.

Particulars	1st insertion		2nd and subsequent insertion	
	Rs.	a.	Rs.	a
Notices by Civil Courts of Applications for Certificates under Act XXVII of 1860	2	8	1	4
Notices by Civil Courts of Insolvency Application under Section 347 of Civil Procedure Code	5	0	2	8
Insolvency Orders issued by the Civil Courts under Section 354 of the Civil Procedure Code	*Free.*			
Notices issued by Revenue Officers for the grant of duplicate coffee pattas, &c. ... ... per page...	10	0	5	0

RATES FOR PRIVATE ADVERTISEMENTS.

1st insertion As. 8, 2nd insertion As. 6, and 3rd and subsequent insertions As. 4 per line When Postage labels are sent in payment of subscription, etc., one anna extra per rupee should be added.

NOTICE.

No. 1.—The *Mysore Gazette* is published at Bangalore every Thursday. Application for the supply of the Gazette on *Public Service* should be addressed to the Secretary to the Government of Mysore, General and Revenue Department. Postage is not charged for places within the Mysore Province. All subscriptions and advertisement charges are payable *in advance.*

No. 2.—It is hereby notified that, as Government Treasuries in Mysore are authorized to receive and credit Gazette subscriptions as well as publication charges remitted by Courts, all such moneys should be sent to Treasuries and only Treasury receipts forwarded to this office. No money orders will be received by the undersigned except from outside the Province.

Charges of private advertisements must be forwarded to this office.

No. 3.—Much inconvenience is caused in this office by subscribers not giving their full and correct addresses, and writing illegibly on the money order coupons, which are unfit for record.

No. 4.—Communications on post-cards or on paper less than half a sheet of foolscap will not receive attention.

No. 5.—An efficient system of check and counter-check is maintained over the despatching of Gazette copies forwarded through Post. No responsibility will be accepted when copies miscarry, or are not delivered to addressees, and such losses will not be replaced by duplicate copies.

No. 6.—Complaints regarding non-receipt of the Gazette should be forwarded to the undersigned within a week after the date on which it is due.

No. 7.—Copy is sometimes sent to the Press late on Wednesday evenings for publication in the next day's Gazette. This involves considerable inconvenience to the Press and expense to Government. It is therefore notified that all matter intended for publication in Parts II, III and IV should reach this office not later than Tuesday evening; and that for Part I not later than the forenoon of Wednesday, for the following Thursday's issue of the Gazette.

No. 8.—It is requested that Departments will refrain from sending to the Press any matter for publication as extremely urgent later than 12 noon on Tuesdays, when such matter can without inconvenience be held over for the next week's Gazette.

No. 9.—Spare copies of notifications, etc., are often asked for long after their publication when the matter has been broken up, necessitating its resetting, causing inconvenience to the Press and waste of money. It is therefore requested that when spare copies are wanted, a note to that effect, stating the number of copies, be made at foot of such notification, etc.

No. 10.—If no instructions, either at foot of notifications, or separately by docket, accompany any matter, it will be printed in the language in which it is written, and published only once.

C. H. YATES,
Compiler, Mysore Gazette.

MYSORE GOVERNMENT METEOROLOGICAL DEPARTMENT.

Daily Means of Observations for the Week Sunday 8th to Saturday 14th April 1906.

No.	BANGALORE	Sunday 8	Monday 9	Tuesday 10	Wednesday 11	Thursday 12	Friday 13	Saturday 14
1	Barometer red. to 32° F.	26·849	26·865	26·915	26·939	26·913	26·881	26·897
2	Daily Barometric range	·131	·132	·117	·130	·129	·122	·121
3	Mean Dry Temperature in shade	84·1	84·3	85·4	83·5	82·1	84·0	83·6
4	Maximum do	97·9	98·7	[illegible]	96·9	97·9	98·7	96·9
5	Minimum do	71·5	71·3	73·9	71·3	67·5	71·0	71·0
6	Daily range of do	26·4	27·4	23·9	25·6	30·4	27·7	25·9
7	Mean Wet Temperature in shade	67·5	66·5	67·5	65·1	60·8	63·0	64·9
8	Minimum do	64·2	62·3	63·2	62·4	57·2	59·0	59·1
9	Pressure of Aqueous Vapour	·519	·495	·541	·464	·310	·384	·490
10	Humidity	45	44	45	41	28	34	44
11	Wind Vely. in Miles p. day to 8 A. M	144	176	134	152	186	187	177
12	Mean Wind Direction	S b E	S b W	S b W	S S E	S E b S	S	S b E
13	Rainfall in inches to 8 A.M.	0	0	0	0	0	0	0
14	Total Rainfall from 1st January	1·64	1·64	1·64	1·64	1·64	1·64	1·64
15	Per cent of Cloudy Sky	33	0	3	0	0	0	3
16	Character of Weather	Fine passing clouds	Hazy	Dust haze	Dust haze	Dust haze	Dust haze	Dust haze

MYSORE GOVERNMENT METEOROLOGICAL DEPARTMENT.

Daily Means of Observations for the Week Sunday 8th to Saturday 14th April 1906.

No.	MYSORE	Sunday 8	Monday 9	Tuesday 10	Wednesday 11	Thursday 12	Friday 13	Saturday 14
1	Barometer red. to 32° F.	27·330	27·346	27·393	27·412	27·391	27·352	27·370
2	Daily Barometric range	·160	·155	·149	·156	·149	·146	·143
3	Mean Dry Temperature in shade	84·8	84·3	85·4	84·1	84 2	84·4	85·9
4	Maximum do	99·5	98·5	99·2	98·9	98·2	99·7	68·8
5	Minimum do	71·0	70·6	72·2	70·3	70·7	70·0	70·0
6	Daily range of do	28·5	27·9	27·0	28·6	27·5	29·7	28·8
7	Mean Wet Temperature in shade	69·5	69·8	70·1	67·6	66·3	67·1	68·5
8	Minimum do	67·1	68·3	67·5	65·9	64·0	61·8	65·4
9	Pressure of Aqueous Vapour	·566	·538	·589	·519	·479	·518	·553
10	Humidity	49	46	48	46	41	43	49
11	Wind Vely. in Miles p. day to 8 A.M.	221	262	232	183	197	218	213
12	Mean Wind Direction	S b E	S W b S	S W b S	S b E	S b E	S b E	S b E
13	Rainfall in inches to 8 A.M.	0	0	0	0	0	0	0
14	Total Rainfall from 1st January	0·83	0·83	0·83	0·83	0·83	0·83	0·83
15	Per cent of Cloudy Sky	80	3	17	0	0	0	13
16	Character of Weather	Fine	Fine clear	Fine	Fine clear	Fine clear	Fine clear	Fine

MYSORE GOVERNMENT METEOROLOGICAL DEPARTMENT.

Daily Means of Observations for the Week Sunday 8th to Saturday 14th April 1906.

No.	HASSAN	Sunday 8	Monday 9	Tuesday 10	Wednesday 11	Thursday 12	Friday 13	Saturday 14
1	Barometer red. to 32° F.	26·804	26·817	26·860	26·882	26·858	26·813	26·837
2	Daily Barometric range	·133	·120	·109	·137	·128	·119	·125
3	Mean Dry Temperature in shade	81·1	81·2	81·8	81·0	80·8	82·0	81·0
4	Maximum do	97·3	99·2	98·4	96·9	97·4	98·9	98·1
5	Minimum do	69·1	66·1	66·3	66·3	65·9	65·7	66·3
6	Daily range of do	28·2	33·1	32·1	30·6	31·5	33·2	31·8
7	Mean Wet Temperature in shade	70·3	68·6	65·6	66·7	66·1	66·5	67·9
8	Minimum do	65·9	65·1	64·1	65·8	63·9	62·0	65·1
9	Pressure of Aqueous Vapour	·621	·513	·408	·459	·444	·442	·513
10	Humidity	53	42	35	38	38	36	44
11	Wind Vely. in Miles p. day to 8 A.M.	72	75	69	64	62	70	69
12	Mean Wind Direction	S W	N W b N	N N E	S E b S	S E b E	W b S	S E b E
13	Rainfall in inches to 8 A. M.	0	0	0	0	0	0	0
14	Total Rainfall from 1st January	0·03	0·03	0·03	0·03	0·03	0·03	0·03
15	Per cent of Cloudy Sky	50	37	33	7	0	23	17
16	Character of Weather	Fine passing clouds	Fine ; sultry	Sultry	Dust haze ; sultry	Dust haze	Dust haze ; sultry	Fine ; sultry

340

MYSORE GOVERNMENT METEOROLOGICAL DEPARTMENT.

Daily Means of Observations for the Week Sunday 8th to Saturday 14th April 1906.

No.	CHITALDRUG	Sunday 8	Monday 9	Tuesday 10	Wednesday 11	Thursday 12	Friday 13	Saturday 14
1	Barometer red. to 32° F.	27·419	27·430	27·487	27·500	27·471	27·434	27·456
2	Daily Barometric range	·152	·144	·138	·160	·140	·138	·136
3	Mean Dry Temperature in shade	86·6	86·5	88·1	88·1	90·1	86·3	85·7
4	Maximum do	100·3	101·1	101·1	101·4	101·5	102·2	100·1
5	Minimum do	74·4	72·9	75·6	75·6	79·5	71·7	71·9
6	Daily range of do	25·9	28·2	25·5	25·8	22·0	30·5	28·2
7	Mean Wet Temperature in shade	71·2	71·4	67·1	68·8	69·1	69·9	72·6
8	Minimum do	67·5	66·9	63·5	64·9	65·5	63·9	68·3
9	Pressure of Aqueous Vapour	·622	·599	·417	·503	·476	·561	·650
10	Humidity	48	47	31	38	31	41	51
11	Wind Vely. in Miles p. day to 8 A. M	114	153	122	121	122	153	161
12	Mean Wind Direction	S W	S W b S	N N W	S S W	S	S W	S b E
13	Rainfall in inches to 8 A. M.	0	0	0	0	0	0	0
14	Total Rainfall from 1st January	1·24	1·24	1·24	1·24	1·24	1·24	1·24
15	Per cent of Cloudy Sky	20	17	0	10	0	3	10
16	Character of Weather	Fine; sultry	Fine; sultry	Fine clear	Sultry	Sultry	Sultry	Fine; sultry

Dated 20th April 1906.

J. COOK, *Director of Meteorology.*

Abstract Statement of Plague Cases and Deaths in the Mysore Province for the week ending Friday the 20th April 1906.

Place	During the week ending 20th April 1906		During the week ending 13th April 1906		Figures for the corresponding week of last year		Number of infected villages
	Attacks	Deaths	Attacks	Deaths	Attacks	Deaths	
Bangalore City	5	5	7	7	9	5	...
Mysore City	...	...	...	...	1	2	...
Bangalore District	...	...	...	...	13	11	...
Mysore District	3	2	...	...	2	2	1
Kolar District (excluding Gold Fields)	1	2	5	...	4	3	3
Kolar Gold Fields	4	1	1	1	1	...	3
Tumkur District	...	...	...	...	1	2	...
Hassan District	...	...	...	...	...	...	...
Chitaldrug District	...	...	...	...	...	...	1
Kadur District	...	...	...	...	5	5	...
Shimoga District	...	...	...	...	10	7	3
Total ...	13	10	13	8	46	37	11

T. S. NANJAPPA,
for *Offg. Sr. Surgn. & Sany. Comr., M. G.*

342

The Mysore Gazette.

VOL. 41.] PUBLISHED BY AUTHORITY. [No. 17.

BANGALORE, THURSDAY, APRIL 26, 1906.

PART IV.

OFFICIAL PAPERS.

Season Report for the Week ending with the 16th Saturday in 1906 (21*st April* 1906).

District and Station.	Rainfall up to 8 A.M. on Saturday.					Price of food grains in seers per rupee and market fluctuations in prices of food grains.		
	This week.	Last ten years' average for the corresponding week.	Up to the end of the week from 1st January 1906.					
			This year.	Average of past ten years.	Excess (+) or defect (—) of column 4 compared with column 5.			
1	2	3	4	5	6	7		
	I. c.	I. c.	I. c.	I. c.	I. c.		This week.	Past week.	Past ten years' fortnightly average.
							Seers	Seers	Seers
BANGALORE.									
Bangalore C. & M. Station ...	... ...	... ...	.. ..	.. .	.. ..				
" City & Taluk...	.. 6	... 34	1 89	1 66	+ 0 23	Rice, 2nd sort.	7·25	7·50	9·36
Hoskote ...	... 7	... 65	.. 57	1 53	— 0 96				
Dodballapur ...	... ...	... 53	.. 43	1 87	— 1 44	Ragi	17·50	18·50	23·10
Nelamangala ...	... ...	... 53	. 73	1 51	— 0 78	Kulthi	12·25	12·25	...
Kankanhalli ...	.. 27	... 17	... 90	1 17	— 0 27	Kadale	8·00	8·00	10·20
Magadi ...	..	.. 41	.. ...	1 26	— 1 26				
Channapatna ...	... 23	... 52	. 37	1 99	— 1 62				
Anekal ...	.. 17	... 40	2 24	1 66	+ 0 58				
Devanhalli ...	... ...	1 ...	.. 52	1 87	— 1 35				
Closepet ...	.. 67	... 38	... 82	1 23	— 0 41				
District average...	... 15	... 49	. 77	1 58	— 0 81				
KOLAR.									
Kolar ...	... 3	... 31	... 55	1 33	— 0 78				
Bowringpet ...	... 36	.. 28	. 45	1 34	— 0 89	Rice, 2nd sort.	7·25	7·25	9·25
Chintamani ...	... ...	. 1	1 ...	... 72	+ 0 28				
Mulbagal ...	... 39	.. 16	1 99	1 60	+ 0 39	Ragi	15·00	15·00	23·90
Sidlaghatta ...	... ...	... 7	... 36	... 92	— 0 56	Kulthi	15·00	15·00	.
Chikballapur ...	... .	... 50	2 44	2 34	+ 0 10	Kadale	9·00	9·00	9·10
Bagepalli ...	... ...	... 16	1 20	.. 67	+ 0 53				
Goribidnur ...	... ..	... 14	... 60	... 74	— 0 14				
Malur ...	.. 39	.. 33	1 34	1 21	+ 0 13				
Srinivaspur ...	... 79	... 32	1 88	1 58	+ 0 30				
Gudibanda ...	... ...	... 5	... 73	... 73	... ...				
District average...	18	.. 21	1 14	1 20	— 0 6				
TUMKUR.									
Tumkur ...	.. ...	... 25	1 20	1 33	— 0 13				
Maddagiri ...	.. ...	... 25	... 28	.. 83	— 0 55				
Chiknayakanhalli ...	... ...	... 46	1 40	1 19	+ 0 21	Rice, 2nd sort.	7·50	7·50	9·20
Sira ...	... ..	... 35	1 37	... 80	+ 0 57				
Gubbi ...	..	... 31	.. 36	... 93	— 0 57	Ragi	16·00	16·00	26·10
Tiptur ...	... ...	... 54	... 20	1 5	— 0 85	Kulthi	12·00	12·00	...
Pavagada ...	... ...	.. 26	... ..	... 69	— 0 69	Kadale	8·00	8·00	9·35
Kunigal ...	... ...	. 26	. 41	... 59	— 0 15				
Koratagere ...	.. ...	... 29	1 10	.. 82	+ 0 28				
Turuvekere ...	... ...	... 46	... 57	... 90	— 0 33				
District average...	... ...	.. 34	... 69	... 91	— 0 22				

District and Station.	Rainfall up to 8 A. M. on Saturday.										Price of food grains in seers per rupee and market fluctuations in prices of food grains.			
	This week.		Last ten years' average for the corresponding week.		Up to the end of the week from 1st January 1906.									
					This year.		Average of past ten years.		Excess (+) or defect (—) of column 4 compared with column 5.					
1	2		3		4		5		6		7			
	I.	c.	I.	c.	I.	c.	I.	c.	I.	c.		This week.	Past week.	Past ten years' fortnightly average.
												Seers.	Seers.	Seers.
MYSORE.														
Mysore ...	...	...	...	33	2	41	1	19	+1	22				
Chamrajnagar ...	...	5	...	57	...	5	1	81	—1	76				
Seringapatam ...		...	...	47	...	71	1	37	—0	66	Rice, 2nd sort.	8·25	8·25	10·36
Hunsur ...	...	...	...	61	...	12	1	71	—1	59	Ragi	14·00	15·00	21·48
Yedatore ...	...	..	...	65	...	65	1	49	—0	84	Kulthi	13·00	13·00	...
Heggaddevankote ...	..	...	...	58	..	..	5	42	—5	42	Kadale	9·00	9·00	10·24
Gundlupet ...	..	19	...	52	1	63	2	12	—0	49				
Nanjangud ...	...	...	...	35	...	89	1	42	—0	53				
T.-Narsipur ...	...	...	..	63	...	98	1	73	—0	75				
Malvalli ...	...	28	...	57	...	67	1	18	—0	51				
Mandya ...	...	19	...	39	2	9		95	+1	14				
Krishnarajpete ...	...	..	..	52	..	80	1	41	—0	61				
Nagamangala ...	...	..	...	33	1	38	.	86	+0	52				
District average...	..	5	...	50	1	3	1	74	—0	71				
HASSAN.														
Hassan ...	...	.	...	60	...	9	1	68	-1	59				
Manjarabad (Saklespur)	..	...	...	55		84	1	81	—0	97				
Arkalgud ..	...	..	..	62	2	60	1	70	+0	90				
Belur ...	...	..	1	24	1	26	2	27	—1	1	Rice, 2nd sort.	8·50	9·00	10·40
Channarayapatna ...	...	...	...	42	1	10	1	12	—0	2	Ragi	18·00	18·00	24·86
Arsikere ...	...	..	...	25	...	...	1	25	—1	25	Kulthi	12·00	12·00	...
Hole-Narsipur ...	..	..	...	23	1	19	1	63	—0	44	Kadale	9·00	9·50	10·15
Alur ..	...	...	...	57	..	5	1	47	-1	42				
District average...	...	...	...	56	...	89	1	62	—0	73				
SHIMOGA.														
Shimoga ...	...	..	...	76	...	94	1	60	—0	66				
Channagiri ...	...	..	..	31	...	20	..	82	—0	62	Rice, 2nd sort	8·50	8·50	12·24
Honnali ...	...	..	...	50	1	20	1	62	—0	42	Ragi	14·75	14·75	30·37
Shikarpur ...	...	..	...	93	...	...	1	42	—1	42	Kulthi	11·50	11·50	...
Sorab ...	..	...	..	68	..	43	1	13	—0	70				
Sagar ...	...	...	...	72	1	89	1	43	+0	46				
Nagar (Kallurkatte) ..	...	..	...	45	..	56	...	88	—0	32				
Tirthahalli ...	...	...	...	43	1	15	1	44	—0	29				
Kumsi ...	..	...	..	64	...	16	1	51	—1	35				
District average...	...	.	.	60	...	73	1	32	—0	59				
KADUR.														
Chikmagalur ...	..	7	...	89	1	62	2	2	—0	40				
Kadur .	...	...	..	75	...	...	1	39	—1	39	Rice, 2nd sort	7·50	7·50	10·60
Tarikere ...	...	...	1	2	...	76	1	67	—0	91	Ragi	15·00	15·00	23·60
Koppa .	...	...	..	76	2	69	1	84	+0	85	Kulthi	11·00	11·00	...
Mudgere ...	...	...	1	26	..	65	2	58	—1	93	Kadale	8·00	8·00	9·90
Yedahalli ...	...	...	1	20	...	40	2	20	—1	80				
Sringeri ..	..	...	1	2	1	3	2	9	—1	6				
District average .	...	1	.	99	1	2	1	97	—0	95				
CHITALDRUG.														
Chitaldrug .	...	..	...	32	1	22	...	71	+0	51				
Challakere ...	..	..		40	...	8	..	99	—0	91	Rice, 2nd sort	7·50	7·50	10·60
Hiriyur ..	..	.	...	38	...	11	.	73	—0	62	Ragi	14·00	16·00	27·60
Holalkere ...	..	..	.	72	...	20	1	75	—1	55	Kulthi	11·00	13·00	...
Davangere ...	...	...	..	44	...	41	..	95	—0	54	Cholum	12·00	15·00	24·30
Molakalmuru ...	...	..	...	10	...	24	...	32	—0	8	Kadale	8·00	9·00	10·60
Jagalur ...	..	..	...	52	...	27	1	21	—0	94				
Hosdurga ...	...	...	.	13	...	10	..	57	—0	47				
Harihar ...	...	...	..	23	2	94	...	64	+2	30				
District average...	..	...	...	36	...	62	...	87	—0	25				
Provincial average...	...	5	...	57	..	86	1	40	—0	54				

Note—Rice (husked)—Oryza Sativa.
Ragi—Eleusine Corocana.
Kulthi—(Horse gram) Dolichos Biflorus.
Cholum—Sorghum Vulgare.
Kadale—(Bengal gram) Cicer Arietinum.

344

DISTRICT REPORTS.

8. Markets how supplied.
9. Progress of agricultural operations, state of standing crops, prospects and probable outturn of harvests, serious damage done to crops by insects or other natural calamities.
10. Prospects of season, tracts in which the rainfall has been insufficient, areas affected by scarcity, number of people under relief, and state of food stocks.
11. Public health.
12. Remarks as to the condition of agricultural stock, failure of pasturage, of fodder, etc.

BANGALORE CIVIL AND MILITARY STATION.

		Normal.	*Current.*	
Prices of food grains—	Rice	... 10 to 11	6½ to 7	seers per rupee.
	Ragi	.. 25 to 30	16 to 17	

Manure is being collected.
Cattle are in good condition.
Water and fodder sufficient.

BANGALORE CITY AND TALUKS.

8. Market well supplied. Prices steady.

9. Standing crops are in good condition. Sugar-cane is being harvested and resown. Sugar-cane harvest is reported to be good throughout.

10. Prospects of the season not very promising. Rain is badly wanted throughout.

11. Public health generally good.

12. Cattle healthy. Foot and mouth disease is disappearing in Hoskote. Water and fodder are available.

KOLAR.

8. Market well supplied.

9. Sugar-cane is being planted in Bowringpet, Chintamani, Sidlaghatta, Chikballapur, Goribidnur, Gudibanda, and mulberry in Chintamani. Vysakhi paddy is being sown in Goribidnur under wells and channels. Sugar-cane is also being milled in Kolar, Chintamani, Mulbagal, Sidlaghatta and Bagepalli. Paddy is being harvested in Kolar, Sidlaghatta, Bagepalli and Gudibanda; and cholum in Bagepalli.

10. Prospects of the season depend upon early rains. Food stocks are available.

11. Public health generally good.

12. Water and fodder generally available, but the supply of water is running short, and wells in beds of tanks are sunk to meet the demand. Pasture in fields and grazing lands is almost exhausted.

TUMKUR.

8. Market well supplied.

9. Paddy in Maddagiri, Sira, Pavagada and Koratagere; sugar-cane in Maddagiri and Gubbi; cholum in Sira, Pavagada and Koratagere; cotton in Sira and kadale in Gubbi are being harvested. Paddy and sugar-cane are sown in Maddagiri; standing crops in Tumkur, Chiknayakanhalli, Gubbi, Tiptur and Koratagere are withering. In other taluks they are in fair condition. The following is the estimated outturn of crops:—

Maddagiri—Paddy 8 annas and sugar-cane 6 annas.
Sira—Paddy 4 to 8 annas, cholum 2 to 4 annas and cotton 1 to 2 annas.
Gubbi—Sugar-cane and kadale 4 annas.
Pavagada—Paddy 2 annas, cholum 4 annas and castor 1 anna.
Koratagere—Paddy 8 annas and cholum 4 annas.

10. Prospects of the season not encouraging. Food stocks are available for the present. Supply of water in wells is diminishing in several parts of the district. Mungar rains are anxiously awaited.

11. Public health generally good, except that small-pox prevails in parts of Gubbi, Tiptur and Turuvekere.

12. Cattle healthy, except that foot and mouth disease is prevalent in parts of Gubbi, Tiptur and Turuvekere. In parts of Sira, Tiptur and Turuvekere date leaves are used as fodder for cattle. Water is drawn from wells in most parts of the district for cattle to drink.

MYSORE.

8. Market fairly well supplied.

9. Standing sugar-cane, mulberry and cotton crops are reported to be fair in parts of Seringapatam, Nanjangud, T.-Narsipur and Malvalli; and good in parts of Chamrajnagar, Krishnarajpete and Nagamangala. Cholum sown in some parts of Mysore is reported to be withering. Cholum is reported to have been sown in parts of Malvalli and Nanjangud, where scanty rain is said to have fallen. It is also reported that black and green grams were sown in parts of Krishnarajpete Taluk. In all other taluks no seeds have been sown and raiyats are anxiously waiting for rain.

10. Prospects of the season indifferent. The rainfall during the week is very scanty and confined only to a few taluks. Food stocks are sufficient for the present.

11. Public health generally good. Small-pox still prevails in Heggaddevankote.

12. Cattle healthy in almost all the taluks. In Chamrajnagar, Malvalli and Heggaddevankote they are reported to be suffering from foot and mouth disease. Water and fodder are both getting scarce in many taluks.

HASSAN.

8. Market fairly well supplied. Prices high.

9. Sugar-cane in Hassan, Belur, Hole-Narsipur, Arkalgud and Alur, and paddy in Hassan and Manjarabad are reported to be in a fair condition. Sugar-cane and paddy in Arsikere are reported to be withering for want of rain. The outturn of sugar-cane in Hole-Narsipur is estimated at 8 annas.

10. Prospects of the season fair. Food stocks sufficient for the present. Rain is wanted in all parts.

11. Public health generally good. Small-pox is reported to be prevalent in several parts of the district.

12. Cattle generally healthy, but foot and mouth disease is reported to exist in parts of Manjarabad, Belur, Arsikere and Channarayapatna. Fodder and water generally available, except in parts of Arsikere and Channarayapatna, where some difficulty is felt.

SHIMOGA.

8. Market well supplied. Prices high.

9. Vysakhi paddy in Channagiri, Sagar and Nagar and sugar-cane in Sagar and Nagar are in a fair condition in areas where water is available. Water pits are dug in parts of Shimoga to obtain water for preserving the sugar-cane plants.

10. A shower of rain has fallen in the Anantapur hobli of the Sagar Taluk. In other localities no rain has yet fallen. Food stocks are enough for the present, except in parts of Channagiri, Shikarpur, Sorab and Kumsi.

11. Public health is generally good. Small-pox prevails in some localities in Sagar, Shimoga and Channagiri.

12. Cattle healthy. Fodder supply is running short in Channagiri, Honnali, Shikarpur, Sorab and Kumsi. Scarcity of water is being felt in all taluks.

KADUR.

8. Market fairly well supplied.

9. Sugar-cane is being planted in parts of Tarikere and Koppa. The standing crops, *viz.*, sugar-cane in parts of Tarikere and Yedahalli, and *kar* paddy and sugar-cane in parts of Kadur are in fairly good conditon; but they are reported to be not flourishing in parts of Chikmagalur for want of water. Sugar-cane in parts of Kadur is being harvested. Ploughing and other agricultural operations are delayed for want of rain.

10. Prospects of the season fair, but rain is needed for standing crops. Food stocks are available and sufficient for the present.

11. Public health generally good, except that small-pox prevails in parts of Chikmagalur, Mudgere, Koppa and Yedahalli.

12. Foot and mouth disease to cattle is reported to be subsiding, except in parts of Chikmagalur, Kadur and Mudgere, where, however, no mortality is reported. Water and fodder generally available except in parts of Chikmagalur, Tarikere, Kadur and Yedahalli, where water-supply is scanty.

CHITALDRUG.

8. Market well supplied.

9. Standing crops, *viz.*, paddy, sugar-cane under kapile wells in Challakere, Hiriyur, Holalkere and Davangere, and tobacco and navane in Molakalmuru are reported to be in fair condition. The outturn of crops harvested during the week is as follows :—

Chitaldrug—Sugar-cane 8 annas.
Hiriyur—Wheat, kadale, ragi and cholum 2 annas; cotton, ballar, navane and dhall 4 annas and ragi under kapile wells 8 to 10 annas.
Davangere—Sugar-cane 4 to 8 annas.
Molakalmuru—Garlic 2 annas, and navane and onion 4 annas.
Hosdurga—Paddy 8 annas

10. Prospects of the season fair. Food stocks available.

11. Public health generally good.

12. Cattle healthy. Water and fodder procurable in limited quantities.

BANGALORE,
25th April 1906.

B. K. VENKATA VARADA IYENGAR,
Secy. to the Govt. of H. H. the Maharaja of Mysore,
Gen. & Rev. Dept.

Proceedings of the Government of His Highness the Maharaja of Mysore.

Read—

Memo No. 2170, dated the 4th April 1906, from the First Assistant to the Hon'ble the Resident in Mysore, forwarding copy of Government of India Home Department Resolution No. 209—228, dated the 9th March 1906, regarding the establishment of an Institute at Dehra Dun.

Resolution.

Read—

Despatch to the Secretary of State, No. 110 (Financial), dated the 30th March 1905.

Extract paragraph 2 of a Military despatch from the Secretary of State, No. 69, dated the 16th June 1905.

The Government of India have decided, with the approval of the Secretary of State, to establish an Institute in India as a centre for the practical instruction of medical officers and subordinates in the use and management of X-ray apparatus, and as a depot for the storage and repair of such apparatus.

2. The Institute will be located at Dehra Dun and will be under the superintendence of an Officer of the Indian Medical Service, who will receive the pay of his rank and the staff pay sanctioned for a medical store-keeper and will be provided with the necessary subordinate establishment to assist him in his duties.

3. Classes will be held for the instruction of Medical Officers and subordinates in Civil and Military employment, the course of instruction in each case extending over a period of three months. Officers in Military employ attending the classes will receive the pay and allowances of their substantive appointments and travelling allowance under the rules which govern their case. Officers in Civil employ permitted to attend will draw the pay of their substantive appointment and travelling allowance at the rates permissible under the Civil Service Regulations.

4. The Government of India trust that local Governments will afford all reasonable facilities to Medical Officers and subordinates serving under their jurisdiction, who may be desirous of acquiring a practical knowledge of the X-ray apparatus and in whose case the possession of such knowledge would be of advantage, to enable them to proceed to Dehra Dun for instruction at one of the classes. Applications for permission to attend the Institute should be made to the local administrative Medical Officer in each Province who should submit his recommendations after obtaining the approval of the local Government in each case, to the Director-General, Indian Medical Service.

ORDER.—Ordered that a copy of this resolution be communicated to all local Governments and Administrations, to all Departments of the Government of India, to the Director-General, Indian Medical Service, and to the Sanitary Commissioner with the Government of India for information.

Ordered also that a copy be published in the Supplement to the *Gazette of India* for information.

No. 10894-5—MED. (236-05)-2, DATED BANGALORE, 23RD APRIL 1906.

ORDER THEREON.—Ordered that a copy of the above be forwarded to the Senior Surgeon and Sanitary Commissioner and published in the Gazette for general information.

B. K. VENKATA VARADA IYENGAR,
Secy. to Govt., Gen. & Rev. Dept.

The Mysore Gazette.

Vol. 41.] PUBLISHED BY AUTHORITY. [No. 18.

BANGALORE, THURSDAY, MAY 3, 1906.

☞ Separate paging is given to the Parts in order that they may be filed as distinct compilations.

CONTENTS.

PART I —Notifications by the Government of His Highness the Maharaja of Mysore.

PART II.—Notifications by the Government of India; The Hon'ble the Resident in Mysore; Chief Judge; Survey and Inam Superintendent; Comptroller; Chief Engineer; Mysore State Railway; Amrut Mahal Department; Inspector-General of Registration; Senior Surgeon; District and Sessions Judges; Sub-Judges; Deputy Commissioners of Districts; Forest Officers; Presidents, Bangalore and Mysore City Municipalities; Season Reports; Mortuary and Meteorological Statements; Postal Notices; Civil and Military Station Notifications, &c.

PART III.—Legislative Measures and Rules thereunder.

PART IV.—Official Papers.

PART I.

Notifications by the Government of His Highness the Maharaja of Mysore.

GENERAL AND REVENUE.

No. 11148—*San.* (7-05)-146, *dated* 26*th April* 1906.

It is hereby notified for general information that attendance of persons from infected areas at the fairs and festivals noted below, has been prohibited by the Madras Government :—

Name of jatra	Place	Taluk	District	Date		Authority
				From	To	
* Sri Lakshmi Narasimhaswami festival and cattle fair.	Parikkal and villages round it.	Tirukkoyilur ...	South Arcot ...	The 3rd to 14th May 1906, inclusive.		Endorsement No. 463 P., dated 19th April 1906, from the First Assistant to the Hon'ble the Resident in Mysore.
Car festival ...	Avanashi ...	Palladam ...	Coimbatore ...	The 4th to 10th May 1906.		Do No. 465 P., do
† Manikka Varadarajaswami festival and cattle fair.	Punganur ...	Punganur Division.	North Arcot ...	The 1st to 12th May 1906.		Do No. 501 P., dated 21st April 1906, from the First Asst. to the Hon'ble the Resident in Mysore.

* The holding of the cattle fair is also prohibited at Parikkal or in any of the villages within a radius of 5 miles from it.

† Do do do from the 12th to the 22nd May 1906.

No. 11199—*San.* (213-05)-2, *dated* 27*th April* 1906.

The following notification of the Madras Government, received with endorsement No. 499 P., dated the 21st April 1906, from the 1st Assistant to the Hon'ble the Resident in Mysore, is republished for general information :—

No. 627.—Whereas the Governor in Council is satisfied that there is danger of an outbreak of plague at Madura in the Madura Taluk of the Madura District, if the ensuing Agricultural and Industrial Exhibition and Cattle Show are permitted to be held without restriction at that place :—

In exercise of the powers delegated to him under the Epidemic Diseases Act, 1897, the Governor in Council prohibits the attendance at the said Exhibition and Show from the 3rd to the 10th of May 1906, of persons from districts other than Madura, Tinnevelly, Trichinopoly and Tanjore. All persons proceeding to the said Exhibition and Show in contravention of this notification will be turned back.

The Governor in Council further directs that between the 1st and 10th May 1906, cattle and other live stock intended or believed to be intended to be exhibited at the said Show shall not be booked from other districts than those mentioned above for the stations of Vadipatti, Sholavandan, Samayanallur, Madura, Tirupparankundram, Tirumangalam and Kallikudi on the South Indian Railway and for the stations of Madura East, Silaiman and Tiruppuvanam on the Madura-Pamban Railway.

No. 11235—*San.* (7-05)-147, *dated* 30*th April* 1906.

It is hereby notified for general information that attendance of persons from infected areas at the festival noted below, has been prohibited by the Madras Government :—

Name of jatra—Tiruppur car festival. Place—Tiruppur. Taluk—Palladam. District—Coimbatore.	Dated—From 18th to 22nd May 1906. Authority—First Assistant Resident's Endorsement No. 467 P., dated the 19th April 1906.

All persons proceeding to the said festival in contravention of this notification will be turned back.

No. 11236—*San.* (7-05)-148, *dated* 30*th April* 1906.

The following notification of the Madras Government received with the First Assistant Resident's Endorsement No. 469, dated the 19th April 1906, is republished for general information :—

Whereas the Governor in Council is satisfied that there is danger of an outbreak of plague at Conjeevaram in the Conjeevaram Taluk of the Chinglepet District, if persons from the Districts of Salem, Coimbatore, North Arcot, Bellary, South Arcot and Malabar, the Madras City, the Mysore State and other parts declared to be infected with plague are permitted to visit that place on the occasion of the ensuing Brahmotsavam festival of Sri Devarajaswami.

In exercise of the powers delegated to him under the Epidemic Diseases Act, 1897, the Governor in Council prohibits the attendance at the said festival from the 26th May to the 18th June 1906, inclusive, of persons from the said parts, and further directs that between the said dates no tickets to travel by railway shall be sold within the Bellary District, and at the stations of Tellicherry, Karaimadai, Mettupalaiyam, Madras, Madras Beach, Royapuram, Washermanpet, Vyasarpadi, Perambur, Villivakkam, Ambathur, Korukkupettai, Tondiarpett and Tiruvottiyur on the Madras Railway and of Madras Beach, Madras Fort, Madras Park, Egmore, Chetput, Kodambakkam, Saidapet, St. Thomas Mount, Pallavaram, Chittur, Tandarai, Tiruvannamalai and Agaram Sibbandi on the South Indian Railway to any person intending or believed to be intending to be present.

All persons proceeding to the said festival in contravention of this notification will be turned back.

No. 11033—*L. B.* (89-05)-8, *dated* 25—27*th April* 1906.

For Mr. Nirgundada Narasingappa, appointed in Government Notification No. 9209—L. B. 89-05-6, dated the 3rd March 1906, as a member of the Bagur Union in the Hosdurga Taluk, *vice* Mr. Nirgundada Subbanna, who resigned his membership, read Mr. Nirgundada Narayanappa.

No. 11130—*L. B.* (288-05)-4, *dated* 26—27*th April* 1906.

In accordance with Government Proceedings No. J. 2755-65—Regis. 7-8, dated the 29th March 1905, raising the strength of the taluk board members from twelve to fifteen, the following additional members are appointed for the several taluk boards in the Tumkur District :—

TUMKUR.

Ex-officio Member.

The Sub-Registrar.

Non-official Members under clause (h).

1. Mr. Venkatakrishnaiya, Land-holder.
2. „ Seenappa, Land-holder and Shanbhog.

MADDAGIRI.

Ex-officio Member.

The Sub-Registrar.

Non-official Members under clause (h).

1. Mr. Narasappa, Sahukar.
2. „ Chikka Malle Gowda, Patel and Land-holder.

SIRA.

Ex-officio Member.

The Sub-Registrar.

Non-official Members under clause (h).

1. Mr. Sahukar Uggre Gowda.
2. „ Putnaikanhalli Mariyappa, Sahukar.

PAVAGADA.

Ex-officio Member.

The Taluk Sheristadar (Sub-Registrar).

Non-official Members under clause (h).

1. Mr. Venkappa of Gujjanadu.
2. „ Shanbhog Venkoba Rao of Sulnaikanhalli.

TIPTUR.

Ex-officio Member.

The Sub-Registrar.

Non-official Members under clause (h).

1. Mr. G. Nanjundayya, Merchant.
2. „ A. Chikkanna Setty, Merchant.

GUBBI.

Ex-officio Member.

The Sub-Registrar.

Non-official Members under clause (h).

1. Mr. Gubbi Shamboolingasetty, Land-holder.
2. „ Hullekere Naranappa, Land-holder and Shanbhog.

CHIKNAYAKANHALLI.

Ex-officio Member.

The Sub-Registrar.

Non-official Members under clause (h).

1. Mr. Thimmaraya Gowda, Patel of Bellavi.
2. „ Seegebagimalla Setty.

KUNIGAL.

Ex-officio Member.

The Sub-Registrar.

Non-official Members under clause (h).

1. Mr. G. Sreenivasaiengar, Land-holder.
2. „ Venkataramanareddi, Patel and Land-holder.

KORATAGERE.

Non-official Members under clause (h).

1. Mr. Pujari Thimmaiya.
2. „ Manuvinkurki Rudrappa Setty.
3. „ Bada Hussen Saib, Cloth Merchant and Land-holder.

TURUVEKERE.

Non-official Members under clause (h).

1. Mr. Turuvekere Hyath Saib.
2. „ Thandergadu Puttannah.
3. „ Shettra Veera Chetty, Merchant and Land-holder.

2. The following appointments are made to fill up the existing vacancies on the several Taluk Boards in the Tumkur District:—

Name of member appointed.	In place of member.
TUMKUR.	
Under clause (f).	
Mr. Nettikere Ranganna (elected)... ...	Mr. Venkataramayya (deceased).
Under clause (h).	
Mr. Venkatasubbaiya	Mr. P. Mahadevayya (appointed Munsiff).
SIRA.	
Under clause (g).	
Mr. Venkatesayya (elected)	Mr. Narayanaiengar, Sub-Registrar, appointed *ex-officio* member.
TIPTUR.	
Under clause (f).	
Mr. Puttu Rudra Setty, Merchant (elected) ...	Mr. Narasimhachar of Tarikere (deceased).
Under clause (h).	
Mr. B. Desikachar	Mr. Chikkanna Setty of Nonavinkere (deceased).

No. 11239—*Ml.* (534-05)-2, *dated* 28*th April*—1*st May* 1906.

Mr. Bale Chikbasavanna is appointed a member of the Yedatore Municipal Board, *vice* Mr. Yedur Setti, deceased.

No. G. 5348 *G. M.* 45-05-11, *dated* 28—30*th April* 1906.

The following specification of an invention has been filed in accordance with Sections 8, 9, 10 and 11 of Regulation XI of 1894 (The Inventions and Designs Regulations) and is open to inspection at the office of the Dewan of Mysore on application to the Secretary to the Government of Mysore, General and Revenue Department, and on payment of a fee of one rupee.

By Mr. Charles Frederick Strauss of Railway Hotel, Kalgoorlie, in the State of Western Australia, Mine Manager.

"An improved Lever gripper and attachments for ore feeders and the like."

No. R. 13350 - *L. R.* 609-05-3, *dated* 16*th April* 1906.

Under Section 6 of the Land Acquisition Regulation, No. VII of 1894, it is hereby declared that the lands described hereunder are required for a public purpose, *viz.*, for forming a new village, Hiranyapalli in the Chintamani Taluk, Kolar District; and under Sections 7 and 3 (*c*) of the said Regulation, the Assistant Commissioner in charge of Chintamani group of taluks is authorized to take order for the acquisition of the said lands :—

District	Taluk	Hobli	Village	Name of khatedar	Survey No.	Dry, wet or garden	Total extent	Assessment	Extent now required		Boundaries			
									Extent	Assessment	East	West	North	South
							A. G.	Rs. a. p.	A. G.	Rs. a. p.				
Kolar	Chintamani	Chintamani	Hiranyapalli	Chikkanaga ...	88	Dry ..	2 28	4 12 0	2 28	4 12 0	Bachanna's field	Kuruba Kempa's field	Survey No. 89, Honnurappa	Kolar Muniappa's field.
				Honnurappa ...	2 89	Dry ...	3 21	7 0 0	3 21	7 0 0	Do ...	Chintamani Munia's field	Tope ...	Chikkanaga.

No. R. 13584—*L. R.* 612-05-3, *dated* 20*th*—21*st April* 1906.

Under Section 6 of the Land Acquisition Regulation, No. VII of 1894, it is hereby declared that the land described hereunder is required for a public purpose, *viz.*, for opening a cart-track; and under Sections 7 and 3 (*c*) of the said Regulation, the Assistant Commissioner in charge of Honnali group of taluks is authorized to take order for the acquisition of the said land :—

District—Shimoga.
Taluk—Channagiri.
Village—Pandavamatti.
Name of khatedar—Karibasaiya and Marala Siddaiya.
Survey No.—106—1.
Total extent—11 acres and 35 guntas.
Assessment—Rs. 13.
Extent now required—275 yds. length and 5 yds. breadth.

Boundaries—
East—Portion of S. No. 107 and a path leading from Pandavamatti to Rajagondanahalli.
West—S. Nos. 101 and 102.
North—Path leading from Pandavamatti to Rajagondanahalli.
South—Portions of S. Nos. 100 and 107.

No. R. 13987—*L. R.* 434-05-6, *dated* 27—28*th April* 1906.

In supersession of Notification No. R. 9887—L. R. 434-05-3, dated the 23rd January 1906, published on page 64 of Part I of the *Mysore Gazette*, dated the 1st February 1906, and under Section6 of the Land Acquisition Regulation, No. VII of 1894, it is hereby declared that the land hereunder mentioned is required for a public purpose, *viz.*, for improving the Honnali-Basavapatna road; and under Sections 7 and 3 (*c*) of the aforesaid Regulation, the Assistant Commissioner in charge of the Honnali group of taluks is authorized to take order for the acquisition of the said land :—

District—Shimoga.
Taluk—Channagiri.
Hobli—Basavapatna.
Village—Sringarabag.
Name of Khatedar—Siddalinga, son of Bharamajja.
Survey No.—61, Part 3.
Particulars—Dry.
Total extent—39 guntas.
Assessment—Re. 0-14-0.
Extent required—39 guntas.

Boundadries—
East—Land belonging to Ranga.
West—Old road leading to Honnali.
North—Village site.
South—Lane connecting the road leading from Hosakere to Honnali.

No. R. 13997—*L. S.* 65-05-3, *dated* 28—30*th April* 1906.

Under Section 236 of the Mysore Land Revenue Code, the Government of His Highness the Maharaja of Mysore are pleased to authorize the extension of the provisions of Chapters VIII to X of the above said Code to the Inam villages of Kodiyala, Karenahalli and Seshagirihalli in the Closepet Sub-Taluk, endowed to the Sri Vyasarayaswami Matt.

No. 11289—*L. B.* (445-05)-3, *dated* 1*st May* 1906.

Under Section 6 of the Land Acquisition Regulation, VII of 1894, the undermentioned land in the Kodur village, Malur Taluk, is required for public purposes, *viz.*, for opening a road; and under clause (*c*) of Section 7, the Assistant Commissioner, Malur Division, is authorized to take order for the acquisition of the land in question :—

District—Kolar.
Taluk—Malur.
Hobli—Lakkur.
Village—Kodur.
Name of the owner—Munikempanna.
Survey or other number—House site No. 5.
Extent—5 × 10=50 Sq. yds.
Assessment—Nil.
Extent required—5 × 10=50 Sq. yds.

Boundaries—
East—Road.
West—Palliga Venkata's house.
North—Local Fund well.
South—Government site.

CIVIL APPOINTMENTS.

Heads of Departments and all other officers concerned are informed that Notifications in the Gazette are in future to be accepted as disposing of all references regarding leave, transfers, appointments, powers and other personal questions affecting Gazetted officers, as to which orders are gazetted by the Government in this Part of the Gazette, and that any subsidiary orders as to relief of their subordinates and the like, which such notifications necessitate, must be issued by them on receipt of the Gazette, as no other orders will be issued by Government.

No. 11056—*Med.* (249-05)-2, *dated* 25—26*th April* 1906.

Mr. N. Rangachar, Sub-Assistant Surgeon, was, under Article 188 of the Mysore Service Regulations, granted ten days' privilege leave from the afternoon of the 16th February 1906.

No. 11140—*Med.* (55-05)-11, *dated* 27*th April* 1906.

Under Article 188 of the Mysore Service Regulations, Mr. P. S Achyuta Rao, Civil Surgeon and District Medical and Sanitary Officer, Mysore District, is granted privilege leave of absence for twenty-five days, with effect from the date of availment.

2. Mr. G. Asirvatham, Sub-Assistant Surgeon, will act as the District Medical and Sanitary Officer of the Mysore District and Superintendent of the Mysore Jail during Mr. Achyuta Rao's absence on leave.

3. Mr. Jagannath Pille will be in charge of the Plague duties.

No. J. 3035—*Police* 107-18, *dated* 27—28*th April* 1906.

Mr. I. E. David, Acting Superintendent of Police of the Kolar Gold Fields, was granted furlough on medical certificate from the 7th January 1906 to the 18th February 1906.

No. J. 3038—*Police* 107-19, *dated* 27—28*th April* 1906.

Mr. I. E. David, Acting Superintendent of Police of the Kolar Gold Fields, is granted three days' privilege leave of absence combined with furlough on medical certificate for one year, with effect from the afternoon of the 26th March 1906.

No. Fl. 7107—*Gl. Fin.* 78-05-21, *dated* 27*th April* 1906.

Mr. Nritya Gopal Basu, M.A., Rai Bahadur, Comptroller to the Government of His Highness the Maharaja of Mysore, is granted privilege leave for a fortnight from the 30th April 1906. During his absence on leave Mr. T. Satyaraja Chetty, Assistant Comptroller, will be in charge of the current work of the office of the Comptroller.

No. R. 13957—*L. R.* 453-05-4, *dated* 27—28*th April* 1906.

The fifteen days' privilege leave granted to Mr. T. Ananda Rao, Revenue Commissioner, in Notification No. 9571—L. R. 453-05-2, dated the 13th January 1906, not having been availed of by him, is hereby cancelled.

No. R. 13958—*L. R.* 608-05-5, *dated* 27—28*th April* 1906.

Under Article 188 of the Mysore Service Regulations, Mr. B. Kesar Singh, Amildar of Pavagada, is granted privilege leave of absence for one month and fifteen days, with effect rom the 15th March 1906.

No. R. 14031—*L. R.* 62-05-6, *dated* 30*th April* 1906.

Under Article 220 of the Mysore Service Regulations, Mr. A. Krishne Urs, Amildar of the Gundlupet Taluk, was granted furlough for thirteen days, with effect from the 5th December 1905.

No. R. 14063—*L. R.* 646-05-2, *dated* 1*st May* 1906.

Under Article 188 of the Mysore Service Regulations, Mr. V. Krishna Rao, Acting Extra Assistant Commissioner, Kadur District, is granted two weeks' privilege leave of absence with effect from the 2nd May 1906, or the subsequent date from which he may avail himself of it.

No. R. 14089—*L. R.* 621-05-3, *dated 1st May* 1906.

Under Article 188 of the Mysore Service Regulations, Mr. Syed Yacoob, Amildar of the Challakere Taluk, is granted privilege leave of absence for fifteen days, from the date of availment.

2. Subbiah, Taluk Sheristadar, will be in charge of the taluk during the absence of Mr. Syed Yacoob.

No. R. 14126—*L. R.* 657-05-2, *dated 2nd May* 1906.

Under Article 188 of the Mysore Service Regulations, Mr. B. J. Kumarasami Naik, B.A., Assistant Commissioner, Chitaldrug District, is granted privilege leave of absence for fifteen days, with effect from the 5th May 1906 or date of availment.

2. During the above period, the Treasury Assistant Commissioner of the District will, in addition to his own duties, look after the current work of Mr. Kumarasami Naik's office.

No. R. 13907—*L. R.* 430-05-7, *dated 26th April* 1906.

In modification of para 2 of Notification No. R. 13463—L. R. 430-05-6 of the 19th April 1906, Mr. T. K. Sundararaj Iyengar, Officiating Extra Assistant Commissioner, is transferred from the Kolar District to the Hassan District for the charge of the District Treasury there, during the absence on three months' privilege leave of Mr. M. A. Narayan Iyengar.

No. R. 14106—*L. R.* 42-05-8, *dated 2nd May* 1906.

In modification of Notification No. 13907—L. R. 430-05-7 of the 26th April 1906, Mr. T. K. Sundararaj Iyengar, Officiating Extra Assistant Commissioner, is transferred to the Chitaldrug District, for the charge of the Davangere group of taluks.

2. Mr. T. Dharmaraj Chetty, Amildar of Devanhalli, is appointed to act as Extra Assistant Commissioner, during the absence on three months' privilege leave of Mr. M. A. Narayan Iyengar, Assistant Commissioner, in charge of the District Treasury at Hassan.

No. R. 14033—*L. R.* 21-05-151, *dated 30th April* 1906.

Mr. T. Ananda Rao, B.A., handed over, and Mr. A. Rangasami Iyengar, B.A., B.L., assumed, charge of the office of the Revenue Commissioner, on the afternoon of the 26th April 1906.

The Petition Box kept at the Office of the General and Revenue Secretariat, Bangalore, will be cleared at 12 noon every day by the Secretary to Government, General and Revenue Department, and in his absence from Bangalore, by the Deputy Secretary.

By Order,
B. K. VENKATA VARADA IYENGAR,
Secy. to Govt., Gen. & Rev. Dept.

PUBLIC WORKS.

No. 404—2705, *dated 26th April* 1906.

The privilege leave of absence for one month and five days granted to Mr. N. Anandalwar, B.A., L.C.E., Sub-Assistant Engineer, attached to the Mysore Palace Division, in this office Notification No. 202—1429, dated 3rd March 1906, is hereby extended by another month.

By Order,
BERNARD DAWES, *Lieut., R. E.*,
for *Secy. to Govt., P. W. Dept.*

The Mysore Gazette.

Vol. 41.] PUBLISHED BY AUTHORITY. [No. 18.

BANGALORE, THURSDAY, MAY 3, 1906.

PART II.

Notifications by Govt. of India, Resident, Chief Court, &c.

JUDICIAL DEPARTMENT.

IN THE CHIEF COURT OF MYSORE.

CIVIL SIDE.

Addendum dated 16th April 1906 to the form of monthly statement of cases disposed of prescribed by circular letter No. 161, dated 20th August 1904.

The Chief Court directs that in the said statement the following additional column (13) shall be opened, with the heading "Information regarding Processes" with the following sub-heads :—

(*a*) Number of processes issued to the Nazarat at the station.

(*a*1) Amount of fees on do

(*b*) Number of processes issued to outlying Nazarats.

(*b*1) Amount of fees on do

(*c*) Number of other processes issued.

(*c*1) Amount of fees on do

Addendum et Corrigendum, dated 14th April 1906 to the Process Rules issued with notification dated 25th January 1905.

The Chief Court directs that in item 6 of Rule XXV the words "movable or" be deleted and the words "property in cases exceeding Rs. 50 in value" inserted after "immovable" that the following be inserted as items 7 and 8 :—

		Rs.	a.	p.
7.	Do in cases not exceeding Rs. 50 in value	0	8	0
8.	Warrant of sale of movable property	0	8	0

and that the present items 7 and 8 be altered as 9 and 10.

Addendum et Corrigendum, dated 16th April 1905 to the Process Rules issued with notification dated 25th January 1905.

The Chief Court directs that in the form of Process Register A prescribed by the said Rules the following additional columns be opened after column 13 :—

14 Amount of fees on processes issued to the Nazarat at the station.

15 Amount of fees on processes issued to outlying Nazarats.

16 Amount of fees on other processes issued,

and that the column of remarks be numbered as 17

and that the following note be inserted at foot of the forms of Process Register A and Process Register B:—

NOTE.—Processes to be served through Departments are not intended to be forwarded to the Nazarat or entered in the B. Register. They should be entered in Register A only under column 16 and sent direct from Courts and the receipts should not also be credited to the Nazarat.

Addendum et Corrigendum, dated 25th April 1906, to Rule of Practice No. 127, dated 30th October 1905.

The Chief Court directs that in para 2 of the said Rule the words "if not disbursed to the decree holder on the same day" be deleted, that in para 3 for the words "but in the Register of Deposits No. XI" the words "but they shall be entered in the Register of Deposits (No. XI) and in the ledger (No. XII) or in the Register of stamp duties and penalties (No. XIII) as the case may be" and that in para 6 between the words "The Head Munshi of every Munsiff's Court" and "shall furnish the like security to the extent of Rs. 250, etc.," the words "and the Assistant Nazir of every District Court" be inserted.

Addendum et Corrigendum, dated 16th April 1906, to Rule of Practice No. 128, dated 2nd April 1906.

The Chief Court directs that in the form of Quarterly Judicial Statement No. 2 prescribed by the said Rule two additional columns (Nos. 10 and 11) be opened with the headings "Total number of Processes issued." "Amount of fees collected," respectively, and that the following note be inserted at foot of the form :—

NOTE.—The figures under columns 10 and 11 are the totals for the quarter of those given in column 13 of the monthly statement of cases disposed of.

The Chief Court further directs that the following form be substituted for that of quarterly Judicial Statement No. 6 prescribed by the said Rule :—

QUARTERLY JUDICIAL STATEMENT No. 6 (CIVIL).

Statement showing the Receipts and Charges on account of the service of Process in the Central Nazarat. (This statement should be prepared by the Nazarat establishment.)

Name of Courts	Number of Processes received.	Amount of stamp fees collected on processes	Travelling allowance in connection with service or execution	Number of Amins	Number of Peons	Cost of process serving establishment deducting fines and stop-pages.	Office contingencies, cost of stationery, Peons' badges and other miscellaneous expenditure	Total of Columns 7 and 8	Remarks
1	2	3	4	5	6	7	8	9	10
I. District Judge's Court									
Sub-Judge's Court									
Pl. Munsiff's Court									
Addl. Munsiff's Court									
Total ...									
II. Outlying Courts in the Province ...									
II. Do outside the Province ...									

N. B.—In the case of processes received for service from Courts outside the Province the amount of fee under Column 8 should not be entered.

V. A. RAJARATNA MUDALIAR,
Registrar.

FINANCIAL DEPARTMENT.

Circular No. 2084—*T. A.* 163, *dated 9th April* 1906.

To—All Heads of Departments and Deputy Commissioners of Districts.

Under Articles 528 (2) and (4) and Note (1) to Article 561 (ii) of the Mysore Service Regulations, Non-gazetted and Ministerial Officers of Government and menial servants of certain classes are entitled to draw their actual travelling expenses by road, subject to a maximum of a specified rate per every mile of road travelled. It would appear that in a large number of cases, Heads of Offices or Departments allow these officers or servants the maximum mileage rates admissible to them without reference to the actual expenditure. This is irregular and leads to correspondence and delay in passing the bills in audit. Countersigning Officers are therefore requested to carefully scrutinize all claims of Non-gazetted Officers and menials in the light of the above remarks and not to pass the maximum rates as a matter of course.

N. G. BASU,
Comptroller.

EXCISE DEPARTMENT.

Notice, dated 17th April 1906.

It is hereby notified for the information of the public that Red Paint will be used in marking all toddy-producing trees in the Mysore State during the official year 1906-07.

N. GOPALIENGAR,
for *Excise Comr. in Mysore.*

EDUCATION DEPARTMENT.

Notification D. No. 43, *dated 7th April* 1906.

THE MYSORE VERNACULAR UPPER SECONDARY EXAMINATION.

The following revised Regulations of the Mysore Vernacular Upper Secondary Examination will come into force from November 1907 :—

1. The Mysore Vernacular Upper Secondary Examination will be held annually on the third Monday in November and the following days at the head-quarters of each district and at Channapatna and Chikballapur.

2. The Mysore Vernacular Upper Secondary Examination will be open to—

(*a*) Head-masters and Assistant Masters employed in teaching the IV and V Vernacular classes of all Government, Municipal, Aided or other Recognized Schools,

(*b*) Pupils of Normal Schools,

(*c*) Pupils of Upper Secondary Vernacular or Sanskrit Schools,

(*d*) All other persons who will be regarded as private candidates, provided they have passed the Lower Secondary Examination. The President of the Board for the management of the Local Examinations will however exempt deserving candidates from the condition requiring them to have passed the Lower Secondary Examination, if they have been teachers in Government, Municipal, Aided or other Recognized Schools for a period of not less than three years.

3. Undergraduates of the Madras University will be allowed to appear for the Mysore Vernacular Upper Secondary Examination in the Language and Science subjects.

4. Applications for admission to the Mysore Vernacular Upper Secondary Examination shall be sent so as to reach the Manager, Mysore Local Examinations, Bangalore, not later than the 15th of August, on printed forms which may be obtained from the Local Examination Office at Bangalore.

5. No candidate shall be registered unless he has previously paid a fee of Rs. 5 if he be a teacher or pupil candidate, or a fee of Rs. 7 if he be a private candidate.

6. Candidates for the Mysore Vernacular Upper Secondary Examination shall be examined in the following subjects :—

I. FIRST LANGUAGE—*Kannada.*—There shall be three papers: one paper of three hours' duration on the prescribed text including explanation of selected passages and questions on Grammar, Idiom and Analysis; one paper of two hours' duration on Advanced Grammar,

Etymology and Prosody as treated in Sabdamani Darpana, Nagavarma's Chandas and Essay I of Kannada Upanyasamanjari of R. Raghunatha Rao; and one paper of one hour's duration on Composition.

or,

Urdu.—There shall be three papers: one paper of three hours' duration on the prescribed text including explanation of selected passages and questions on Grammar, Idiom and Analysis; one paper of two hours' duration on Advanced Grammar, Etymology and Prosody as treated in (1) Misbah-ul-Quaid revised by Anjumani-Taraggui-Urdu and (2) Tazkera-tul-Balaghat—Two parts on Bayan and Badi and one paper of one hour's duration on Composition.

II. SECOND LANGUAGE—(*a*) *Sanskrit.*—In the Second Language there shall be three papers, each of three hours' duration; one paper on the prescribed Text-books, one on the Grammar, Structure and Idiom of the language as treated in Bhandarkar's First Book and Second Book Lessons I—XXVI, and one paper consisting of passages for translation from the Sanskrit Text-books into Kannada together with an unseen passage, also of a passage of narrative style of moderate length and difficulty, as well as sentences for translation from Kannada into Sanskrit.

or,

(*b*) (1) *Persian.*—There shall be one paper of three hours' duration on the prescribed text which shall include translation of selected passages and questions on Grammar, Idiom and Analysis as treated in the parts on Etymology and Syntax in Ahsan-ul-Quaid; and one paper of the duration of an hour and-a-half on translation from Urdu into Persian.

(2) *Arabic.*—There shall be one paper of three hours' duration on Tariquat-ul-Mubtakera, Parts I and II, which shall include translation of selected passages and questions on the Grammar, Structure and Idiom of the language as treated in Mifta-ul-adab; and one paper of the duration of an hour and-a-half consisting of passages for translation from Urdu into Arabic.

III.—MATHEMATICS :—

(*a*) *Arithmetic.*—Pure and Recurring Decimals. Practical methods of shortening labor in Multiplication and Division. Practice, Simple and Compound Proportion, Simple and Compound Interest, Square and Cubic Measure. Extraction of Square and Cubic Root. Proportional parts. Percentages and Averages. Profit and Loss. Present Worth and Discount. Compound Interest. Stocks. A paper of the duration of two hours and-a-half.

(*b*) *Algebra.*—The four simple rules, Identities and Substitutions, Resolution into Factors, G. C. M., and L. C. M. Involution, Evolution, Fractions, Simple Equations of one unknown quantity with easy problems. A paper of the duration of one hour and-a-half.

(*c*) *Euclid and Mensuration.*—Book I with easy deductions. Easy problems of mensuration of the standard prescribed for the Lower Secondary Examination. A paper of two hours' duration.

[NOTE.—Female candidates will be allowed to bring up Free-hand Outline Drawing up to the standard of the Madras Technical Examination of the Elementary Grade as an alternative subject to Algebra, Euclid and Mensuration. The subject will carry 70 marks.

The following is the syllabus in Free-hand Outline Drawing—Elementary Examination :—

The Examination shall be a practical one comprising—

(1) An examination of one and-a-half hours' duration in *drawing from flat examples.*

From a given diagram or example of ornament to make a drawing in outline, to a slightly enlarged or reduced scale, without the use of compasses or any other mechanical aids.

(2) An examination of one and-a-half hours' duration in *model drawing.*

To draw in outline one or two common objects of simple form, such as a jug and basin; tea cup and saucer; box, books, vases, or the regular models, *viz.*, cube, prism, pyramid, cone and cylinder.

Text-books recommended.—Poynter's South Kensington Drawing Books (Ornament, Books II, III, IV, and Elementary Design, I and II), and the "Madras School of Arts Drawing Book."]

IV. SCIENCE :—

(*a*) *Elementary Science.*—(1) Professor Kero Lakshmana Chatre's translation of the Primer of Physics. (2) Cooke's Manual of Natural Philosophy. (3) As much of the Elements of Chemistry, Physics, Botany and Geology as is required for the teaching of Agriculture and Hygiene in Lower Secondary Schools. For Syllabus see Appendix. (4) A general knowledge of the nature, composition and uses of common objects—animal, vegetable and mineral—such as would be required for giving object lessons. A paper of two hours' duration.

(b) *Hygiene.*—Indian Domestic Economy and Hygiene. A paper of two hours' duration.

(c) *Agriculture.*—(For Syllabus see Appendix). A paper of two hours' duration.

or,

Either Needle-work or Music.—(For female candidates only)—Under Music it will suffice to take up either (1) Vocal Music or (2) one kind of Instrumental Music, the instrument chosen being the Vine, the Violin or the Pianoforte. The Syllabuses of Needle-work, of Vocal Music and of the Pianoforte, the Vine and the Violin are given in the Appendix.

V. HISTORY AND GEOGRAPHY—

(a) *History.*—(1) Outlines of the History of India up to 1876 A. D. (2) Outlines of the History of England up to 1858 A. D. A paper of three hours' duration.

(b) *Geography*—(1) Geikie's Primer of Physical Geography. (2) General Geography and the Geography of India in particular. (3) Map-drawing—Map of some country or portion of a continent on prepared projections without outlines. A paper of three hours' duration.

7. The Vernacular Upper Secondary Examination shall be conducted in the order of time and subjects set forth in the following table, and the number of marks assignable to each subject shall be as therein specified :—

Days	Hours	Subjects	Marks	
First day ...	10— 1	*First Language*—Kannada or Urdu, Text-books ...	60	130
	2— 4	Do do Advanced Grammar ...	40	
	4-5—5-5	Do do Composition ...	30	
Second day ...	10 —1	Sanskrit Text-books	60	120
		Persian Text-books and Grammar	60	
	2 —5	Sanskrit Grammar	60	
		Arabic Text-books and Grammar	60	
Third day ...	10— 1	Translation from Sanskrit into Kannada and Kannada into Sanskrit.	60	60
	10—11.30	Translation from Urdu into Persian	25	
	11-35—1-5	Translation from Urdu into Arabic	35	
Fourth day ...	10—12-30	Arithmetic	50	120
	1-30—3-30	Euclid and Mensuration	40	
	3-35—5-5	Algebra	30	
	2— 5	Freehand Drawing	70	
Fifth day ...	10—12	Physical Science	40	120
	1— 3	Hygiene	40	
	3-5—5-5	Agriculture	40	
ixth day ...	10— 1	History	50	100
	2— 5	Geography	50	
		Total ...		650

The Examination in Needle-work and Music for female candidates will be held on the seventh day at a place and hour to be previously notified.

8. Candidates failing to obtain—

(1) 35 per cent of the marks assigned to the First Language, and

(2) 30 per cent of the marks assigned to each of the other subjects, shall not pass.

Those of the successful candidates that obtain not less than sixty per cent of the aggregate number of marks shall be placed in the First Class, all others in the Second Class.

9. A certificate signed by the President of the Local Examination Board shall be given to each passed candidate, setting forth the date of the examination, the First and Second Languages and the other subjects in which the candidate was examined and the class in which he was placed.

APPENDIX—SYLLABUSES.

I. AGRICULTURE.

(1) *Objects and conditions of Agriculture.*

(2) *Soils.*—Formation. Physical characters. Fertility and barrenness. Improvement of soil. Physical effects of rain, sun, etc., on soils. The sub-soil. Salt land, its formation and improvement.

(3) *Tillage.*—Objects of tillage. Deep and shallow tillage. Tillage of dry and wet lands. Ploughing, grubbing, sub-soiling, harrowing, ridging, rolling. Implements and tools used in tillage and seed-sowing. After-cultivation.

(4) *Manuring.*—Treatment and application of farm manures. Green manuring. Use of special manures, *e. g.*, cakes, saltpetre, bones, lime, etc., commonly available in Southern India. Top dressing.

(5) *Irrigation.*—Economy, use and application of water. Water-lifts in common use. Origin of springs : well-sinking.

(6) *Crops.*—Rotations and mixed cropping. Fallowing. Seeds. Germination and conditions favorable for germination. Pedigree influence. Collecting seed. Change of seed. Seed-sowing. Thick and thin sowing. Shallow and deep sowing. Testing seed. Dressing seed. Transplanting.

The principal cereal, pulse, industrial and fodder crops, *viz.*—Ragi, paddy, cumboo, tennai, cholum, maize, red-gram, Bengal-gram, horse-gram, black-gram, green-gram, ground-nut, castor-seed, gingelly, cotton, indigo, sugar-cane, tobacco, plantain.

Pasture land and its treatment. Storage of fodder.

(7) *Stock.*—Breeding, care and management of cattle and sheep. Breeds of Southern India Dairying.

Note.—The whole subject shall be treated from a practical point of view, chemistry being introduced as little as possible. If chemistry is required, it should be of an elementry character.

ELEMENTS OF PHYSICS AND CHEMISTRY (IN BRIEF OUTLINE).

Three states of matter. Atoms. Properties of Solids, Liquids and Gases. The Forces of nature briefly defined and illustrated. Heat. Sources of Heat. Effects of Heat. Transmission of Heat. The Thermometer. Elements and Compounds. Chemical compounds and mechanical mixtures. Solution and suspension. How chemical combination takes place in definite proportions. The elements forming the constituents of soils and plants. Chief chemical compounds forming the constituents of soils, plants and manures. General characters of acids, alkalies and salts.

The most important elements.—Oxygen, hydrogen, nitrogen, carbon, chlorine, sulphur, phosphorus, silicon, iron, aluminium, calcium, magnesium, sodium, potassium.

Water.—Hydrogen, its preparation, properties, etc. Oxygen, its preparation, properties, etc.

Air.—Nitrogen, its preparation, properties, etc. Carbonic acid, its preparation, properties, etc.

ELEMENTS OF GEOLOGY.

Rock defined. Sedimentary rocks. Organic rocks. Igneous rocks. Chemical composition of Quartz, Felspar group, Mica group, Hornblende and Augite groups, Zeolites. (The above to be demonstrated with samples.)

The Geology of the Province of Mysore as given in the Gazetteer.

ELEMENTS OF BOTANY (IN BRIEF OUTLINE).

Plant life. The root. The stem. The leaves. The flowers. Fertilization. The seed. The embryo. Germination. Nutrition of plants. Composition of plants.

II. NEEDLE-WORK.

Plain Needle-work :—

Hemming.	Stitching.	Patching.
Felling.	Button-holing	Darning.

To cut out from a pattern and make a cotton jacket (Jubba) 15 inches long.
Gathering and putting into band, herring-boning.
To cut out and make a boy's cotton coat 18 inches long.

Fancy Needle-work :—

Crochet.
Knitting.
Crewel-work.

To crochet or knit a boy's comforter.
To crochet or knit a pair of baby's socks.
To knit a pair of boy's socks.
To embroider a boy's cap in crewel.

III. PIANOFORTE.

Hamilton or Hemy's Pianoforte Instructor (complete).
Major, Minor and chromatic scales.
Ten short easy pieces from series like E. Rimbaults' "The Young Pupil," W. Small-wood's "Home Treasures," James Bellak's "Dew Drops," etc.
Ten pieces of Dance Music (Duets and Solo) and ten easy accompaniments such as those of English ballads, Irish and Scotch songs.
Theory of Music. Names of various terms, meanings of various signs.

IV. ಗಾನಕ್ಕೆ ತಿಳಿಯಬೇಕಾದ ಅಂಶಗಳು.

(1) ಸರಳೆ.

ರಾಗ.	ತಾಳ.	
		ಸರಿಗಮಪಧನಿಸ। ಸನಿಧಪಮಗರಿಸ.
ಮಾಯಾ ಮಾಳವಗೌಳ.	ಆದಿತಾಳ.	

(2) ವರಿಸೆಗಳು.

ಡಿಟೋ	ಡಿಟೋ	ಸರಿಗಮ, ಸರಿಗಮ, ಸರಿಗಮ, ಪಧನಿಸ ॥
ಡಿಟೋ	ಡಿಟೋ	ಸರಿಗಮ, ಸರಿ, ಸರಿ, ಸರಿಗಮ, ಪಧನಿಸ ॥
ಡಿಟೋ	ಡಿಟೋ	ಸರಿಗ, ಸರಿಗ, ಸರಿ, ಸರಿಗಮ, ಪಧನಿಸ ॥
ಡಿಟೋ	ಡಿಟೋ	ಸರಿಗಮ, ಪಾ, ಸರಿ, ಸರಿಗಮ, ಪಧನಿಸ ॥
ಡಿಟೋ	ಡಿಟೋ	ಸರಿಗಮ, ಪಮಗರಿ, ಸರಿಗಮ, ಪಧನಿಸ ॥
ಡಿಟೋ	ಡಿಟೋ	ಸರಿಗಮ, ಪಮಧಪ, ಸರಿಗಮ, ಪಧನಿಸ ॥
ಡಿಟೋ	ಡಿಟೋ	ಸರಿಗಮ, ಪಮಧಪ, ಸನಿರಿಸ, ಸನಿಧಪ ॥
ಡಿಟೋ	ಡಿಟೋ	ಮಗರಿಗ, ಸರಿಗಮ, ಪಮಗಮ, ರಿಗಮಪ ॥

(3) ಜಂಟಿ ವರಿಸೆಗಳು.

ಡಿಟೋ	ಡಿಟೋ	ಸಸ, ರಿರಿ, ಗಗ, ಮಮ, ಪಪ, ಧಧ, ನಿನಿ, ಸಸ ॥
ಡಿಟೋ	ಡಿಟೋ	ಸಸ, ರಿರಿ, ಗಗ, ಮಮ, ರಿರಿ, ಗಗ, ಮಮ, ಪಪ ॥
ಡಿಟೋ	ಡಿಟೋ	ಸಸ, ರಿರಿ, ಗಗ, ರಿರಿ, ಸಸ, ರಿರಿ, ಗಗ, ಮಮ ॥
ಡಿಟೋ	ಡಿಟೋ	ಸಾಸಸ, ರೀರಿರಿ, ಗಾಗಗ, ಮಾಮಮ, ಪಾಪಪ, ಧಾಧಧ, ನೀನಿನಿ ಸಾಸಸ ॥
ಡಿಟೋ	ಡಿಟೋ	ಸಾಸಸ, ರೀರಿರಿ, ಗಾಗಗ, ಮಾಮಮ, ರೀರಿರಿ, ಗಾಗಗ, ಮಾಮಮ, ಪಾಪಪ॥
ಡಿಟೋ	ಡಿಟೋ	ಸಾಸಸ, ರೀರಿರಿ, ಗಾಗಗ, ರೀರಿರಿ, ಸಾಸಸ, ರೀರಿರಿ, ಗಾಗಗ, ಮಾಮಮ ॥
ಡಿಟೋ	ಡಿಟೋ	ಸಸರಿ, ಸಸರಿ, ಸರಿ, ಸಸ, ರಿರಿ, ಗಗ, ಮಮ ॥
ಡಿಟೋ	ಡಿಟೋ	ಸಸರಿ, ಸಸರಿ, ಸರಿ, ಸರಿ, ಸಾಸಸ, ರೀರಿರಿ, ಗಾಗಗ, ಮಾಮಮ ॥

(4) ಅಲಂಕಾರಗಳು.

ಡಿಟೋ	ಧೃವತಾಳ	ಸರಿಗಮ, ಗರಿ, ಸರಿಗರಿ, ಸರಿಗಮ,
ಡಿಟೋ	ಮಠ್ಯತಾಳ	ಸರಿಗರಿ, ಸರಿ, ಸರಿಗಮ ॥
ಡಿಟೋ	ರೂಪಕತಾಳ	ಸರಿ, ಸರಿಗಮ ॥
ಡಿಟೋ	ಝಂಪತಾಳ	ಸರಿಗ, ಸರಿ, ಸರಿಗಮಾ ॥
ಡಿಟೋ	ತ್ರಿಪುಟತಾಳ	ಸರಿಗ, ಸರಿಗಮ,
ಡಿಟೋ	ಅಟತಾಳ	ಸರೀಗಾ, ಸಾರಿಗಾ, ಮಾ, ಮಾ ॥
ಡಿಟೋ	ಏಕತಾಳ	ಸರಿಗಮ, ರಿಗಮಪ ॥

(5) ಗೀತಗಳು.

ಮಲಹರಿ ರಾಗ	ರೂಪಕತಾಳ	ಸರಿಮಾಗರಿ, ಸರಿಗರಿಸಾ
ನಾಟ	ಏಕತಾಳ	ಸಸಸನಿ, ಪಸಸನಿ
ಮೋಹನ	ಡಿಟೋ	ಗಪಧಸ, ಧಧರಿಸ
ಕಾಂಭೋಜಿ	ಡಿಟೋ	ಸಾನಿಪ, ಧಧಸಾ
ಸುರಟಿ	ತ್ರಿಪುಟತಾಳ	ನಿಸರಿ, ಮಗರೀ, ರೀರಿಸ, ನಿಸಾ
ಕಲ್ಯಾಣಿ	ಡಿಟೋ	ಸಸ, ಸನಿ, ಧನಿಸನಿ, ಧಪ, ಧಪಮಪ
ಬೇಗಡೆ	ಡಿಟೋ	ಮಗಮ, ಪಾಧಪ, ನಿಧಪ, ಮಗಮಪ
ಆನಂದಭೈರವಿ	ಏಕತಾಳ	ನಿಧನಿಸ, ಸಾಸಸ, ಗರಿಸನಿ, ನಿಧಪಮ
ಶ್ರೀರಾಗ	ತ್ರಿಪುಟ	ಸನಿಸ, ರಿಮಪಮಪ, ಪಮರಿ, ರಿಗರಿಸ
ಮಧ್ಯಮಾವತಿ	ಏಕತಾಳ	ಸಾನಿನಿ, ಪಾಮರಿ, ಪಪಮಾ, ರಿರಿಸಾ

(6) ಸ್ವರಜತಿಗಳು.

ಕನ್ನಡ	ಆದಿತಾಳ	ಸಾ, ನೀಸಧಾಪಮ, ಗಾಮಧಾ
ಹಂಸಧ್ವನಿ	ರೂಪಕ	ಸಾ, ಸನಿಪ, ಗರಿಸಾ, ನಿಪನಿಸಾ
ಆರಭಿ	ಆದಿತಾಳ	ಸಾ, ಸನಿಧಧ, ಪಪಮಗ, ರಿರಿಸಾ
ಕಾಪಿ	ರೂಪಕ	ಪಾ, ಧನಿಪಮಾ, ಧಪಮರೀ, ಗಮರಿಸಾ
ಸಾರಂಗ	ಡಿಟೋ	ಸಾ, ಸನಿಧಪ, ಮರೀ, ಗಮರಿಸಾ

ರಾಗ.	ತಾಳ.	
		(7) ವರ್ಣಗಳು.
ಕಲ್ಯಾಣಿ	ಆದಿತಾಳ	ವನಜಾಕ್ಷಿರೊ
ಸಾರಂಗ	ಡಿಟೋ	ಇಂತ ಮೋಡಿಶಾಯ
ಶ್ರೀರಾಗ	ಡಿಟೋ	ಸಾಮಿನಿನ್ನೇಕೋರಿ
ಶಂಕರಾಭರಣ	ಡಿಟೋ	ಸಾಮಿನಿನ್ನೇಕೋರಿ
ಕಮಾಚು	ಡಿಟೋ	ಸರಸಮು ದೆಲುಪುರ
		(8) ಕೀರ್ತನೆಗಳು.
ಕಮಾಚು	ಆದಿತಾಳ	ಸಾರಸಸಮಮುಖ
ಜನರಂಜಿನಿ	ಡಿಟೋ	ಸ್ಮರಣೇಸುಖಂ
ಆನಂದಭೈರವಿ	ಚಾಪು	ಹಿಮಾಚಲತನಯ ಬ್ರೋ
ನಾರಾಯಣಿ	ಡಿಟೋ	ಮಹಿಷಾಸುರಮರ್ದಿನಿ ನಮಾಮಿ
ಖರಹರಪ್ರಿಯ	ರೂಪಕ	ರಘುವೀರ ರಣಧೀರ
ಡಿಟೋ	ಡಿಟೋ	ಒಕಮಾಟ ಒಕಬಾಣಮು
ಘರ್ಜ	ಚಾಪು	ತ್ರಿಲೋಕಮಾತ ನನುಬ್ರೋವು
ಪೂರ್ಣಷಡ್ಜ	ರೂಪಕ	ಲಾವಣ್ಯರಾಮ ಕನುಲಾರಜೂಡರೆ
ಗರುಡಧ್ವನಿ	ಆದಿತಾಳ	ಆನಂದಸಾಗರ ವಿಾದನಿ
ಮಾಂಜಿ	ರೂಪಕ	ರಾಮಚಂದ್ರೇಣ ಸಂರಕ್ಷಿತೋಹಂ
		ಕಾಯ್ಯೆ ಶ್ರೀಗೌರಿ (ಇಂಗ್ಲೀಷ್ ಮಟ್ಟು)
		(9) ಮಟ್ಟುಗಳು.
ಬೇಗಾಗು	ರೂಪಕ	ತ್ರಿಪುರ ಸುಂದರೀ, ತಾರಾಧೀಶನಿಭಾನನೆ
ಘರ್ಜ	ಆದಿತಾಳ	ಮಂಗಳಂ ಶಂಕರಿ ದೇಹಿವೇ
ಕಮಾಚು	ರೂಪಕ	ಪಾಲಿಸು ಶ್ರೀಪ್ರಾಲೇಯಪರ್ವತಬಾಲೆ
ಕಾಪಿ	ಆದಿತಾಳ	ಪರಿಪಾಹಿ ನಂದಗೋಪಬಾಲ
ಸುರಟಿ	ಡಿಟೋ	ಶ್ರೀಶಂಭೋ ಕಲ್ಯಾಣಮೂರ್ತೇ
ಭೈರವ	ರೂಪಕ	ಶಂಕರಿ ಮಾಂ ಪಾಲಯಾಶು
ಬೇಹಾಗು	ಡಿಟೋ	ಸುವ್ವಿಸುವ್ವಿಯನುಚುಬೂಡರೆ
ಖರಹರಪ್ರಿಯ	ಡಿಟೋ	ರಘುಕುಲನಾಯಕಾ ನತೇಪ್ಸಿತಾರ್ಥದಾಯಕ
ಜುಂಜೂಟಿ	ಡಿಟೋ	ಇಂದಿರೇ ಮಾಮಕೀನ ಮಂದಿರೆನಿವಸಸದಾ
ಖರಹರಪ್ರಿಯ	ಡಿಟೋ	ಕಂತುಕ ಖೇಲನಂ ಕಲಯ ಕಮಲ ಲೋಚನ

V. ವೀಣೆ, ಪಿಟೀಲು ಇವುಗಳ ವಾದನಕ್ಕೆ ತಿಳಿಯಬೇಕಾದ ಅಂಶಗಳು.

ಗಾನಕ್ಕೆ ಕೊಟ್ಟಿರುವ ಪಟ್ಟಿಯಂತೆಯೇ; ಆದರೆ (9) ನೇ ಪ್ರಕರಣದ ಕೆಳಗೆ ಕೊಟ್ಟಿರುವ ಮಟ್ಟುಗಳಿಗೆ ಬದಲಾಗಿ ಕೆಳಗೆ ತಿಳಿಸಿರುವ 45 ತಾನಗಳನ್ನು ಬಾಜಿಸಬೇಕು.

ತಾನಗಳು. (ತಾನ)

	ಸಂಖೆ.
ನಾಟ	10
ಗೌಳ	5
ವರಾಳಿ	5
ಆರಭಿ	5
ಶ್ರೀರಾಗ	5
ನಾರಾಯಣಗೌಳ	5
ರೀತಿಗೌಳ	5
ಕೇದಾರ	5

H. J. BHABHA,
Inspr.-Gen. of Education.

FOREST DEPARTMENT.

Dated 2nd April 1906.

Under the authority of Government Proceedings No. R. 7581-90—Ft. 15-02-13, dated Bangalore, 20th December 1905, the following statement showing the ways allowed to the public and particulars of water supplies, etc., available in the undermentioned State Forests of the Tumkur District, is published for the information of the public :—

HULIYURDURGA FOREST.

KUNIGAL TALUK.

Huliyurdurga Block.

1. Cart-track from Huliyurdurga to Kalammanagudi, twenty yards wide and one mile and five furlongs long, open to all traffic. It enters the Huliyurdurga Forest Block at cairn No. 33 and passes through the forest for a distance of one mile and three furlongs and leaves the forest between cairns Nos. 71 and 72 near the Devambudi tank.

2. Foot-path from Huliyurdurga to Jodi Vaddarpalli, four feet wide and five furlongs and 130 yards long, open to men and cattle. It enters the reserve between cairns Nos. 17 and 18 and leaves it near cairn No. 88, passing through the forest in an easterly direction.

3. Foot-path from Huliyurdurga to Hittalpura, four feet wide and ten furlongs long, open to men and cattle. It enters the Huliyurdurga reserve between cairns Nos. 13 and 14 and meets Ujjani Block line at cairn No. 96, finally leaving the Ujjani Block between Nos. 130 and 131 passing through the forest in a south-easterly direction.

Ujjani Block.

1. Foot-path from Jodi Vaddarpalli to Hittalpura, four feet wide and five furlongs and 150 yards long, open to men and cattle. It enters the forest near cairn No. 7 and leaves between cairns Nos. 122 and 123, passing through the forest in a southerly direction.

2. Foot-path from Benachikal to Ujjani village, four feet wide and eight furlongs long, open to men and cattle. It enters the forest at cairn No. 14 and leaves the same between cairns Nos. 115 and 116, passing through the forest in a southerly direction.

3. Foot-path from Benachikal to Kenchanahalli, four feet wide and six furlongs long, open to men and cattle. It enters the forest between cairns Nos. 23 and 24 and then finally leaves the same between cairns Nos. 45 and 46, passing through the forest in an easterly direction.

4. Foot-path from Kenchanahalli to Kadeboranahalli, four feet wide and four furlongs long, open to men and cattle. It enters the reserve between cairns Nos. 49 and 50 and then passes to Survey No. 64 of Kadeboranahalli, passing through the forest in a south-westerly direction.

5 Foot path from Handalkere to Ujjani *via* Kadeboranahalli, six feet wide and two miles and five furlongs long, open to men and cattle. It enters the forest between cairns Nos. 55 and 56, and quits it between cairns Nos. 111 and 112 crossing Kadeboranahalli situated within the reserve, passing through the forest in a south-westerly direction.

6. Foot-path from Tavarekere to Kachihalli, four feet wide and one mile long, open to men and cattle. It enters at cairn No. 64 and leaves the reserve between cairns Nos. 81 and 82, passing through the forest in a southerly direction.

7. Foot-path from Kadeboranahalli to Benachikal, about six furlongs long and four feet wide. It enters the forest between cairns Nos. 5 and 6, passes through the forest in a north-westerly direction and quits it between cairns Nos. 19 and 20.

Ippadi Block.

1. Cart-track from Ippadi to Harohalli, six feet wide and four furlongs long, open to all traffic. It enters the forest at cairn No. 2 and leaves the same between cairns Nos. 78 and 79, passing through the forest in a south-easterly direction.

2. Foot-path from Hutridurga to Harohalli, four feet wide and three furlongs and 105 yards long, open to men and cattle. It enters the reserve between cairns Nos. 22 and 23 and leaves the same between cairns Nos. 72 and 73, passing through the forest in a southerly direction.

3. Cart-track from Hulikatte to Neelasandra, eighteen feet wide and one mile and 100 yards long, open to all traffic. It enters the block at cairn No. 42 and leaves between cairns Nos. 68 and 69, passing through the forest in a westerly and south-westerly direction.

4. Cart-track from Bayadarahalli to Magadi high road, sixteen feet wide and four furlongs long open to all traffic. It enters the block between cairns Nos. 53 and 54 and then finally leaves the reserve at 7—39th mile stone, passing through the forest in a northerly and easterly direction.

5. Cart-track from Gadde Tippasandra to Ippadi, four furlongs long, enters the forest near cairns Nos. 119 and 120 and leaves the forest near cairn No. 122, passing through the forest in a northern direction.

Under the authority of Government Proceedings No. R. 7581-90—Ft. 15-02-13, dated Bangalore, 20th December 1905, the following statement showing the ways allowed to the public and particulars of water supplies, etc., available in the undermentioned State Forests of the Tumkur District, is published for the information of the public :—

TIRTHARAMPURA FOREST.

CHIKNAYAKANHALLI TALUK.

1. Foot-path leading from Godekere to Tirthapura, called Aravattige Alladamaradadari, about two yards wide and two miles long. It enters the State Forest at 3rd mile, 7th furlong of the demarcation line and at south-east corner of Survey No. 12 of Manchikatte, runs north-east through Survey Nos. 41 and 42 of Sandenahalli and 34 of Yerrekatte villages, and leaves the demarcation line at fifteenth mile and fourth furlong at the south-west corner of Survey No. 35 of Yerrekatte. It is open to both people and cattle.

2. Foot-path leading from Bullanahalli to Dodrampura and Tirthapura, about two yards wide and half a mile long. It enters the State Forest at the fourth mile about 100 yards south-west of north-east corner of Survey No. 7 of Bullanahalli and proceeds in the north-eastern direction through Survey Nos. 42 of Sandenahalli and 34 of Yerrekatte villages, and joins the Godekere-Tirthapura path after passing in the last named survey number about 100 yards. It is open to both people and cattle.

3. Cart-track leading from the 65th mile stone on Bangalore-Shimoga road to Tirthapura about five yards wide and three miles long. It enters the State Forest at the twenty-fourth mile and sixth furlong at the point where Survey Nos. 20 and 21 of Bommarasanahalli meet, passing through the Survey No. 25 of Bhogasandra and also through Survey Nos. 14, 16 and 7 of Karadikallu villages in a north-western direction and 136 of Kondli, in which it changes its direction to the north after passing about 150 yards, and leaves the demarcation line at the nineteenth mile, third furlong, about two furlongs from the south-east corner of Survey No. 136 of Kondli to the north-west of it or about two furlongs from south-west corner of survey number 1 of Oblapura.

4. Cart-track leading from Kondli and Mavinhalli to Dodrampura, about five yards wide and one and a quarter miles long. It enters the State Forest about twenty-five yards from the south-east corner of Survey No. 22 of Mavinahalli, and passing through the same survey number in a northern direction, leaves the demarcation line at sixteenth mile, 7th furlong, about 100 yards from the north-east corner of the abovementioned survey number to the west of it.

5. Foot-path leading from Kondli to Maganayakanakote called Sulekalve foot-path, about two yards wide and two miles long. It enters the State Forest at thirtieth mile, sixth furlong, at a point about three furlongs from the south-east corner of Survey No. 8 of Mudlupalya to the north of it, passing through Survey Nos. 15 and 16 of Karadikallu, going exactly to the east and then to the north-east, and crosses cart-track No. 3, whence it changes its direction to the east, passing through Survey Nos. 14 of Karadikallu and 25 of Bhogasanda, leaves the demarcation line at twenty-third mile, fourth furlong, near the north-west corner of Survey No. 18 of Bhogasandra. It is open to both people and cattle.

6. Foot-path leading from Kondli to Oblapura, about two yards wide, one mile long. It enters the State Forest at thirty second mile, fifth furlong, about fifteen yards from the south-east corner of Survey No. 61 of Kondli to the west of it, passing through Survey No. 136 of Kondli in a northern direction, and leaves the demarcation line at eighteenth mile, fourth furlong, about two furlongs from the south-east corner of Survey No. 41 of Chikrampura to the south-east of it.

7. Foot-path leading from Chiknayakanhalli to Madanmadu called Thikanakanavedari, about two yards wide and one and a quarter miles long. It enters the State Forest at seventh mile, third furlong, about fifteen yards from the north-east corner of Survey No. 11 of Gollanahalli, proceeds in the eastern direction for about three-fourths of a mile along Survey No. 9 of Homblikatte, and then it changes its direction to the north-east and leaves the demarcation line at twelfth mile, fourth-furlong, at about eighty yards from the north-east corner of Survey No. 9 of Homblikatte to the south of it. It is open to both people and cattle.

8. Foot-path leading from Kondli to Adalgere about two yards wide and half a mile long. It enters the State Forest at twenty-seventh mile, sixth furlong, about half a mile

from the north-east corner of Survey No. 37 of Sivasandra to the south of it, passing directly to the east in Survey No. 42 of Virupakshipura, and leaves the line at the twenty-sixth mile, fourth furlong, about three furlongs from the north-east corner of the above said survey number to the south of it. It is open to both people and cattle.

9. Waterway to Kemparayanavajra situated in Survey No. 36 of Ganehal village, about two furlongs in length, is allowed for the use of the people and the cattle of Ganehal village.

10. A way twelve yards wide hedged on either side from a bandh twenty yards from the fourth furlong stone of the eighteenth mile of the demarcation line on the boundary of Survey No. 35 of Gudda-Oblapura for a distance of 1,120 yards to Pikkalhalla, for water for the use of the cattle belonging to the Gudda-Oblapura and Gollarhatti of Hagalvadi Hobli, Gubbi Taluk. This concession is allowed subject to be withdrawn if any of the terms laid down in a mutchalika dated 5th February 1899, executed on a stamped paper by the villagers, are violated.

MANCHALDORE FOREST.

GUBBI TALUK.

1. Foot-path leading from Manchaldore to Hagalvadi and other places, about two yards wide and two and a half miles long. It enters the State Forest at twenty-second mile, fifth furlong, passing directly to the west through Survey Nos. 79, 80 and 81 of Manchaldore and 36 of Karihalli, leaves the demarcation line near the nineth mile. It is open to both people and cattle.

2. Foot-path leading from Guddenhalli to Machanahalli, two yards wide and one and three-fourth miles long. It enters the State Forest at tenth mile, seventh furlong, passing through Survey Nos. 38, 20 and 21 of Karihalli and 24 of Machanahalli, towards the east, leaves the demarcation line at twentieth mile, third furlong, at the north-east corner of Survey No. 20 of Machanahalli. It is open to people and cattle.

3. Foot-path leading from Hagalvadi to Huvvinkatte, two yards wide and one and one-fourth miles long. It enters the State Forest at nineth mile, fourth furlong, about two furlongs south of the north-west corner of Survey No. 105 of Huvvinkatte, passing east through Survey Nos. 105 and 106 of Huvvinkatte leaves the demarcation line at second mile, second furlong, about two furlongs south of the north-east corner of Survey No. 106 of Huvvinkatte. It is open to both people and cattle.

4. Cart-track leading from Karimadenahalli to Kuntaramanahalli, five yards wide, two and a half miles long. It enters the State Forest at the sixteenth mile, passing directly towards south through Survey Nos. 68 of Haralukatte and 45 and 44 of Kalinganahalli, leaves the demarcation line at eighteenth mile, third furlong. It is open to carts, people and cattle.

5. Cart-track leading from Shivarampur to Kuntaramanahalli, five yards wide, two and a half miles long. It enters the State Forest at the fourteenth mile, third furlong, about one furlong south-west of the north-west corner of Survey No. 68 of Haralukatte, passing through the same survey number for nearly half a mile, and then it leaves the demarcation line at fourteenth mile, second furlong, about two furlongs south of the north-east corner of the above named survey number, and again enters the State Forest at fifteenth mile, seventh furlong, passes through Survey Nos. 68 and 81 of Haralukatte and Survey Nos. 45 and 44 of Kalinganahalli and Survey No. 24 of Muchalanahalli all along in a south-easterly direction, and leaves the forest at the twentieth mile, fourth furlong. It is open to carts, people and cattle.

6. Foot-path from Shivarampura for the use of both people and cattle is allowed to the raiyats of Gundlukunte land, which is about two yards wide and three-fourth mile long from fourteenth mile, first furlong, to Gudlukunte through Survey No. 68 of Haralkatte.

Under the authority of Government Proceedings No. R. 7581-90—Ft. 15-02-13, dated Bangalore, 20th December 1905, the following statement showing the ways allowed to the public and particulars of water-supplies, etc., available in the undermentioned State Forest of the Tumkur District, is published for the information of the public :—

BUKKAPATNA FOREST.

1. Huliyar-Bukkapatna high road, six yards wide and three and one-fourth miles long, open for carts, people and cattle. It enters the State Forest at forty-third mile, second furlong, and leaves the forest at forty-sixth mile, fourth furlong.

2. Hagalvadi-Ramanahalli foot-path, six feet wide and three miles long, open for people, pack animals and cattle. It enters the State Forest near the north-east corner of Survey No. 4

of Siddapur, and passing through Survey Nos. 3, 1, 54, 55, 51, 57, 60 and 61 of Siddapur Balekonu and Survey No. 40 of Ramanahalli, leaves the State Forest in Survey No. 40 of the last named village at a point about three furlongs north from the middle bandhs of the southern boundary of the same survery number.

3. Hagalvadi-Timmanahalu foot-path, four feet wide and about four miles long, open for people and cattle. It enters the State Forest in Survey No. 17 of Siddapur at a place about hundred yards from the north-east corner, and runs in a westerly direction through Survey Nos. 3, 2, 1, 54, 53, 45 and 27 of the last named village and Survey No. 19 of Ghantenahalli, and leave the State Forest at the south-east corner of Survey No. 88 of Timmanahalli.

4. Jankal-Badape Gudlu foot-path, four feet wide and about two and a half miles long, open for people and cattle. It enters the State Forest in Survey No. 14 of Basavanahalli about hundred yards from the south-west corner of the same survey number, and runs in a westerly direction through Survey Nos. 17 of Basavanhalli and 24 of Mailkebbe, and leaves the State Forest about seventy-five yards south of the boundary bandhs of Survey Nos. 14 and 15 of Hullenahalli and Survey Nos. 24 and 12 of Mailkebbe.

5. Jankal-Timmanahalli foot-path, four feet wide and about six miles long, open for people and cattle. It enters the State Forest in Survey No. 16 of Basavanahalli, runs in a south-westerly direction, passing through Survey Nos. 16 of Basavanahalli, 51, 50, and 48 of Siddapur, 27, 26, 25, 24, and 19 of Ghantenahalli, and leaves the State Forest in Survey No. 88 of Timmanahalli.

6. Cart-track from Jankal to Huliyar-Bukkapatna road, six yards wide and about three miles long, open for carts and people. It enters the State Forest in Survey No. 32 of Jankal about a furlong south from the boundary bandhs of Jankal and Budigudda kaval and runs in a north-westerly direction through Survey Nos. 18, 20 and 21 of Budigudda until it meets No. 1 high road.

7. Pura-Dabgunte cart-track, six yards wide and about four miles long, open for carts and people. It enters the State Forest in Survey No. 62 of Pura at the boundary bandhs of Survey No. 62 of Tippanahalli and runs in a westerly direction through Tippanahalli and Survey Nos. 4, 3, 2, 1 of Maridasanahalli and 40 of Marenadu, and leaves the State Forest in Survey No. 40 of Marenadu at a place about two furlongs from the south-west corner of the same survey number.

8. Hunsekatte-Marenadu foot-path, four feet wide and four miles long, open for cattle and people. It enters the State Forest near Venkatapur in Survey No. 133 of Yerradakatte, and runs in a westerly direction through Survey Nos. 1 and 2 of Venkatapura and Survey No. 2 of Kambada and Survey Nos. 1 of Suladahal and 1 of Maridasanahalli and 40 of Marenadu, and leaves it in Survey No. 40 of Marenadu.

9. Yerradakatte-Marenadu foot-path, four feet wide and about three miles long, open for people only. It enters the State Forest in Survey No. 143 of Yerradakatte, and runs in a westerly direction through Survey Nos. 140 and 19 of Yerradakatte and Survey Nos. 2 and 1 of Boranhal until it meets foot-path No. 10.

10. Ajjanahalli-Marenadu foot-path, four feet wide and about seven miles long, open for people and cattle. It enters the State Forest in Survey No. 55 of Ajjenahalli, and runs in a south-westerly direction, passing through Survey No. 9 of last-named village and Survey Nos. 12, 13, 14 and 19 of Gargarpente and Survey No. 1 of Boranahal, No. 2 of Suladahal, joins foot-path No. 8 at the boundary bandhs of Suladahal, Maridasanahalli and Marenadu.

The following privileges were recognized at settlement subject to regulation and restriction by the Deputy Commissioner of the District and withdrawal in case of abuse :—

1. A way twelve yards wide for cattle only from Nerlagudda to the stream of Bellarahalla *via* Bornahal for a distance of two miles, two furlongs and eighty yards.

2. A way twelve yards wide for cattle only from Yerradakatte to the stream of Bellarahalla for a distance of about one mile, one furlong and 160 yards.

3. A way twelve yards in width for cattle only from Ajjenahalli to the stream of Bellarahalla for a distance of one mile and forty yards.

4. The raiyats of Kumbarahalli, Hunusekatte and Pura villages are allowed to take their cattle for water by the demarcation line to Chikkathore.

5. A way to the undermentioned shrines will be admitted as follows for the use of worshippers and others :—

Name of shrine	Situation	Access to the shrine
Timmappanagudi	Situated on the top of Timmappanagudda.	By a foot-path branching from path No. 5 near the boundaries of Basavanahalli and Mailkebbe and runs for about two furlongs up to the shrine.
Suladahalli Ramappanagudi.	Situated in the deserted village of Suladahal in the midst of the forest.	By a foot-path branching from path No. 9 near Boranhal running for about two furlongs up to the shrine.

H. RAMIAH,
Dist. Forest Officer, Tumkur Dt.

Notification dated 20th April 1906.

It is hereby notified for general information that the following quantities of timber will be sold by public auction in the Depots of the Kadur District on the dates specified against each Depot, by the District Forest Officer of the Kadur District :—

No.	Name of Depot	Date of sale	Description	Cubical contents		Remarks
				No.	Cubic feet	
1	Kadur ...	23rd May 1906 ...	Matti logs	15	300	
			Teak poles	500	1,500	
			Honne rafters	600	1,500	
2	Tarikere ...	25th May 1906 ...	Teak logs	250	5,000	
			Teak poles	200	500	
			Matti logs	10	200	
			Nandi logs	72	1,900	
			Yettega logs	72	1,300	
			Teak sawn rafters and planks	4,000	4,200	
			Bite logs	58	1,230	
			Teak reepers	1,065	8,480 Rft.	More or less.
			Neralu	10	225	
			Matti rafters big and small	300	450	
3	Benkipur ...	28th May 1906 ...	Teak logs	200	4,000	
			Matti logs	100	200	
			Nandi logs	10	200	
			Yettega logs	26	1,026	
			Hunnal logs	29	780	
4	Shimoga ...	30th May 1906 ...	Nandi logs	10	200	
			Bite logs	8	220	
			Yettega logs	20	619	
			Hunnal logs	67	1,800	

N. B.—Terms of Sale.—Notification No. R. 15229—R. F. 155-92, dated the 15th March 1895, published in the *Mysore Gazette* No. 15, dated the 25th April 1895.

B. HEERASINGH,
Dt. Forest Officer, Kadur Dt.

Notification dated 26th April 1906.

It is hereby notified for information that the following quantities of timber will be sold by public auction in the Shimoga Depot on 28th May 1906, by the District Forest Officer or other officer deputed by him :—

No.—1.
Name of Depot—Shimoga.
Date of sale—28th May 1906.
Teak logs—25.
Nandi logs—100.
Other reserved logs—100.
Matti logs—150.
Other unreserved logs—100.
Teak poles—100.
Jambe poles—100.
Kendala poles—100.
Dindiga poles—100.
Teak rafters—576 C. ft.
Teak reepers—7,000 running feet.
Remarks—More or less.

TERMS OF SALE.—*Vide* Notification No. 15229—R. F. 155-92, dated 15th March 1895: any additional terms will be intimated before commencing the sale.

J. J. MONTEIRO, *Dt. Forest Officer, Shimoga.*

POLICE DEPARTMENT.

Descriptive roll of a man found dead on 29th March 1906, under a tree in the field of Kabballi Chandriah, situated by the side of the foot-path between Hangala and Devarahalli within the limits of the Gundlupet Taluk :—

Name—Not known.
Caste— Do
Residence—Do
Height—5 feet, 6 inches.
Age—About 60 years.
Complexion—Dark.
Descriptive marks—Round face ; had a tuft of hair on his head ; grey hairs on the head, chin, etc., Body, etc., emaciated.
Property found—A string containing bhadrashi and an idol named Manteswami made up of copper and silver round the neck.

Descriptive roll of a dead body found in Gundlupet Kasba on 28th February 1906 :—

Name—Munisawmy Pillay.
Caste—Vellal Wakkaliga.
Age—About 45 years.
Residence—Sultan bateri.
Height—5¼ feet.
Complexion—Dark, long face.
Property found—A small copper vessel (ಚೊಂಬು) ; a tin cup (ಟಿನ್).
Remarks—Died of fever.

MAHOMED JAFFER,
Supt. of Police, Mysore Dt.

A reward of Rs. 10 will be paid to any person or persons who will give information to the Assistant Superintendent of Police, Hassan District, leading to the arrest of the undermentioned accused who absconded after committing culpable homicide not amounting to murd under Section 304, Indian Penal Code, in Hosahalli village, Belur Taluk :—

(Crime No. 1—25 of 1905-06 of the Arkalgud Taluk, Hassan District.)

Name—Dyava.
Father's name—Hutchegowda.
Caste—Vakkaliga.
Height—About five feet.

Identification marks : —Complexion, oily red ; face oval and slightly pock-marked, body somewhat corpulnet, moustache just growing ; brows bear some scar marks ; wore a pair of gold ear-rings, a black check coat with brown stripes and white dhoti with red lines.

A reward of Rs. 10 will be paid to any person or persons who will give information to the Assistant Superintendent of Police, Hassan District, leading to the arrest of the undermentioned accused who absconded soon after committing culpable homicide not amounting to murder under Section 304, Indian Penal Code, in Bandahalli village, Belur Taluk, on the night of 5th December 1905.

(Crime No. 3—54 of 1905-06, of the Belur Taluk, Hassan District.)

Name—Hiraga.

Age—About 35 years.

Caste—Holeya.

Occupation—Was serving as a groom in one Puttappa Setty's Coffee Estate, near Bandahalli village, Belur Taluk.

Identification marks:—Complexion oily red, face elongated and slightly pock-marked.

GULAM MOHIDEEN KHAN,
Asst. Supt. of Police, Hassan Dist.

Descriptive list of one Thimmiah Gowda of Kurkalavani, a hamlet attached to Hebbe village, in the Yedahalli Sub-Taluk, missing about the 10th of January 1906:—

1. Name—Thimmiah Gowda.
2. Father's name —Puttiah Gowda.
3. Namathari—Vakkalu caste.
4. Occupation—Cultivation.
5. Age—27 years.

Height 5 feet 5 inches, bamboo color, thin man, has got a tuft of hair on the head. *Clothes, etc., worn by him.*—(1) White towel 6 cubits long and 2 cubits wide. (2) A vest made of black check cloth. (3) Black handkerchief. (4) Chota panche. (5) Two gold ear-rings in the right ear and one ear-ring in the left ear.

B. RAMASWAMAIYA, for *Dy. Comr., Kadur Dt.*

MISCELLANEOUS.

KOLAR DISTRICT.

Notice dated 25th April 1906.

It is hereby notified that the occupancy under the Land Revenue Code and Rules thereunder of the undermentioned land for cultivation will be sold by public auction at the time and place noted below, and the property will be knocked down to the highest bidder above upset price.

2. The highest bidder will be required to deposit immediately twenty-five per cent of the amount of his bid at the time of sale, and in default of such deposit, the property will be forthwith again put up and sold.

3. The full amount of the purchase money shall be paid by the purchaser before the sunset of the 15th day from that on which the sale of the land took place, or, if the said 15th day be an authorized holiday, then, before the sunset of the first office day after such 15th day.

4. In default of payment within the prescribed period of the full amount of purchase money, the deposit, after defraying thereout the expense of the sale, shall be forfeited to Government, and the property shall be re-sold, and the defaulting purchaser shall forfeit all claim to the property or to any part of the sum for which it may be subsequently sold, provided that in any case in which the enforcement of this condition may devolve undue hardship, it shall be competent to the Deputy Commissioner to submit the necessary recommendation for the orders of Government. If the proceeds of the sale which is eventually made, be less than the price bid by such defaulting purchaser, the difference shall be recoverable from him by the Deputy Commissioner as an arrear of land revenue.

5. The sale is subject to the confirmation of the Deputy Commissioner, unless the sale proceeds are below Rs. 50, in which case the Amildar is competent to confirm the sale after the expiry of ten days.

6. Persons bidding at a sale may be required to state whether they bid on their own account or as agents, and in the latter case to deposit a written authority signed by their principals; otherwise their bids may be rejected.

7. When the sale has been confirmed and the purchase money has been fully paid up, the purchaser will receive from the Amildar a written permission (Saguvali chit) to occupy the land (Form No. 2, Appendix D to the Rules under the Land Revenue Code).

8. Such permissions granted by the Amildar are to be considered conditional, pending the disposal of all appeals, if any, under Chapter XIII of the Land Revenue Code.

Taluk	Hobli	Village	Description of property					Place, date and hour of sale	By whom the sale is to be conducted	Upset price, if any, and other remarks
			Land				Trees, wells, etc., approximate particulars			
			Survey No.	Dry, wet, garden or coffee	Area	Assessment				
1	2	3	4	5	6	7	8	9	10	11
Chikballapur	Kasaba	Gurkalnagenahalli			A. g.	Rs. a. p.		Place of sale. Near the lands in the village. Date of sale 28th May 1906; from 11 A.M.	Hobli Shekdar or Amildar.	
			28	Dry	0 10	0 8 0				
				Wet	1 36	12 8 0				
			36	Dry	0 24	1 0 0				
				Wet	1 26	10 0 0				
			38	do	2 13	15 0 0				
			93	do	1 7	7 8 0				
			94	do	2 27	17 0 0				
			95	do	1 19	10 0 0				
			96	do	1 33	12 0 0				
			97	do	1 34	12 0 0				
			98	Dry	1 33	3 0 0				
				Wet	0 10	1 8 0				
			99	Dry	0 38	1 8 0				
				Wet	1 7	7 8 0				
			100	Dry	1 20	2 8 0				
				Wet	0 38	6 0 0				
			101	do	1 31	12 0 0				
			102	do	1 25	11 0 0				
			103	do	2 34	20 0 0				
			105	do	2 13	15 0 0				
			106	Dry	0 18	0 12 0				
				Wet	0 31	4 12 0				
					32 7	183 0 0				

N. B.—These lands are irrigable by the water of the Srinivasasagara tank.

T. K. SUNDARARAJIENGAR,
for *Ag. Dy. Comr.*

IN THE COURT OF THE ASSISTANT COMMISSIONER AND 1ST CLASS MAGISTRATE, KOLAR GOLD FIELDS.

Notice dated 19th April 1906.

Police Property Form No. 31, *dated* 10*th March* 1906, *of Champion Station, A. Division.*

Notice is hereby given that the marginally noted properties produced by the Champion Police, will be confiscated and sold for Government, if not claimed within six months.

1. Cash annas 15.
2. A piece of candle.
3. Some playing cards.
4. A cumbli piece.
5. A gunny bag piece.

Notice dated 19th April 1906.

Police Property Form No. 10, *dated* 31*st March* 1906, *of Ooregum Station, B. Division.*

Notice is hereby given that the marginally noted property produced by the Ooregum Police, will be sold by public auction, if not claimed within six months from the date of this notice.

A gold scarp pin.

R. B. PLUMER,
Asst. Comr. & 1st Class Magte.

MYSORE DISTRICT.

Notification dated 25th April 1906.

It is hereby notified that in satisfaction of arrears of land revenue due by Krishnappa, Naranappa, Jodidars of Jodi Chamalapura village, Yedatore Taluk, revenue defaulters, the undermentioned immovable property will be sold by public auction at the village of Jodi Chamalapura in the taluk of Yedatore in the Mysore District, on the 8th June 1906. The sale will commence at 11 A.M. and the property will be knocked down to the highest bidder without reserve. The sale will be conducted by the Assistant Commissioner in charge of the Hunsur group of Taluks.

2. The amount of revenue payable by the purchaser on the property for the whole of the year 1905-06 is Rs. 1,121-4-3, as shown in detail in the statement at foot.

3. Purchasers will be required to deposit twenty-five per cent of the purchase money at the time of sale, and where the remainder of the purchase money may not be paid within fifteen days from the date of sale, the money so deposited shall be liable to forfeiture.

4. When such deposit shall not be made nor the remaining purchase money paid up, the property shall be re-sold at the expense and risk of the first purchaser.

5. The sale shall be stayed, if the defaulter or any person acting on his behalf or claiming an interest in the property, tenders the full amount of the arrears of revenue with the interest and other charges, provided such tender be made before the property is knocked down.

6. The sale of the property will not become absolute until the sale has been confirmed by the Deputy Commissioner or by some other officer duly authorized to confirm the same.

7. Purchasers having completed the payment of the purchase money will, as soon as the sale has been confirmed by the Deputy Commissioner, be placed in immediate possession and the property will be registered in the name of the purchaser and a certificate of sale, signed and sealed by the Deputy Commissioner will be granted to him. It is to be distinctly understood that the Government are not responsible for errors of description or in estimated extent.

8. Provided parties deeming themselves aggrieved by the sale shall be at liberty to appeal to the Deputy Commissioner within thirty days from the date of sale, and also to appeal to Government against his order within the time prescribed by law and the purchase shall be conditional on the final order in such appeal.

SCHEDULE.

Taluk	Hobli	Village	Names of defaulters	Description of property							Amount of arrears due to Government including notice fees, etc.
				Buildings		Land					
				Name of building	Estimated value	Number or name of land	Dry, wet or garden	Area		Assessment	
								A.	g.	Rs. a. p.	Rs. a. p.
Yedatore	Kasaba	Jodi Chamalapura	Krishnappa—Naranappa	...	...	...	Peramboke.	40	33	0 12 0	1,120 4 3
							Garden.	2	6	6 0 0	Notice fee... 1 0 0
							Dry ...	400	2	267 12 0	Total ... 1,121 4 3
							Wet ...	2	21	15 0 0	
				Entire village. *Boundaries.* On the east—Borders of Subbapanditara Koppalu and Thippur villages. Do west—Borders of Kaggere and Thippur. Do south—Borders of Bannikuppe and Kamenahalli villages. Do north—Borders of Thippur and Jodi Subbapanditara Koppalu.							

H. H. SPARKES,
Ly. Comr.

Notification dated 24th April 1906.

1. The right to collect tolls at the toll-gate on Yedatore bridge, Yedatore Taluk, from the 1st July 1906 to the 30th June 1907, will be sold by public auction in the Yedatore Taluk Cutcherry, by the Deputy Commissioner or any other officer deputed for the purpose, on the 24th May 1906.

2. The contractors who purchase the right must collect tolls at the rates mentioned in the schedule both on in-coming and out-going traffic and at no higher rates.

3. The Deputy Commissioner reserves to himself the power of refusing or accepting the highest or any bid that may be offered.

4. The contract amount is payable in twelve equal monthly instalments due on or before the 10th of the following month. The contractor shall pay, as soon as the sale is over, a deposit equal to two monthly instalments for the due performance of the contract. The amount in deposit will, if the conditions of the contract are complied with, be credited towards the instalments due for the last two months of the contract.

5. If the deposit is not made immediately after the close of the sale, the contract will be re-sold at the risk of the approved bidder. If default is made in the payment of the instalments, interest at one pie per rupee per month will be levied till the date of payment, and the unexpired portion of the contract will also be liable to be sold at the descretion of the Deputy Commissioner, and the deficit will be recovered from the contractor, who shall not be entitled to the profits, if any.

6. In addition to the amount bid for, the contractors are, subject to the conditions stated in paras 4 and 5, bound to pay local cess at one anna per rupee on the contract amount paid into the Treasury.

7. The contractors are also bound to keep an account showing the daily collections, and it shall be open to inspection by the Taluk and District authorities.

8. They shall also be bound to keep true accounts of traffic passing through the gates, as specified in para 7, for which purpose they shall bind themselves to maintain at their own cost a resident mutsaddi at each toll-gate.

9. The contractors will have the use of existing toll-houses and gates, and they will be required to keep them in good repair. If any toll-gates or houses are now required, they will be put up at Government expense.

10. The contractor should conform generally to the rules published in the late Chief Commissioner's Notification No. 274, dated 4th November 1876, in the matter of ghat tolls.

11. Carts laden with bone or other substance for use as manure, should be treated as carts unladen and tolled on accordingly.

Revised schedule of rates to be levied at the toll-gate on the Yedatore bridge in the Mysore District, as per Government Order Nos. 944-6—L. F. 57-98 and 1588—L. F. 57-98, dated 24th July 1899 and 1st August 1899, respectively.

No.	Particulars	Revised rates as per Government Order Nos. 944-6—L. F. 57-98 and 1588—L. F. 57-98, dated 24th July 1899 and 1st August 1899, respectively	
		Laden	Unladen
		Rs. a. p.	Rs. a. p.
1	On every four-wheeled carriage	0 8 0	0 4 0
2	Do two-wheeled carriage or cart	0 4 0	0 2 0
3	Do buffalo or bullock, if laden	0 0 6	.....
4	Do do if not laden	.....	.....
5	Do elephant	1 0 0	1 0 0
6	Do camel, if laden	0 8 0	.....
7	Do do if not laden	.....	0 8 0
8	Do horse, if laden or ridden	0 1 0	.....
9	Do do if unladen or led	.....	0 1 0
10	Do ass, if laden or ridden	0 0 6	.....

Notification dated 24th April 1906.

1. The right to collect tolls at the toll-gates specified in Schedule A, from the 1st July 1906 to the 30th June 1907, will be sold by public auction at the places noted opposite to each, by the Deputy Commissioner or any other officer deputed for the purpose, on the dates noted therein.

2. The contractors who purchase the right must collect tolls at the rates mentioned in Schedule B, both on in-coming and out-going traffic and at no higher rates.

3. The Deputy Commissioner reserves to himself the power of refusing or accepting the highest or any bid that may be offered.

4. The contract amount is payable in twelve equal monthly instalments due on or before the 10th of the following month. The contractor shall pay, as soon as the sale is over, a deposit equal to two monthly instalments for the due performance of the contract. The amount in deposit will, if the conditions of the contract are complied with, be credited towards the instalments due for the last two months of the contract.

5. If the deposit is not made immediately after the close of the sale, the contract will be re-sold at the risk of the approved bidder. If default is made in the payment of the instalments, interest at one pie per rupee per month will be levied till the date of payment, and the unexpired portion of the contract will also be liable to be sold at the discretion of the Deputy Commissioner, and the deficit will be recovered from the contractor, who shall not be entitled to the profits, if any.

6. In addition to the amount bid for, the contractors are, subject to the conditions stated in paras 4 and 5, bound to pay local cess at one anna per rupee on the contract amount paid into the Treasury.

7. The contractors are also bound to keep an account showing the daily collections, and it shall be open to inspection by the Taluk and District authorities.

8. They shall also be bound to keep true accounts of traffic passing through the gates as specified in para 7, for which purpose they shall bind themselves to maintain at their own cost a resident mutsaddi at each toll-gate.

9. The contractors will have the use of existing toll-houses and gates, and they will be required to keep them in good repair. If any toll-gates or houses are now required, they will be put up at Government expense.

10. The contractor should conform generally to the rules published in the late Chief Commissioner's Notification No. 274, dated 4th November 1876, in the matter of ghat tolls.

11. Carts laden with bone or other substance for use as manure should be treated as carts unladen and tolled on accordingly.

SCHEDULE A.

Roads	Stations	Place of sale	Date of sale
Bangalore-Mangalore road, Siddapur branch road.	At the junction of two roads to the west of Periyapatam Fort.	Hunsur Taluk Cutcherry.	25th May 1906.
Hassan-Periyapatam-Cannanore road.	Between Ankanahalli and Periyapatam.		
Madras-Cannanore road ...	Punchavalli		
Mysore-Manantoddy road ...	Kollegowdanahalli.	Heggaddevankote Taluk Cutcherry.	26th May 1906.
Gundlupet-Sultan Battery road ...	Mulehole ...	Gundlupet Taluk Cutcherry.	23rd May 1906.
Bangalore-Nilgiri road ...	Bandipur ...		
Nanjangud-Hasanur Ghat road ...	1st furlong of the 131st mile.	Chamrajnagar Taluk Cutcherry.	28th May 1906.

SCHEDULE B—*Rates.*

Traffic	Rates			Remarks
	Rs.	a.	p.	
Four-wheeled carriage with passengers	0	12	0	
Do without passengers	0	6	0	
Two-wheeled carriage with passengers	0	8	0	
Do without passengers	0	4	0	
Carts, laden	0	4	0	
Do unladen	0	2	0	
Elephants	1	0	0	
Camels	0	4	0	
Horses with rider	0	1	6	
Do without rider	0	0	9	
Ponies with rider	0	0	9	
Do without rider	0	0	6	
Bullocks, laden	0	1	0	
Do unladen	0	0	6	
Asses, laden	0	0	6	
Do unladen	0	0	3	
Palanquins	0	4	0	
Sheep, goat or pig	0	0	1	

Notification dated 24th April 1906.

1. The right of collecting fees at the market at Terakanambi in the Gundlupet Taluk, from the 1st July 1906 to the 30th June 1907, will be sold by the Assistant Commissioner of the Nanjangud Division by public auction at the Police Station at Terakanambi on the 24th May 1906.

2. The successful purchaser must collect fees only at the rates noted in the annexed schedule and at no higher rates and only on the articles that would be brought on Sante days within the market premises, the boundary of which will be distinctly marked out by the Assistant Commissioner of the Nanjangud Division.

3. The Deputy Commissioner reserves to himself the power of refusing the highest or any bid that may be offered without assigning any reason therefor.

4. The contract amount is payable in twelve monthly instalments due on or before the 10th of the following month. The contractor shall pay, as soon as the sale is over, a deposit equal to two months' instalments for the due performance of the contract. The amount in deposit will, if the conditions of the contract are complied with, be credited towards the instalments due for the last two months of the contract.

5. If the deposit is not made immediately after the close of the sale, the contract will be re-sold at the risk of first purchaser. If default is made in payment of the instalment, interest at one pie per rupee per month will be levied on the amount due till the date of payment, and the unexpired portion of the contract will also be liable to be sold again at the discretion of the Deputy Commissioner and the deficit will be recovered from the contractor, who shall not be entitled to the profits, if any.

6. The contractor is also bound to keep an account showing in detail, the daily collection and it shall be open to inspection by the Taluk and District authorities.

7. Any breach of the above rules on the part of the contractor or his servants being observed, the contract will be liable to cancellation.

Schedule of fees.

		Rs.	a.	p.
1.	Ordinary cart	0	2	0
2.	Waddar cart	0	1	0
3.	Pack bullock	0	0	6
4.	Head load	0	0	3

Notification dated 24th April 1906.

1. The right of collecting fees at the market at Santemarahalli in the Chamrajnagar Taluk, from the 1st July 1906 to the 30th June 1907, will be sold by the Amildar of the said taluk, by public auction, at the Police Station at Santemarahalli on the 29th May 1906.

2. The successful purchaser must collect fees only at the rates noted in the annexed schedule, and at no higher rate, and only on the articles that would be brought on Sante days within the market premises, the boundary of which will be distinctly marked out by the Amildar.

3. The Deputy Commissioner reserves to himself the power of refusing the highest or any bid that may be offered, without assigning any reason therefor.

4. The contract amount is payable in twelve monthly instalments due on or before the 10th of the following month. The contractor shall pay as soon as the sale is over, a deposit equal to two months' instalment for the due performance of the contract. The amount in deposit will, if the conditions of the contract are complied with, be credited towards the instalments due for the last two months of the contract.

5 If the deposit is not made immediately after the close of the sale, the contract will be re-sold at the risk of the first purchaser. If default is made in the payment of the instalment, interest at one pie per rupee per month will be levied on the amount due till the date of payment, and the unexpired portion of the contract will also be liable to be sold again at the discretion of the Deputy Commissioner, and the deficit will be recovered from the contractor, who shall not be entitled to the profits, if any.

6. The contractor is also bound to keep an account showing in detail the daily collections, and it shall be open to inspection by the taluk and district authorities.

7. Any breach of the above rules on the part of the contractor or his servants being observed, the contract will be liable to cancellation.

Schedule of Fees.

1	Shop or Malige (will be separately sold).	
2	Tent or godown	Four annas each.
3	Bullock bandy	Two do
4	Waddar cart	One anna each.
5	Bullock load	Six pies each.
6	Head load	Three pies each.

N.B.—The fees on the last four items should be levied at the entrance of the market, and on the second item when the tent is pitched.

H. H. SPARKES,
President, Dist. Board, Mysore.

Abstract Notification dated 6th April 1906.

It is hereby notified that Jodi Dodda Somanahalli village, Santhe Bachahalli Hobli, Krishnarajpete Taluk, will be sold by public auction in the Office of the Amildar of the Taluk on the 1st June 1906 on account of arrears of revenue due to Government.

For further particulars see page 662—663 of part II of *Mysore Gazette* No. 17, dated 26th April 1906.

Abstract Notification dated 7th April 1906.

It is hereby notified that Jodi Somanathapura, Sosale Hobli, T.-Narsipur Taluk, will be sold by public auction in the Office of the Amildar of the Taluk on the 5th June 1906 on account of arrears of revenue due to Government.

For further particulars see page 663—664 of part II of *Mysore Gazette* No. 17, dated 26th April 1906.

N. VENKATA RAO, *In charge Dy. Comr.*

HASSAN DISTRICT.

Notification dated 11th April 1906.

The levy of toll on the Hassan-Arsikere road in the Hassan District, having been sanctioned by Government in Proceedings No. 9511-50—L. B. (305-05)-2, dated 16th March 1906, the public are hereby informed that from and after the 1st May 1906, toll-gates will be established, one near the junction of the Tiptur-Dudda road with the Hassan-Arsikere road and another on the Hassan side of Dudda.

1. Until the 1st July 1906, only half the rates as specified in the appended schedule will be levied on carts, etc., passing along the road.

2. Only one toll shall be levied at either of the two gates on any cart, etc., passing along the road, if within a period of twenty-four hours, *viz.*, from sunrise to sunrise.

3. No tolls shall be levied for the passage of carriages, carts or animals (*vide* Section 65 of the Local Boards Rules)—

(*a*) belonging to Local Boards,

(*b*) conveying District Fund servants on duty, or property in the custody of such servants,

(*c*) licensed by the District Board, during the period for which they have been licensed, or

(*d*) engaged by the Postal Department to convey mails. Mail tongas carrying passengers in addition to mails, are exempted from payment of tolls. (*Vide* Government Proceedings No. 9079-86—L. B. (315-05)-2, dated 5th March 1906.)

(*e*) No toll shall be paid to the passage of troops, or Military stores, or equipages, or of any Police or other Government officers on duty, or on passage of any property *bonâ fide* belonging to Government, as established by the production of a certificate from the Head of the Department to which it belongs.

4. A table of the authorized tolls shall be legibly written in English and in Kannada and shall be put up in a conspicuous place near the toll-gate.

5. Tolls shall be collected at the toll-gates only.

6. Any person who fraudulently or forcibly passes any toll-bar, without paying the proper toll, or who obstructs the toll-collector in the discharge of his duties, shall be liable on conviction before a Magistrate, to simple or rigorous imprisonment for any term not exceeding three months, or to a fine not exceeding 50 rupees.

7. When payment of any toll is made, a receipt shall be granted by the person to whom the payment is made in such form as the District Board may, from time to time, prescribe.

8. In all cases of resistance to the lawful authority of the toll-collectors appointed under these rules, all Police Officers shall assist the toll-collectors, when required, and for that purpose shall have the same power which they have in the execution of their ordinary Police duties.

SCHEDULE.

Particulars.	Rate.		
On every four-wheeled carriage	2	0	0
Do two-wheeled carriage	1	0	0
Do Ekka	0	4	0
Do hackney on springs	0	2	0
Do cart and hackney not on springs drawn by eight bullocks, buffaloes, horses, ponies, asses, or mules, if laden	1	8	0
Do do if not laden	0	8	0
On every cart and hackney drawn by six bullocks, buffaloes, horses, ponies, asses, or mules, if laden	0	12	0
Do do if not laden	0	6	0
Do cart and hackney drawn by four bullocks, buffaloes, horses, ponies, asses, or mules, if laden	0	8	0
Do do if not laden	0	4	0
Do cart and hackney drawn by two bullocks, buffaloes, horses, ponies, asses, or mules, if laden	0	4	0
Do do if not laden	0	2	0
Buffaloes or bullocks per head, if laden	0	1	0
Do if not laden	0	0	6
On every elephant	1	8	0
Do camel, if laden	0	8	0
Do camel, if not laden	0	4	0
On every horse, if laden or ridden	0	1	6
Do horse, if unladen or led	0	0	9
Do tattu or mule, if laden or ridden	0	0	9
Do do unladen or led	0	0	6
Do ass, if laden or ridden	0	0	6
Do ass, unladen or led	0	0	3
Do sheep or goat or pig	0	0	1
Do palanquin, dooly, palna or tonjon with 8 bearers	1	0	0
Do do with 6 do	0	12	0
Do do with 4 do	0	8	0
Do do with 2 do	0	4	0

N. B.—No toll to be levied from foot-passengers. Animals drawing any vehicle for which toll can be demanded, are not to be also charged with toll.

P. R. W. WETHERALL,

President.

SHIMOGA DISTRICT.

Notification dated 12th April 1906.

Under the authority of Rule XII of the Government Notification No. 245—1300, dated 2nd October 1901, it is hereby notified for the information of the public that the Range Forest Officers are empowered to issue paid licenses for felling and transport of timber, bamboos and firewood from the District Forests (unreserved lands) of the Shimoga District:—

No.	Name of officer	Powers	Locality where the powers are to be exercised
1	Range Forest Officers	Power to issue paid licenses for the felling and removal of— 1. Timber of unreserved species. 2. Bamboos. 3. Dry firewood.	In the maidan tracts within their ranges.

All the Revenue, Forest and Police Officers are hereby authorized to check the transport of timber, bamboos and firewood in transit.

Notification dated 26th April 1906.

The right to collect toll at the toll gate at Agumbe ghat in the Tirthahalli Taluk, from 1st July 1906 to 30th June 1907, will be sold by public auction in the Taluk Cutcherry at Tirthahalli by the Deputy Commissioner or the Assistant Commissioner deputed for the purpose, on the 23rd May 1906 and that of collecting the same at Hyderghar ghat and at Lakshmipur in the Nagar Taluk, in the Taluk Cutcherry at Kallurkatte on the 26th May 1906, by the Assistant Commissioner of Sagar.

2. The contractor who purchases the right can collect tolls at the rates mentioned in the accompanying schedule and no higher rates are leviable by him. He should conform himself to the rules published with the late Chief Commissioner's Notification No. 274, dated 4th November 1876. Government property and Government servants travelling on duty are exempted from the tolls.

3. The Deputy Commissioner reserves to himself the power of refusing or accepting the highest bid or any bid that may be offered.

4. The contract amount should be collected from the person whose bid is accepted in eight equal instalments, two of which will be paid at once as deposit and appropriated toward the last two instalments and the remaining six instalments will be paid monthly by the 20th of every month commencing from the 20th December 1906. He shall also furnish security for the regular payment of the monthly instalments.

5. If the deposit is not made and security is not furnished immediately after the close of the sale, the contract will be re-sold at the risk of the approved bidder. If default is made in the payment of instalments, interest at one pie per rupee per month will be levied till the date of payment and the contract will also be leviable to be sold again at the discretion of the Deputy Commissioner and the deficit, if any, will be recovered from the contractor or surety.

6. In addition to the amount bid for the contractor is subject to the conditions stated in paras 4 and 5 and bound to pay local cess at one anna per rupee of the contract amount paid into the Treasury.

7. The contractor is also bound to keep an account showing the daily collections and it shall be open to inspection by the Taluk and District authorities.

8. The contractor will have the use of Ghat toll-house and gate and he will be required to keep them in good repair.

Schedule of rates.

		Rs.	a.	p.
1.	On every four-wheeled carriage	2	0	0
2.	Do two wheeled carriage	1	0	0
3.	Do Ekka	0	4	0
4.	Do hackney on springs	0	2	0
5.	Do cart and hackney not on springs drawn by bullocks, buffaloes and horses	1	8	0
6.	Do do if not laden	0	8	0
7.	Do do drawn by 6 bullock, etc., if laden ...	0	12	0
8.	Do do if not laden	0	6	0

			Rs.	a.	p.
9.	On every cart and hackney not on springs drawn by 4 bullocks, etc., if laden	...	0	8	0
10.	Do do if not laden ...	...	0	4	0
11.	Do do 2 bullocks, etc., if laden	...	0	4	0
12.	Do do if not laden ...	...	0	2	0
13.	Do do one buffalo or bullock, if laden	...	0	1	0
14.	Do do if not laden ...	...	0	0	3
15.	Do elephant	...	1	8	3
16.	Do camel, if laden ...	...	0	8	0
17.	Do do if not laden ...	...	0	4	0
18.	Do horse, if laden or ridden ...	...	0	1	6
19.	Do do if unladen or led ...	...	0	0	9
20.	Do tattu or mule if laden or ridden	...	0	0	9
21.	Do do if unladen or led ...	...	0	0	6
22.	Do ass, if laden or ridden	...	0	0	6
23.	Do do if unladen or led ...	...	0	0	1
24.	Do sheep, goat or pig	...	0	0	1
25.	Palanquin, dholi or tonjon with 8 bearers ...	...	1	0	0
26.	Do do 6 do ...	...	0	12	0
27.	Do do 4 do ...	...	0	8	0
28.	Do do 2 do ..	...	0	4	0

N. B.—No tolls will be levied on foot passengers.

M. S. NARAYANA RAO, *Dy. Comr.*

KADUR DISTRICT.

Notice.

Notice is hereby given that a sum of Rs. 2-8-0, being the value of a kit box due to the deceased Shankarappa who was Lance Dafadar No. 84 of the Tarikere Taluk, will be forfeited to Government, if not claimed by his heirs within three months from this date. Persons having any claim thereto may apply for the amount to the undersigned within the time allowed.

Notification dated 21st April 1906.

Under para 5 of Government Notification No. 9007—Leg. 56, dated Bangalore 11th December 1901, it is hereby declared that fishing in the rivers Tunga and Bhadra running through the Kadur District is prohibited, during the season from 1st April up to 30th September 1906.

V. KRISHNA RAO,
for *Dy. Comr.*

CHITALDRUG DISTRICT.

Abstract Notification dated 11th April 1906.

It is hereby notified for general information that the right of collecting tolls on the Harihar Bridge in the Chitaldrug District for one year from 1st July 1906 to 30th June 1907, will be sold by public auction in the Deputy Amildar's office at Harihar on the 29th May 1906 by the Deputy Commissioner or an Assistant Commissioner deputed by him for the purpose.

For further particulars, see original notification published at page 619 of the *Mysore Gazette* dated 19th April 1906.

B. BHIMA RAO,
for *Dy. Comr.*

TUMKUR DIVISION.

Notification dated 10th April 1906.

Rupees seven being arrears due to B. Ganganna, contractor for restoring Thadasur tank, but not for A. R. of Bangalore, Honnavar road, as published in notification, dated 30th January 1906, has been outstanding in the accounts of this office since June 1905. It is hereby notified that if the party does not present himself for payment within one month from date of publication of this notification, the amount will be credited to Government as unclaimed deposits.

C. MADAVA RAO, *Executive Engineer.*

BANGALORE CITY MUNICIPALITY.

PROCEEDINGS OF AN ADJOURNED ORDINARY MEETING OF THE MUNICIPAL COMMISSIONERS FOR THE CITY OF BANGALORE, HELD AT THEIR OFFICE PREMISES AT 5-30 P.M., ON SATURDAY THE 31ST MARCH 1906.

President—Present.

Ex-Officio Members.

Absent—The Senior Surgeon and Sanitary Comr. with the Govt. of Mysore.
Present—The Executive Engr., Bangalore Dn.
Absent—The Principal, Central College.
Present—The Amildar, Bangalore Taluk.

Municipal Commissioners.

Absent—C. Krishna Murti, Esq.

I—Palace Division.
Absent—I. Bronson, Esq.
Present—Aga Abdulla Saheb, Esq.

II—Bale Pete Division.
Present—B. Gangiah, Esq.
Absent—D. Venkataramaiya, Esq., B.A.

III—Manavarte Pete Division.
Present—Veerabhadra Chetty, Esq.
Absent—B. K. Garudachar, Esq.

IV—Alsur Pete Division.
Present—Boppannanavara Basanna, Esq.
Absent—N. Ramabhadraiya, Esq.

V—Nagarth Pete Division.
Present—B. V. Ramaswami Chetty, Esq., B.A.
Do —B. Oosman Khan, Esq.

VI—Lal-Bagh Division.
Absent—J. Cameron, Esq., F.L.S.
Present—D. B. Ramachendra Mudaliar, Esq.

VII—Fort Division.
Absent—B. Appajappa, Esq.
Present—J. W. Hardy, Esq.

VIII—Basavangudi Division.
Present—M. K. Krishna Murti Rao, Esq.
Do —Khader Mohadin Meccai, Esq.

IX—Malleswaram Division.
Present—S. Venkatarangaiengar, Esq.
Absent—P. R. Subramanya Sastri, Esq., B.A.

1. Read draft budget estimates for 1906-07 with Sub-Committee's report.
Resolution.—Passed, pending increase in the provision under 'Conservancy' by Rs. 2,000.

PROCEEDINGS OF AN ORDINARY MEETING OF THE MUNICIPAL COMMISSIONERS FOR THE CITY OF BANGALORE, HELD AT THEIR OFFICE PREMISES AT 7-30 A.M., ON THURSDAY THE 29TH MARCH 1906.

President—Present.

Ex-Officio Members.

Absent—The Senior Surgeon and Sanitary Comr. with the Govt. of Mysore.
Do —The Executive Engr., Bangalore Dn.
Absent—The Principal, Central College.
Do —The Amildar, Bangalore Taluk.

Municipal Commissioners.

Absent—C. Krishna Murti, Esq.

I—Palace Division.
Present—I. Bronson, Esq.
Do —Aga Abdulla Saheb, Esq.

II—Bale Pete Division.
Absent—B. Gangiah, Esq.
Do —D. Venkataramaiya, Esq., B.A.

III—Manavarte Pete Division.
Absent—Veerabhadra Chetty, Esq.
Present—B. K. Garudachar, Esq.

IV—Alsur Pete Division.
Absent—Boppannanavara Basanna, Esq.
Present—N. Ramabhadraiya, Esq.

V—Nagarth Pete Division.
Present—B. V. Ramaswami Chetty, Esq., B.A.
Do —B. Oosman Khan, Esq.

VI—Lal-Bagh Division.
Absent—J. Cameron, Esq., F.L.S.
Present—D. B. Ramachendra Mudaliar, Esq.

VII—Fort Division.
Absent—B. Appajappa, Esq.
Do —J. W. Hardy, Esq.

VIII—Basavangudi Division.
Present—M. K. Krishna Murti Rao, Esq.
Absent—Khader Mohadin Meccai, Esq.

IX—Malleswaram Division.
Absent—S. Venkatarangaiengar, Esq.
Present—P. R. Subramanya Sastri, Esq., B.A.

1. Cash Account Current, Demand, Collection and Balance Statements, with Comptroller's audited accounts for November and December 1905, Mortuary return, Progress report of works, Memo of visitors to the Srinivasa Mandiram Library, City Municipal English and Kannada Schools returns, Maternity return, and Statement of rewards for the destruction of dogs for February 1906.
Resolution.—Passed.

RECEIPTS FOR

Items	DEMAND				
	Arrears as stood on 1st July 1905	For the year 1905-06.			Total including arrears
		For previous months	For the month of Feb. 1906	Total	
	Rs. a. p.	Rs. a. p.	Rs. a. p.	Rs. a. p.	Rs. a. p.
I. Octroi—					
(1) Timber	...	4,832 1 8	526 13 6	5,358 15 2	5,358 15 2
(2) Tobacco	...	5,600 6 10	804 9 11	6,405 0 9	6,405 0 9
(3) Betel-leaves	...	3,931 10 1	587 12 10	4,519 6 11	4,519 6 11
(4) Fresh cocoanuts	...	3,766 15 0	446 4 8	4,213 3 8	4,213 3 8
(5) Dry cocoanuts	..	980 0 0	39 15 3	1,019 15 3	1,019 15 3
(6) Piece-goods	...	15,327 1 8	2,341 4 4	17,668 6 0	17,668 6 0
(7) Mangalore tiles	...	84 5 10	1 0 2	85 6 0	85 6 0
(8) Sugar	...	2,090 10 11	296 6 4	2,387 1 3	2,387 1 3
(9) Horse-gram	...	1,055 11 8	356 13 5	1,412 11 1	1,412 11 1
(10) Oats	...	2 5 7	0 2 5	2 8 0	2 8 0
(11) Bran		44 6 10	1 10 9	46 1 7	46 1 7
(12) Chaff	...	4 5 5	0 8 10	4 14 3	4 14 3
(13) Storage fees	...	25 1 7	25 6 6	50 8 1	50 8 1
(14) Rahadari fees	...	127 12 0	20 9 0	148 5 0	148 5 0
(15) Tobacco licenses	.	515 0 0	27 0 0	542 0 0	542 0 0
Total, Octroi ...	...	38,387 15 1	5,476 7 11	43,864 7 0	43,864 7 0
II. Taxes on houses, lands, &c.—					
House tax	47,261 0 1	76 1 2	813 2 0	889 3 2	48,150 3 3
Lighting tax	11,606 10 11	55 15 4	372 11 3	428 10 7	12,035 5 6
Water tax	18,293 5 5	101 9 4	1,271 10 8	1,373 4 0	19,666 9 5
Total, Taxes ...	77,161 0 5	233 9 10	2,457 7 11	2,691 1 9	79,852 2 2
II. License Receipts—					
(a) Liquor licenses	3,726 0 4	9,176 8 0	1,166 8 0	10,343 0 0	14,069 0 4
(b) Other licenses	596 1 4	11,584 8 10	891 0 0	12,475 8 10	13,071 10 2
Total, License Receipts ...	4,322 1 8	20,761 0 10	2,057 8 0	22,818 8 10	27,140 10 6
VII. Other Taxes—Mohatarfa—					
(a) Shop-tax	29,042 1 8	406 0 0	150 6 8	556 6 8	29,598 8 4
(b) Loom tax	162 15 9	...	...	...	162 15 9
(c) Oil-mill tax	898 8 4	..	...	...	898 8 4
(d) Cart tax	265 0 0	..	.	...	265 0 0
Total, Mohatarfa ...	30,368 9 9	406 0 0	150 6 8	556 6 8	30,925 0 5
VIII. Rents from—					
(a) Market contract fees ...	45 0 0	2,275 0 0	325 0 0	2,600 0 0	2,645 0 0
(b) Market rents	132 0 5	2,838 4 0	448 13 0	3,287 1 0	3,419 1 5
(c) Land rents	464 0 0	743 7 1	228 8 10	971 15 11	1,435 15 11
Total Rents ...	641 0 5	5,856 11 1	1,002 5 10	6,859 0 11	7,500 1 4
IX. Fines	...		1 0 0	1 0 0	1 0 0
X. Miscellaneous—					
(a) Sale of lands	...	1,563 7 6	281 0 0	1,844 7 6	1,844 7 6
(b) Refunds	...	6 13 0	5 4 5	12 1 5	12 1 5
(c) Pounds	...	117 3 0	10 8 0	127 11 0	127 11 0
(d) Land revenue	..	...	979 0 3	979 0 3	979 0 3
(e) English School fees	...	2,590 12 0	480 6 0	3,071 2 0	3,071 2 0
(f) Kannada Boys' School fees ...	...	152 4 6	55 1 6	207 6 0	207 6 0
(g) Sale of manure	1,147 4 0	2,483 0 0	144 0 0	2,627 0 0	3,774 4 0
(h) Scavenging fees	5,353 3 5	2,157 14 11	352 1 6	2,510 0 5	7,863 3 10
(i) Notice and warrant fees ...	...	476 4 4	42 14 7	519 2 11	519 2 11
(j) Chattram feeding charges ...	...	466 10 8	66 10 8	533 5 4	533 5 4
(k) Other contributions	...	1,000 0 0	...	1,000 0 0	1,000 0 0
(l) Sale of grass	27 0 0	442 0 0	15 0 0	457 0 0	484 0 0
(m) Other items	99 0 0	639 11 0	138 10 8	778 5 8	877 5 8
Total, Miscellaneous ...	6,626 7 5	12,096 0 11	2,570 9 7	14,666 10 6	21,293 1 11
Payments to Municipal licenses rendered to private parties	...	591 4 6	153 0 0	744 4 6	744 4 6
Deposits	..	1,482 3 2	230 0 0	1,712 3 2	1,712 3 2
Advances recovered	...	152 13 6	...	152 13 6	152 13 6
Collection of tolls	4,522 14 11	16,161 4 0	2,308 7 9	18,469 11 9	22,992 10 8
Total ...	4,522 14 11	18,387 9 2	2,691 7 9	21,079 0 11	25,601 15 10
Grand Total ...	1,23,642 2 7	96,129 14 11	16,407 5 8	1,12,536 4 7	2,36,178 7 2

FEBRUARY 1906.

COLLECTION										
Till the end of the last month					During the month					
Arrears of previous years	For 1905-06			Total including arrears	Arrears of previous years	For 1905-06			Total including arrears
	For previous months	For Jan. 1906	Total			For previous months	For Feb. 1906	Total	
Rs. a. p.	Rs. a. p.	Rs. a. p.	Rs. a. p.	Rs. a. p.	Rs. a. p.	Rs. a. p.	Rs. a. p.	Rs. a. p.	Rs. a. p.
...	3,987 1 11	845 15 9	4,832 1 8	4,832 1 8	...	...	526 13 6	526 13 6	526 13 6
...	4,665 4 10	935 2 0	5,600 6 10	5,600 6 10	...	...	804 9 11	804 9 11	804 9 11
...	3,440 6 3	491 3 10	3,931 10 1	3,931 10 1	...	..	587 12 10	587 12 10	587 12 10
..	3,491 14 4	275 0 8	3,766 15 0	3,766 15 0	...	...	446 4 8	446 4 8	446 4 8
...	830 5 4	149 10 8	980 0 0	980 0 0	...	...	39 15 3	39 15 3	39 15 3
...	13,796 2 10	1,530 14 10	15,327 1 8	15,327 1 8	...	...	2,341 4 4	2,341 4 4	2,341 4 4
...	83 3 1	1 2 9	84 5 10	84 5 10	...	...	1 0 2	1 0 2	1 0 2
..	1,762 12 3	327 14 8	2,090 10 11	2,090 10 11	...	...	296 6 4	296 6 4	296 6 4
...	634 10 4	421 1 4	1,055 11 8	1,055 11 8	..	...	356 15 5	356 15 5	356 15 5
..	2 5 7	...	2 5 7	2 5 7	...	...	0 2 5	0 2 5	0 2 5
...	43 15 0	0 7 10	44 6 10	44 6 10	...	...	1 10 9	1 10 9	1 10 9
...	4 5 5	...	4 5 5	4 5 5	...	...	0 8 10	0 8 10	0 8 10
...	22 5 7	2 12 0	25 1 7	25 1 7	..	...	25 6 6	25 6 6	25 6 6
...	112 0 0	15 12 0	127 12 0	127 12 0	...	...	20 9 0	20 9 0	20 9 0
...	472 0 0	43 0 0	515 0 0	515 0 0	...	...	27 0 0	27 0 0	27 0 0
...	33,348 12 9	5,040 2 4	38,387 15 1	38,387 15 1	...	...	5,476 7 11	5,476 7 11	5,476 7 11
16,332 11 3	35 15 6	40 1 8	76 1 2	16,408 12 5	4,875 13 11	...	813 2 0	813 2 0	5,688 15 11
3,325 8 2	48 3 7	7 11 9	55 15 4	3,381 7 6	154 1 4	...	372 11 3	372 11 3	526 12 7
8,444 13 4	78 5 0	23 4 4	101 9 4	8,546 6 8	560 3 10	...	1,271 10 8	1,271 10 8	1,831 14 6
28,103 0 9	162 8 1	71 1 9	233 9 10	28,336 10 7	5,590 3 1	..	2,457 7 11	2,457 7 11	8,047 11 0
...	8,493 4 0	683 4 0	9,176 8 0	9,176 8 0	..	...	1,166 8 0	1,166 8 0	1,166 8 0
..	9,517 14 0	2,066 10 10	11,584 8 10	11,584 8 10	...	...	891 0 0	891 0 0	819 0 0
...	18,011 2 0	2,749 14 10	20,761 0 10	20,761 0 10	...	...	2,057 8 0	2,057 8 0	2,057 8 0
12,331 9 5	406 0 0	...	406 0 0	12,737 9 5	231 8 9	...	150 6 8	150 6 8	381 15 5
6 4 0	...	..	...	6 4 0	...	...	...	...	..
355 0 0		...	...	355 0 0	5 0 0	...	...	...	5 0 0
12 0 0	...	...	...	12 0 0	...	...	...	...	..
12,704 13 5	406 0 0	...	406 0 0	13,110 13 5	236 8 9	...	150 6 8	150 6 8	386 15 5
45 0 0	1,950 0 0	325 0 0	2,275 0 0	2,320 0 0	...	..	325 0 0	325 0 0	325 0 0
93 14 0	2,432 5 0	405 15 0	2,838 4 0	2,932 2 0	3 0 0	...	448 13 0	448 13 0	451 13 0
16 0 0	639 2 0	104 5 1	743 7 1	759 7 1	...	...	228 8 10	228 8 10	288 8 10
154 14 0	5,021 7 0	835 4 1	5,856 11 1	6,011 9 1	3 0 0	...	1,002 5 10	1,002 5 10	1,005 5 10
...	...	...	...	...	...	...	1 0 0	1 0 0	1 0 0
...	1,547 7 6	16 0 0	1,563 7 6	1,563 7 6	...	..	281 0 0	281 0 0	281 0 0
...	6 13 0	...	6 13 0	6 13 0	...	...	5 4 5	5 4 5	5 4 5
...	109 6 0	7 13 0	117 3 0	117 3 0	...	...	10 8 0	10 8 0	10 8 0
...	...	...	...	...	...	...	979 0 3	979 0 3	979 0 3
..	2,254 6 0	336 6 0	2,590 12 0	2,590 12 0	...	...	480 6 0	480 6 0	480 6 0
...	110 9 0	41 11 6	152 4 6	152 4 6	...	...	55 1 6	55 1 6	55 1 6
404 2 6	2,398 0 0	85 0 0	2,483 0 0	2,887 2 6	...	...	144 0 0	144 0 0	144 0 0
164 0 0	1,847 11 5	310 3 6	2,157 14 11	2,321 14 11	2 1 6	...	352 1 6	352 1 6	354 3 0
...	435 2 4	41 2 0	476 4 4	476 4 4	...	...	42 14 7	42 14 7	42 14 7
...	400 0 0	66 10 8	466 10 8	466 10 8	...	...	66 10 8	66 10 8	66 10 8
...	1,000 0 0	...	1,000 0 0	1,000 0 0	...	...	...	...	...
..	442 0 0	...	442 0 0	442 0 0	...	...	15 0 0	15 0 0	15 0 0
...	604 0 9	35 10 3	639 11 0	639 11 0	...		138 10 8	138 10 8	138 10 8
563 2 6	11,155 8 0	940 8 11	12,096 0 11	12,664 3 5	2 1 6	...	2,570 9 7	2,570 9 7	2,572 11 1
...	466 14 6	124 6 0	591 4 6	591 4 6	...	...	153 0 0	153 0 0	153 0 0
...	1,458 9 4	23 9 10	1,482 3 2	1,482 3 2	...	.	230 0 0	230 0 0	230 0 0
..	152 13 6	...	152 13 6	152 13 6	...	...	..	...	...
3,745 13 4	15,852 8 0	2,308 12 0	16,161 4 0	..	...	...	2,308 7 9	2,308 7 9	2,308 7 9
3,745 13 4	15,930 13 4	2,456 11 10	18,387 9 2	22,133 6 6	...	...	2,691 7 9	2,691 7 9	2,691 7 9
45,276 12 0	84,036 3 2	12,093 11 9	96,129 14 11	1,41,406 10 11	5,831 13 4	...	16,407 5 8	16,407 5 8	22,239 3 0

RECEIPTS FOR

Receipts	COLLECTION				
	Total Collections				
	Arrears of previous years	For 1905-06			Total including arrears
		For previous months	For Feb. 1906	Total	
	Rs. a. p.	Rs. a. p.	Rs. a. p.	Rs. a. p.	Rs. a. p.
I. Octroi—					
(1) Timber ...	...	4,832 1 8	526 13 6	5,358 15 2	5,358 15 2
(2) Tobacco ...	...	5,600 6 10	804 9 11	6,405 0 9	6,405 0 9
(3) Betel-leaves ...	...	3,931 10 1	587 12 10	4,519 6 11	4,519 6 11
(4) Fresh cocoanuts ...	...	3,766 15 0	446 4 8	4,213 3 8	4,213 3 8
(5) Dry cocoanuts ...	...	980 0 0	39 15 3	1,019 15 3	1,019 15 3
(6) Piece-goods ...	...	15,327 1 8	2,341 4 4	17,668 6 0	17,668 6 0
(7) Mangalore tiles ...	...	84 5 10	1 0 2	85 6 0	85 6 0
(8) Sugar ...	...	2,090 10 11	296 6 4	2,387 1 3	2,387 1 3
(9) Horse gram ...	...	1,055 11 8	356 15 5	1,412 11 1	1,412 11 1
(10) Oats ...	...	2 5 7	0 2 5	2 8 0	2 8 0
(11) Bran ...	...	44 6 10	1 10 9	46 1 7	46 1 7
(12) Chaff ...	...	4 5 5	0 8 10	4 14 3	4 14 3
(13) Storage fees ...	...	25 1 7	25 6 6	50 8 1	50 8 1
(14) Rahadari fees ...	...	127 12 6	20 9 0	148 5 0	148 5 0
(15) Tobacco licenses ...	...	515 0 0	27 0 0	542 0 0	542 0 0
Total, Octroi ...	...	38,387 15 1	5,476 7 11	43,864 7 0	43,864 7 0
II. Tax on houses, lands, etc.—					
(a) House tax ...	21,208 9 2	76 1 2	813 2 0	889 3 2	22,097 12 4
(b) Lighting tax ...	3,479 9 6	55 15 4	372 11 3	428 10 7	3,908 4 1
(c) Water tax ...	9,005 1 2	101 9 4	1,271 10 8	1,373 4 0	10,378 5 2
Total, Taxes ...	33,693 3 10	233 9 10	2,457 7 11	2,691 1 9	36,384 5 7
III. License Receipts—					
(a) Liquor licenses ..	...	9,176 8 0	1,166 8 0	10,343 0 0	10,343 0 0
(b) Other licenses ...	..	11,584 8 10	891 0 0	12,475 8 10	12,475 8 10
Total, License Receipts ..	...	20,761 0 10	2,057 8 0	22,818 8 10	22,818 8 10
VII. Other taxes, Mohatarfa—					
(a) Shop tax ...	12,563 2 2	406 0 0	150 6 8	556 6 8	13,119 8 10
(b) Loom tax ...	6 4 0	...	...	...	6 4 0
(c) Oil-mill tax ...	360 0 0	...	...	...	360 0 0
(d) Cart tax ...	12 0 0	...	..	...	12 0 0
Total, Mohatarfa ...	12,941 6 2	406 0 0	150 6 8	556 6 8	13,497 12 10
VIII. Rents from—					
(a) Market contract fees ...	45 0 0	2,275 0 0	325 0 0	2,600 0 0	2,645 0 0
(b) Market rents ...	96 14 0	2,838 4 0	448 13 0	3,287 1 0	3,383 15 0
(c) Land rents ..	16 0 0	743 7 1	228 8 10	971 15 11	987 15 11
Total, Rents ...	157 14 0	5,856 11 1	1,002 5 10	6,859 0 11	7,016 14 11
IX. Fines	...	...	1 0 0	1 0 0	1 0 0
X. Miscellaneous—					
(a) Sale of lands ...	...	1,563 7 6	281 0 0	1,844 7 6	1,844 7 6
(b) Refunds ...	...	6 13 0	5 4 5	12 1 5	12 1 5
(c) Pounds ...	...	117 3 0	10 8 0	127 11 0	127 11 0
(d) Land revenue ...	...	...	979 0 3	979 0 3	979 0 3
(e) English School fees ...	...	2,590 12 0	480 6 0	3,071 2 0	3,071 2 0
(f) Kannada Boys' School fees	..	152 4 6	55 1 6	207 6 0	207 6 0
(g) Sale of manure ...	404 2 6	2,483 0 0	144 0 0	2,627 0 0	3,031 2 6
(h) Scavenging fees ...	166 1 6	2,157 14 11	352 1 6	2,510 0 5	2,676 1 11
(i) Notice and warrant fees ...	...	476 4 4	42 14 7	519 2 11	519 2 11
(j) Chattram feeding charges...	..	466 10 8	66 10 8	533 5 4	533 5 4
(k) Other contributions ...	...	1.000 0 0		1,000 0 0	1,000 0 0
(l) Sale of grass ...	...	442 0 0	15 0 0	457 0 0	457 0 0
(m) Other items ...	...	639 11 0	138 10 8	778 5 8	778 5 8
Total, Miscellaneous ...	570 4 0	12,096 0 11	2,570 9 7	14,666 10 6	15,236 14 6
Payments to Municipal licenses rendered to private parties ...	...	591 4 6	153 0 0	744 4 6	744 4 6
Deposits ...	...	1,482 3 2	230 0 0	1,712 3 2	1,712 3 2
Advances recovered ...	...	152 13 6	...	152 13 6	152 13 6
Collection of tolls	3,745 13 4	16,161 4 0	2,308 7 9	18,469 11 9	22,215 9 1
Total ...	3,745 13 4	18,387 9 2	2,691 7 9	21,079 0 11	24,824 14 3
Grand Total ...	51,103 9 4	96,129 14 11	16,407 5 8	1,12,536 4 7	1,63,644 13 11

FEBRUARY 1906—*concld.*

REMISSONS GRANTED TILL THE END OF FEBRUARY 1906					BALANCE					Remarks
Arrears of previous years	For 1905-06			Total	Arrears of previous years	For 1905-06			Total including arrears	
	For previous months	For Feb. 1906	Total			For previous months	For Feb. 1906	Total		
Rs. a. p.	Rs.	Rs.	Rs.	Rs. a. p.	Rs. a. p.	Rs. a. p.	Rs. a. p.	Rs. a. p.	Rs. a. p.	
...	...	...	...	...		...	...	...	...	
...	...	...	...	...	...

EXPENDITURE FOR THE MONTH OF FEBRUARY 1906.

Expenditure	Budget Estimate Expenditure for 1905-06	Disbursements: For previous months of 1905-06	Disbursements: For this month	Disbursements: Total	Balance
	Rs.	Rs. a. p.	Rs. a. p.	Rs. a. p.	Rs. a. p.
I. Interest on Debts	...	...	...	...	...
II. Head Office Charges	13,516	7,044 13 7	938 3 1	7,983 0 8	5,532 15 4
III. Collections—					
(a) Octroi	5,630	3,339 10 9	445 0 7	3,784 11 4	1,845 4 8
(b) House tax and Mohatarfa }	6,594	3,624 2 0	566 13 9	4,190 15 9	2,403 0 3
(c) Other taxes ... }	590	351 10 11	47 0 0	398 10 11	291 5 1
(d) Rents assigned to Municipality					
Total III, Collections ...	12,914	7,315 7 8	1,058 14 4	8,374 6 0	4,539 10 0
IV. Conservancy—					
(a) Establishment	31,896	17,483 3 5	2,489 2 0	19,972 5 5	11,923 10 7
(b) Other Charges	6,417	3,329 15 4	534 8 2	3,864 7 6	2,552 8 6
Total IV, Conservancy ...	38,313	20,813 2 9	3,023 10 2	23,836 12 11	14,476 3 1
VI. Registration of Births and Deaths ...	7,720	3,819 1 4	532 1 7	4,351 2 11	3,368 13 1
VII. Lighting Charges	16,920	4,065 7 9	289 0 0	4,354 7 9	12,565 8 3
VIII. Public Works—Grant-in-aid from Govt. ...	10,000	...	...		10,000 0 0
(a) Supervision establishment	5,964	3,308 4 3	302 1 8	3,610 5 11	2,353 10 1
(b) Roads, special repairs	16,000	12,172 7 7	2,506 11 3	14,679 2 10	1,320 13 2
(c) Do repairs	9,000	4,681 9 4	1,285 5 10	5,966 15 2	3,033 0 10
(d) Drains, original	...	...	...	...	...
(e) Do repairs	4,542	935 5 5	308 14 11	1,244 4 4	3,297 11 8
(f) Water-supply, original	...	...	...	...	...
(g) Do repairs...		...	...	...	...
(h) Buildings, original	2,000	354 12 8	5 4 0	360 0 8	1,639 15 4
(i) Do repairs	3,500	1,492 13 8	.	1,492 13 8	2,007 2 4
(j) Road watering and planting	1,500	399 10 8	371 2 9	770 13 5	729 2 7
(k) Other works, original	500	492 8 8	...	492 8 8	7 7 4
(l) Do repairs	1,500	1,018 2 7	38 4 0	1,056 6 7	443 9 5
(m) Compensation	3,000	3,000 0 0	...	3,000 0 0	...
(n) Tools and plant	1,000	407 8 7	...	407 8 7	592 7 5
(o) Reserve	500	38 9 7	3 7 8	42 1 3	457 14 9
(p) Incomplete works of last year	1,249	...	...	...	1,249 0 0
(q) Removing congestion...	3,600	...	...	...	3,600 0 0
(r) Roads, original	1,249		76 8 9	76 8 9	1,172 7 3
Total VIII, Public Works ...	65,104	28,301 13 0	4,897 12 10	33,199 9 10	31,904 6 2
IX. Charitable Grants—					
(a) Dispensaries including itinerant medical charges	2,142	867 15 1	90 5 8	958 4 9	1,183 11 3
(b) Hospitals	2,400	1,400 0 0	200 0 0	1,600 0 0	800 0 0
(c) E. D. Hospital	9,420	4,273 4 11	778 5 1	5,051 10 0	4,368 6 0
(d) Vaccination	524	259 0 0	37 0 0	296 0 0	228 0 0
(e) Maternity	6,690	1,934 2 6	357 14 5	2,292 0 11	4,397 15 1
(f) Langarkhana	3,000	1,723 5 0	209 0 0	1,932 5 0	1,067 11 0
(g) Chattram	1,819	1,026 8 11	165 10 2	1,192 3 1	626 12 11
(h) Tirupati Pilgrims' Chattram	...	...	...	...	..
(i) Home for incurable paupers	724	484 3 4	82 11 1	566 14 5	157 1 7
(j) Midwives	...		...	...	..
(k) Girdlestone Ward, Eye Infirmary ...	...	..	...	...	...
Total IX, Charitable Grants ...	26,719	11,968 7 9	1,920 14 5	13,889 6 2	12,829 9 10
X. Education—					
(a) Srinivasa Mandiram Library	300	175 0 0	25 0 0	200 0 0	100 0 0
(b) City Municipal English School	7,687	4,059 12 1	575 2 3	4,634 14 4	3,052 1 8
(c) Bangalore Sanskrit College	600	...	...	...	600 0 0
(d) Municipal Kannada Boys' School ...	2,311	1,290 1 4	198 0 0	1,488 1 4	822 14 8
(e) Schools, Grants-in-aid	588	308 0 0	44 0 0	352 0 0	236 0 0
(f) Chamarajendrapet School	1,236	718 7 9	103 0 0	821 7 9	414 8 3
Total X, Education ...	12,722	6,551 5 2	945 2 3	7,496 7 5	5,225 8 7
XI. Miscellaneous—					
(a) Garden	1,200	509 7 0	69 2 3	578 9 3	621 6 9
(b) Refunds, etc.	447	447 0 0	...	447 0 0	...
(c) Cattle-pounds	300	122 15 9	14 0 0	136 15 9	163 0 3
(d) Reward to dog and snake killers ...	200	2 7 0	2 1 0	4 8 0	195 8 0
(e) Pension charges	500	...	...	..	500 0 0
(f) Fairs and festivals (City Market Show) ...	1,000	256 0 2	...	256 0 2	743 15 10
(g) Other miscellaneous items	700	32 9 0	...	32 9 0	667 7 0
Total XI, Miscellaneous ...	4,347	1,370 6 11	85 3 3	1,455 10 2	2,891 5 10
Water-supply charges	39,260	...	...	...	39,260 0 0
Grand Total ...	2,37,535	91,250 1 11	13,690 13 11	1,04,940 15 10	1,32,594 0 2
Drains, original	...	1,680 0 0	453 8 0	2,133 8 0	..
Refunds	...	92 12 0	...	92 12 0	...
City Improvement	...	41 6 7	..	41 6 7	...
Compensation		188 9 0	437 6 2	625 15 2	..
Repayment of deposits		715 15 4	7 3 4	723 2 8	...
Total ...		2,718 10 11	898 1 6	3,616 12 5	...
Grand Total ...	237 535	93,968 12 10	14,588 15 5	1,08,557 12 3	
Closing Balance	...	...	1,10,579 10 3	1,10,579 10 3	...

384

Audited Cash Account Current of the Municipal Commission for the City of Bangalore for the month of November 1905.

No.	Receipts	Amount	Total
		Rs. a. p.	Rs. a. p.
I	Octroi—		
	(1) Timber ...	623 14 4	
	(2) Mangalore tiles ...	24 11 6	
	(3) Piece-goods ...	2,099 15 6	
	(4) Sugar ...	387 7 8	
	(5) Horse gram ...	25 5 0	
	(6) Oats ...	0 2 8	
	(7) Bran ...	7 9 0	
	(8) Chaff ...	1 0 4	
	(9) Fresh cocoanuts ...	519 8 7	
	(10) Dry do. ...	123 0 9	
	(11) Betel-leaves ...	518 10 8	
	(12) Tobacco ...	877 3 4	
	(13) Storage fees ...	3 0 0	
	(14) Rahadari fees ...	19 13 0	
	(15) Tobacco license ...	152 0 0	
	Total ...		5,383 6 4
II	Tax on houses, buildings and lands		2,364 10 [illegible]
	Lighting tax ...		570 11 0
III	License Receipts—		
	(a) Liquor shops ...	782 0 0	
	(b) Other licenses ...	1,342 8 0	
		821 14 0	
	Total, License Receipts ...		2,946 6 0
IV	Other taxes—Mohatarfa—		
	(a) Shop tax ...	3,801 5 11	
	(b) Loom tax ...	3 4 0	
	(c) Oil-mill tax ...	85 0 0	
	(d) Cart tax ...	2 0 0	
	Total, Mohatarfa ...		3,891 9 11
	Tolls ...		2,308 12 0
	Toll contract ...		
III	Rents from—		
	Market contract ...	325 0 0	
	(a) Markets, shops, etc. ...	421 4 0	
	(b) Lands ...	134 12 0	
	Total, Rents ...		881 0 0
IX	Fines ...		.....
X	Miscellaneous—		
	(a) Sale of lands ...	207 11 0	
	(b) Refunds ...	.....	
	(c) Recoveries ...	.....	
	(d) Pounds ...	17 2 0	
	(e) Land revenue and local cess	.....	
	(f) English school fees ...	710 12 0	
	(g) Kannada school fees ...	33 0 0	
	(h) Sale of manure ...	777 0 0	
	(i) Scavenging fees ...	338 8 0	
	(j) Notice and warrant fees	135 11 1	
	(k) Chattram feeding charges ...	66 10 8	
	(l) Contributions ...	.....	
	(m) Sale of grass ...	102 0 0	
	(n) Other miscellaneous items	171 7 4	
	(o) Water tax ...	1,276 10 5	
	Total, Miscellaneous ...		3,836 8 6
	Advances recovered ...		50 0 0
	Deposit accounts ...		96 3 2
	Payments for Municipal services rendered to individuals.		78 8 3
	Loans ...		.....
	Grand Total ...		22,407 11 10
	* Opening balance ...		92,131 0 10
	Grand Total ...		1,14,538 12 8

No.	Expenditure	Amount	Total
		Rs. a. p.	Rs. a. p.
II	Head office charges ...		940 12 4
			(a) 233 5 7
III	Collections—		
	(a) Octroi ...	445 3 2	
	(b) House tax and Mohatarfa ...	459 11 0	
	(c) Other taxes ...	26 0 0	
	(d) Rents assigned to Municipality	47 0 0	
	Total, Collections ...		977 14 2
IV	Conservancy—		
	(a) Establishment ...	2,623 8 4	
	(b) Other charges ...	479 10 5	
	Total, Conservancy ...		3,103 2 9
VI	Registration of Births and Deaths ...		547 1 2
VII	Lighting charges ...		1,221 11 4
VIII	Public Works—		
	(a) Supervision establishment ...	1,015 6 11	
	(b) Roads, special ...	.....	2,165 7 7
	(c) Do ordinary ...	.....	
	(d) Drains, original ...	48 14 2	
	(e) Do repairs ...	110 9 0	
	(f) Water-supply, original ...	.....	
	(g) Do repairs	.....	
	(h) Buildings, original ...	.....	28 9 0
	(i) Do repairs ...	37 7 8	
	(j) Road watering and planting ...	39 11 11	
	(k) Other works, original ...	.....	1 15 1
	(l) Other works, repairs ...	.....	167 13 4
	(m) Compensation ...	536 7 1	
	(n) Tools and plant ...	.....	71 9 4
	(o) Reserve ...	.....	76 8 10
	Filling fort trench ...	.....	.....
	Total, Public Works ...		4,300 7 11
IX	Charitable Grants—		
	(a) Dispensaries including itinerant medical charges.	110 14 8	
	(b) Hospital ...	200 0 0	
	(c) E. D. Hospital ...	779 7 7	
	(d) Vaccination ...	37 0 0	
	(e) Maternity ...	273 9 11	
	(f) Langarkhana ...	214 8 0	
	(g) Chattram ...	129 4 8	
	(h) Orphanage ...	.....	
	(i) Home for incurable paupers ...	82 0 9	
	(k) Midwives ...	.....	
	(l) Girdlestone ward ...	.....	
	Total, Charitable Grants ...		1,826 13 7
X	Education—		
	Establishment ...	795 1 7	
	Contingencies ...	38 0 0	
	Grants ...	65 0 0	
	Total, Education ...		898 1 7
XI	Miscellaneous—		
	(a) Garden ...	.....	82 5 7
	(b) Refunds, etc. ...	.....	
	(c) Cattle-pounds ...	19 6 0	
	(d) Reward to dog and snake killers	0 13 0	
	(e) Pension charges ...	47 1 11	
	(f) Fairs and festivals (City Market Show.)	.....	
	(g) Other Miscellaneous items ...		149 10 6
	Repayment of Deposits ...		61 12 5
	Municipal Revenue Balance ...		5,450 0 9
	Public Debt Balance ...		4,827 14 7
	Total Closing Balance ...		1,00,277 15 4
	Total Expenditure ...		14,260 13 4
	Closing Balance ...		1,00,277 15 4
	Grand Total ...		1,14,538 8

(a) Transfer entry in adjustment of stationery charges for June 1905 (final) included in the account for that month but not taken in the "carried over" Total. Hence included again.

* Opening balance arrived at by adapting Comptroller's figure on audited cash account for August 1905, *viz.*, Rs. 74,778-12-3.

Audited Cash Account Current of the Municipal Commission for the City of Bangalore for the month of December 1905.

No.	Receipts	Amount	Total
		Rs. a. p.	Rs. a. p.
I	Octroi—		
	(1) Timber	721 6 9	
	(2) Mangalore tiles ...	3 10 2	
	(3) Piece-goods	1,918 13 5	
	(4) Sugar	339 1 1	
	(5) Horse gram	163 15 6	
	(6) Oats	0 2 9	
	(7) Bran	7 14 11	
	(8) Chaff	0 11 2	
	(9) Fresh cocoanuts ...	518 8 1	
	(10) Dry do	127 2 1	
	(11) Betel-leaves	620 4 7	
	(12) Tobacco	655 6 6	
	(13) Storage fees	5 8 6	
	(14) Rahadari fees	18 1 0	
	(15) Tobacco license ...	66 0 0	
	Total, Octroi ...		5,166 10 6
II	Tax on houses, buildings & lands.		2,820 7 8
	Lighting tax		594 12 9
III	License Receipts—		
	(a) Liquor shops	1,251 8 0	
	(b) Other licenses	861 8 0	
	Total, License Receipts ...		2,113 0 0
VII	Other taxes, Mohatarfa—		
	(a) Shop tax	1,459 1 0	
	(b) Loom tax	.....	
	(c) Oil-mill tax	30 0 0	
	(d) Cart-tax	2 0 0	
	Total, Mohatarfa ...		1,491 1 0
	Tolls	.....	
	Toll contract		2,308 12 0
VIII	Rents from—		
	Market contract	325 0 0	
	(a) Markets, shops, etc. ...	419 8 0	
	(b) Lands	121 8 0	
	Total, Rents ...		866 0 0
IX	Fines		.....
X	Miscellaneous—		
	(a) Sale of lands	630 8 0	
	(b) Refunds	5 3 0	
	(c) Recoveries	.....	
	(d) Pounds	10 3 0	
	(e) Land revenue & local cess	.....	
	(f) English school fees ...	.....	
	(g) Kannada school fees ...	.....	
	(h) Sale of manure	733 2 6	
	(i) Scavenging fees ...	353 14 5	
	(j) Notice and warrant fees ...	78 0 0	
	(k) Chattram feeding charges ...	66 10 8	
	(l) Contributions	.....	
	(m) Sale of grass	.....	
	(n) Other miscellaneous items...	85 8 0	
	(o) Water tax	1,453 2 10	
	Total, Miscellaneous ..		3,416 4 5
	Advances recovered		.....
	Deposit accounts		26 6 6
	Payments for Municipal services rendered to individuals ..		38 4 6
	Loans		.....
	Total ...		18,841 11 4
	Opening Balance ..		1,00,277-15-4
	Grand Total ...		1,19,119-10-8

No.	Expenditure	Amount	Total
		Rs. a. p.	Rs. a. p.
II	Head Office charges		1,233 6 6
III	Collections—		
	(a) Octroi	439 9 6	
	(b) House tax and Mohatarfa ...	511 1 7	
	(c) Other taxes ...	26 0 0	
	(d) Rents assigned to Municipality	51 0 0	
	Total, Collections ...		1,027 11 1
IV	Conservancy—		
	(a) Establishment	2,523 14 1	(1)
		75 0 0	
	(b) Other charges	505 6 8	
	Total, Conservancy ..		3,104 4 7
V	Contributions		(2)6,123 4 9
VI	Registration of Births and Deaths ...		560 13 8
VII	Lighting charges		394 5 5
VIII	Public Works—		
	(a) Supervision establishment ...	279 5 3	
	(b) Roads original	.....	
	(c) Do repairs	4,551 10 4	
	(d) Drains, original	352 6 0	
	(e) Do repairs	206 9 6	
	(f) Water-supply, original ...	.....	
	(g) Do repairs ...	.....	
	(h) Buildings, original	286 3 8	
	(i) Do repairs	451 13 1	
	(j) Road watering and planting ...	41 4 9	
	(k) Other works, original ...	.....	
	(l) Do repairs ...	231 11 2	
	(m) Compensation	1,457 11 3	
	(n) Tools and plant	.....	
	(o) Filling Fort Trench... ...	91 11 3	
	(p) Reserve	.....	
	Total, Public Works ...		7,950 6 3
IX	Charitable grants—		
	(a) Dispensaries including itinerant medical charges	142 4 6	
	(b) Hospital	200 0 0	
	(c) K. D. Hospital	712 10 9	
	(d) Vaccination	37 0 0	
	(e) Maternity	402 9 8	
	(f) Langarkhana	206 8 0	
	(g) Chattram	161 15 6	
	(h) Orphanage	.....	
	(j) Home for incurable paupers ...	68 8 5	
	(k) Midwives	.....	
	(l) Girdlestone ward	.....	
	Total, Charitable Grants ...		1,931 8 10
X	Education—		
	(a) Establishment	805 1 4	
	(b) Contingencies	96 2 0	
	(c) Grants	77 0 0	
	Total, Education ...		978 3 4
XI	Miscellaneous—		
	(a) Garden	71 0 0	
	(b) Refunds, etc.	.....	
	(c) Cattle-pounds	15 12 6	
	(d) Reward to dog and snake killers	.....	
	(e) Pension charges	(3) 59 9 11	
	(f) Fairs and festivals (City Market Show).	1 12 0	
	(g) Other miscellaneous items ...	7 3 0	155 5 5
	Repayment of Deposits ...		30 1 3
	Total Expenditure ..	23,489 7 1	
	Municipal Revenue Balance ...		90,805 15 9
	Public Debt Balance ...		4,824 3 10
	Closing Balance ...		95,630 3 7
	Grand Total ...		1,19,119 10 8

(1) Rs. 75 0 0 charged in the accounts for July 1905 omitted to be incorporated in the accounts for that month and now included.

(2) Rs. 6,123 4 7. Lighting charges, Electric.

(3) Rs. 59 9 11. Pensionary charges.

Statement showing the number of Births and Deaths registered within the City Municipal limits during the month of February 1906.

Diseases	Europeans		Eurasians		Mahomedans		Hindus		Native Christians		Other classes		Jains		Parsis		Total		Total		Difference	
	M.	F.	M.	F.	M.	F.	M.	F.	M.	F.	M.	F.	M.	F.	M.	F.	M.	F.	Feb. 1906	Jan. 1906	Increase	Decrease
Cholera	...	...	...	...	...	...	...	...	...	...	...	...	...	...	...	...	...	...	...	...	...	...
Small-pox	...	...	...	...	2	1	3	6	1	1	...	...	...	...	...	...	6	8	14	16	...	2
Fevers	...	...	...	...	2	3	12	20	2	1	...	...	...	...	...	...	16	24	40	37	3	...
Bowel-complaints	...	...	...	...	...	3	11	17	...	...	...	...	...	...	...	...	11	20	31	25	6	...
Wounding	...	...	...	...	...	...	...	1	...	...	...	...	...	...	...	...	...	1	1	...	1	...
Plague	...	...	...	...	2	2	27	23	...	1	...	...	...	...	...	...	29	26	55	111	...	56
Childbirth	...	...	...	...	...	1	...	5	...	...	...	...	...	...	...	...	...	6	6	4	2	...
Other causes—																						
Ague	...	...	...	...	...	...	...	...	...	2	...	...	...	...	...	...	...	2	2	...	2	...
Anœmia	...	...	...	...	...	...	...	2	...	...	...	...	...	...	...	...	...	2	2	1	1	...
Albiminoria	...	...	...	...	...	...	...	...	1	...	...	...	...	...	...	...	1	...	1	...	1	...
Asthma	...	...	...	...	...	...	1	1	...	...	...	...	...	...	...	...	1	1	2	1	1	...
Acute mania	...	...	...	1	...	...	...	...	...	...	...	...	...	...	...	...	1	...	1	...	1	...
Bronchitis	...	...	...	...	...	3	1	8	17	...	...	...	...	...	...	...	11	18	29	24	5	...
Convulsions	...	...	...	...	...	1	2	5	4	...	...	...	...	...	...	...	6	6	12	15	...	3
Cancer	...	...	...	...	...	...	...	...	1	...	...	...	...	...	...	...	...	1	1	1	...	...
Concrum Oris	...	...	...	...	...	...	...	1	...	...	...	...	...	...	...	...	1	...	1	...	1	...
Debility	...	...	...	...	...	...	1	6	10	...	...	...	...	...	...	...	6	11	17	3	14	...
Drowning	...	...	...	...	...	...	...	2	...	...	...	...	...	...	...	...	2	...	2	1	1	...
Dropsy	...	...	...	...	...	...	...	7	5	...	...	...	...	...	...	...	7	5	12	10	2	...
Diabetes	...	...	...	...	...	...	...	...	1	...	...	...	...	...	...	...	...	1	1	3	...	2
Hernia	...	...	...	...	...	...	...	1	...	...	...	...	...	...	...	...	1	...	1	1	...	...
Heart disease	...	...	...	...	...	...	...	1	...	...	...	...	...	...	...	...	1	...	1	1	...	...
Lipoma	...	...	...	...	...	...	...	1	...	...	...	...	...	...	...	...	1	...	1	1	...	...
Leprosy	...	...	...	...	...	...	...	1	...	...	...	...	...	...	...	...	1	...	1	...	1	...
Liver disease	...	...	...	...	...	...	...	4	...	...	...	...	...	...	...	...	4	...	4	2	2	...
Marasmus	...	...	...	...	...	...	...	1	...	...	...	...	...	...	...	...	1	...	1	3	...	2
M. Cachexia	...	...	...	...	...	...	...	13	9	...	1	...	...	...	...	...	13	10	23	10	13	...
Measles	...	...	...	...	...	2	...	4	3	...	1	...	...	...	...	...	6	4	10	13	...	3
Malnutrition	...	...	...	...	...	1	...	3	3	...	...	...	...	...	...	...	4	3	7	3	4	...
Not known	...	...	...	...	...	1	...	1	...	...	...	...	...	...	...	...	2	...	2	...	2	...
Old age	...	...	...	...	...	1	6	13	6	2	...	...	...	...	...	...	16	12	28	66	...	38
Phthisis	...	...	...	...	...	1	5	7	7	...	...	...	...	...	...	...	8	12	20	18	2	...
P. Birth	...	...	...	...	...	2	3	15	3	...	...	...	...	...	...	...	17	6	23	34	...	11
Pneumonia	...	...	...	...	...	1	...	3	...	...	...	...	...	...	...	...	4	...	4	5	...	1
Paralysis	...	...	...	...	...	...	...	1	1	...	...	...	...	...	...	...	1	1	2	6	...	4
Phimosis	...	...	...	...	...	...	...	1	...	...	...	...	...	...	...	...	1	...	1	1	...	...
Syncope	...	...	...	...	...	...	...	1	...	...	...	...	...	...	...	...	1	...	1	1	...	...
Starvation	...	...	...	...	...	...	...	1	...	...	...	...	...	...	...	...	1	...	1	...	1	...
Scarpion sting	...	...	...	...	...	...	...	...	1	...	...	...	...	...	...	...	...	1	1	...	1	...
Urinary fistula	...	...	...	...	...	...	...	3	...	...	...	...	...	...	...	...	3	...	3	2	1	...
Ulcer	...	...	...	...	...	...	...	1	...	...	...	...	...	...	...	...	1	...	1	2	...	1
Rupture	...	...	...	...	...	...	...	...	...	...	1	...	...	...	...	...	...	1	1	...	1	...
Abscess	...	...	...	...	...	...	...	...	...	...	...	...	...	...	...	...	...	...	...	1	...	1
Appendicitis	...	...	...	...	...	...	...	...	...	...	...	...	...	...	...	...	...	...	...	1	...	1
Chest pain	...	...	...	...	...	...	...	...	...	...	...	...	...	...	...	...	...	...	...	1	...	1
Doral Myclitis	...	...	...	...	...	...	...	...	...	...	...	...	...	...	...	...	...	...	...	1	...	1
Fracture	...	...	...	...	...	...	...	...	...	...	...	...	...	...	...	...	...	...	...	1	...	1
Hanging	...	...	...	...	...	...	...	...	...	...	...	...	...	...	...	...	...	...	...	2	...	2
Hydrophobia	...	...	...	...	...	...	...	...	...	...	...	...	...	...	...	...	...	...	...	1	...	1
Hæmoptysis	...	...	...	...	...	...	...	...	...	...	...	...	...	...	...	...	...	...	...	1	...	1
Lung disease	...	...	...	...	...	...	...	...	...	...	...	...	...	...	...	...	...	...	...	1	...	1
Manorrhogia	...	...	...	...	...	...	...	...	...	...	...	...	...	...	...	...	...	...	...	1	...	1
Total of other causes	...	...	...	1	...	13	18	106	74	3	5	...	...	...	...	...	123	97	220	239	...	39
Total Deaths	...	...	...	1	...	19	28	159	146	6	8	...	...	...	...	...	185	182	367	432	...	65
Total Births	...	...	1	1	...	3	3	59	43	2	1	...	...	...	...	...	65	48	113	134	...	23

Abstract Mortuary Return and the Percentage of Births and Deaths on the estimated population of 69,447.

Classes	Births		Difference		Percentage		Deaths		Difference		Percentage		Remarks
	Feb. 1906	Jan. 1906	Increase	Decrease	Feb. 1906	Jan. 1906	Feb. 1906	Jan. 1906	Increase	Decrease	Feb. 1906	Jan. 1906	
Hindus ...	102	94	8	...	0·14	0·13	306	338	...	32	0·44	0·48	There were 367 deaths during the month, of which 14 were from small-pox, 40 from fevers, 31 from bowel-complaints, 1 from wounding, 55 from plague, 6 from childbirth and 220 from all other causes as detailed in the statement.
Mahomedans ...	6	9	..	3	0·008	0·01	47	56	...	9	0·05	0·08	
Native Christians ...	3	7	...	4	0·004	0·01	13	4	9	...	0·01	0·005	
Other classes ...	...	19	...	19	...	0·02	...	28	...	28	...	0·04	
Jains ...	..	...	..	...	...	..	...	...	...	...	...	...	
Parsis ...	...	...	...	...	...	...	...	...	...	...	...	...	
Europeans ...	1	1	...	...	0·001	0·001	...	1	...	1	...	0·001	
Eurasians ...	1	4	..	3	0·001	0·005	1	5	...	4	0·001	0·007	
Total ...	113	134	...	21	0·16	0·19	367	432	...	65	0·57	0·62	

Age.

Classes	Total deaths	Under 1 year	2 to 5 years	6 to 12 years	12 to 20 years	21 to 30 years	31 to 40 years	41 to 50 years	51 to 60 years	Above 60 years
Hindus ...	306	67	45	31	26	27	36	22	8	44
Mahomedans ...	47	9	4	6	3	2	4	3	8	8
Native Christians ...	13	1	1	2	1	1	2	1	1	3
Other classes ...	...	...	...	...	...	...	...	...	...	...
Jains ...	...	...	...	...		...	...	...	...	...
Parsis ...	...	...	...	...	...	...	...	..	...	...
Europeans ...	...	...	...	...	...	...	...	...	...	...
Eurasians ...	1	...	...	...	...	...	1	...	...	...
Total ...	367	77	50	39	30	30	43	26	17	55

388

Progress report for the month of February 1906.

ulars	Estimate	Expenditure during the month	Expenditure from 1st July	Total	Balance
VIII. PUBLIC WORKS.		Rs. a. p.	Rs. a. p.	Rs. a. p.	Rs. a.
(a) Supervision	5,964				
Establishment		298 12 4	3,279 11 0	3,578 7 4	.....
Contingent charges		3 5 4	28 9 3	31 14 7	.....
Total ...		302 1 8	3,308 4 3	3,610 5 11	2,353 10 1
(b) Special repairs of roads	31,000				
E. Street in Fort		18 12 0	.....	18 12 0	.....
Mysore road		4 10 6	379 14 5	384 8 11	.....
Fort Main road		203 3 9	301 9 8	504 13 5	.....
Avenue road		299 1 10	949 0 11	1,248 2 9	.....
Post Office road		436 9 1	367 11 10	804 4 11	.....
Race-Course road		503 5 6	2,409 14 8	2,913 4 2	.....
Mission road		104 15 10	487 5 6	592 5 4	.....
Hosur road		107 8 10	787 7 0	894 15 10	.....
Lalbagh road		86 11 6	371 12 0	458 7 6	.....
New Tharagupet III Main road ...		25 13 0	.....	25 13 0	.....
Taluk Cutcherry road		92 12 1	120 9 0	213 5 1	.....
City Railway cross road		126 3 1	324 7 0	450 10 1	.....
Woollen Mill road		65 0 0	233 0 0	298 0 0	.....
Sultanpet road		267 0 3	32 4 0	299 4 3	.....
V Main road, Chamarajpet		150 0 0	.....	150 0 0	.....
C. lane in Fort		15 0 0	.....	15 0 0	.....
As per previous payment		.....	5,407 7 7	5,407 7 7	.....
Total ...		2,506 11 3	12,172 7 7	14,679 2 10	16,320 13 2
(c) Roads repairs, ordinary	11,000				
Pay of Engine-driver...		25 0 0	210 0 0	235 0 0	.....
Pay of permanent gang coolies		439 3 3	3,110 12 8	3,549 15 11	.....
Forming up sides of Kitchayya chattram road		9 6 0	91 3 5	100 9 5	.....
Repairing roads in VI Division... ...		85 13 2	17 14 4	103 11 6	.....
Forming up sides on Race-Course road ...		59 0 5	103 0 4	162 0 9	.....
Do Post Office road		46 9 0	56 10 0	103 3 0	.....
Collecting materials for petty repairs of roads in VII Division		41 4 0	88 14 0	130 2 0	.....
Collecting sand for several roads		463 8 0	.....	463 8 0	.....
Collecting materials for roads in I Division...		115 10 0	.....	115 10 0	.....
As per previous payment		.....	1,003 2 7	1,003 2 7	.....
Total ...		1,285 5 10	4,681 9 4	5,966 15 2	5,033 0 10

Progress report for the month of February 1906—*contd.*

Particulars	Estimate	Expenditure during the month	Expenditure from 1st July	Total	Balance
		Rs. a p.	Rs. a. p.	Rs. a. p.	Rs. a. p.
(*d*) Drains, original					
Constructing tunnels over cross roads in IV Division		111 5 1	.....	111 5 1	.....
Constructing V-drain in new galli at Krishnasing lane		52 13 9	.....	52 13 9	.....
Constructing stone revetment over box drain in Sunnakalpet		76 1 10	.....	76 1 10	.....
Constructing a tunnel in Sheshadripuram ...		41 6 7	.....	41 6 7	.....
Constructing V-drain in Sheshadripuram ...		171 12 9	.....	171 12 9	.....
As per previous payment		.....	1,680 0 0	1,680 0 0	.....
Total ...		453 8 0	1,680 0 0	2,133 8 0	–2,133 8 0
(*e*) Drains, repairs	4,542				
Pay of drain Khalihaths		75 13 3	605 1 1	680 14 4	.....
Repairing drains in IV Division		177 3 3	72 9 7	249 12 10	.....
Do drain in new Guttahalli ...		55 14 5	.....	55 14 5	.....
As per previous payment		.....	257 10 9	257 10 9	.....
Total ...		308 14 11	935 5 5	1,244 4 4	3,297 11 8
(*h*) Buildings, original	2,000				
Improving new slaughter house		5 4 0	28 9 0	33 13 0	.....
As per previous payment		.....	326 3 8	326 3 8	.....
Total ...		5 4 0	354 12 8	360 0 8	1,639 15 4
(*i*) Buildings, repairs	3,500	.....	1,492 13 8	1,492 13 8	.....
Total ...		.....	1,492 13 8	1,492 13 8	2,007 2 4
(*j*) Watering roads and plants	1,500				
Watering avenue plants in Chamarajpete ...		20 8 10	146 5 1	166 13 11	.....
Do do in Fort		7 0 0	48 8 8	55 8 8	.....
Do do in I Division ...		7 0 0	46 4 4	53 4 4	.....
Do do in IV Division ...		7 0 0	48 12 3	55 12 3	.....
D Race-Course road		57 4 3	31 6 1	88 10 4	.....
Watering roads in VII Division ...		6 7 3	.....	6 7 3	.....
Maternity and other roads		52 11 9	21 12 9	74 8 6	.....
Do do II and III Divisions ...		41 2 6	.....	41 2 6	.....
Do do in VI Division ...		62 7 6	.....	62 7 6	.....
Do Post Office and other roads ...		34 0 10	.....	34 0 10	.....
Do Lal-Bagh road		57 13 8	48 10 0	106 7 8	.....
Do City Railway cross road ...		17 10 2	7 15 6	25 9 8	.....
As per previous payment		.....	.....	.....	.....
Total ...		371 2 9	399 10 8	770 13 5	729 2 7

Progress report for the month of February 1906—*concld.*

Particulars	Estimate	Expenditure during the month	Expenditure from 1st July	Total	Balance
		Rs. a. p.	Rs. a. p.	Rs. a. p.	Rs. a. p.
(*k*) Other works, original	500	...	16 6 11	16 6 11	.....
Total ...		...	16 6 11	16 6 11	483 9 1
(*l*) Other works, repairs	1,500				
Extending curb stones on City Railway cross road		38 4 6	.....	38 4 0	.....
As per previous payment		.....	1,018 2 7	1,018 2 7	.....
Total ...		38 4 0	1,018 2 7	1,056 6 7	443 9 5
(*m*) Compensation	3,000				
Paid to Bhaskar Panth Subbaiya for acquiring vacant land in Obayya gulli		10 0 0	.....	10 0 0	.....
Paid to Mangaiya Chetty, Venkata Subba Chetty and Sundramma for land in new Tharagupet		427 6 2	.....	427 6 2	.....
As per previous payment		.....	1,540 13 4	1,540 13 4	.....
Total ...		437 6 2	1,540 13 4	1,978 3 6	1,021 12 6
(*n*) Tools and plant	1,000				
As per previous payment		.....	407 8 7	407 8 7	.....
Total ...		.....	407 8 7	407 8 7	592 7 5
(*o*) Reserve	500				
Pay of Dharmambudhi tank watchman ...		3 7 8	.....	3 7 8	.....
As per previous payment		.....	38 9 7	38 9 7	.....
Total ...		3 7 8	38 9 7	42 1 3	457 14 9
(*p*) Roads, original	1,249				
Pay of Police guards over convicts ...		76 8 9	476 1 9	552 10 6	.....
Total ...		76 8 9	476 1 9	552 10 6	696 5 6
(*r*) Special works	10,000				
Opening out conservancy lane, (C. D.) in Subbramanya galli, III Division ...		.....	311 5 4	311 5 4	.....
Opening out Conservancy lane, E. F. in Subbramanya galli, III Division		.....	1,195 1 11	1,195 1 11	.....
Total ...		.....	1,506 7 3	1,506 7 3	8,493 8 9
VIII (*b*) Removing congestion	7,100				
As per previous payment		.....	141 4 5	141 4 5	.....
Total ...	..	.....	141 4 5	141 4 5	10,458 11 7
Grand Total ...	87,855	5,788 11 0	30,170 6 0	35,959 1 0	51,895 15 0

CITY MUNICIPAL ENGLISH SCHOOL, BANGALORE.

Return of class attendance and fee collections for the month of February 1906.

Class	No. on roll on first of month	No. admitted during the month	No. withdrawn during the month	No. on roll on last of month: Paying full fee	Half fee	Free	Total	Average attendance	Monthly fee	Collection during the month: Entrance fee	School fee	Arrears	Total paid into the Treasury	Fees in arrears	Remarks
									Rs. a. p.	Rs. a. p.	Rs. a. p.	Rs. a. p.	Rs. a. p.	Rs. a. p.	
Form III A	26	2	3	15	8	2	25	22·40	1 8 0	3 0 0	28 8 0	5 4 0	36 12 0	...	
Do B	23	8	...	27	3	1	31	26·50	1 8 0	12 0 0	42 12 0	8 4 0	63 0 0	...	
Do C	26	5	...	28	1	2	31	25·70	1 8 0	7 8 0	42 12 0	6 0 0	56 4 0	..	
Form II A	27	1	1	23	1	3	27	23·22	1 4 0	1 4 0	29 6 0	2 8 0	33 2 0	...	
Do B	22	10	...	20	6	6	32	25·71	1 4 0	12 8 0	28 12 0	3 12 0	45 0 0	...	
Do C	33	5	...	33	3	2	38	30·14	1 4 0	6 4 0	43 2 0	1 4 0	50 10 0	...	
Form I A	35	1	...	30	3	3	36	31·10	1 0 0	1 0 0	31 8 0	...	32 8 0	...	
Do B	39	5	.	29	..	6	35	29·95	1 0 0	5 0 0	29 0 0	2 0 0	36 0 0	.	
Do C	31	8	2	25	9	3	37	31·10	1 0 0	8 0 0	29 8 0	2 8 0	40 0 0	..	
Class Second A ...	19	6	(a) 3	20	...	2	22	18·30	0 12 0	4 8 0	15 12 0	0 12 0	21 0 0	..	(a) One paid and left
Do B ...	17	(b) 5	...	21	..	1	22	19·70	0 12 0	1 8 0	15 12 0	...	17 4 0	...	(b) Three were transferred from other sections.
Do C ...	21	4	2	22	1	...	23	19·30	0 12 0	3 0 0	16 14 0	3 0 0	22 14 0	...	
Class First A ...	7	14	1	19	1	...	20	14·28	0 8 0	7 0 0	9 12 0	0 12 0	17 8 0	...	
Do B ...	3	2	...	5	...	...	5	4·00	0 8 0	1 0 0	2 8 0	1 0 0	4 8 0	...	
II A.-H. Class ...	6	...	..	...	6	...	6	3·42	0 12 0	...	2 4 0	...	2 4 0	..	
I A.-H. Class ...	5	1	(c) 1	...	4	1	5	3·30	0 8 0	0 8 0	1 4 0	..	1 12 0	...	(c) One paid and left.
Total ...	331	77	13	317	46	32	395	328·12	...	74 0 0	369 6 0	37 0 0	480 6 0	Nil	Percentage of attendance=83·06.

CITY MUNICIPAL KANNADA SCHOOL, BANGALORE.

Return of class attendance and fee collections for the month February 1906.

Class	No. on roll on first of month	No. admitted during the month	No. withdrawn during the month	No. on roll on last of month: Paying full fee	Half free	Free	Total	Average attendance	Monthly fee	Collection during the month: Entrance fee	School fee	Arrears	Total paid into the Treasury	Fees in arrears	Remarks
									Rs. a. p.	Rs. a. p.	Rs. a. p.	Rs. a. p.	Rs. a. p.	Rs. a. p.	
V ...	9	4	2 (a)	9	...	2	1	10	0 4 0	1 0 0	2 8 0	..	3 8 0	...	One paid and left
IV ..	5	..	...	4	...	1	5	5	0 4 0	...	1 0 0	...	1 0 0	...	
III ..	11	2	2 (b)	11	...	...	11	8	0 3 0	0 6 0	2 7 0	...	2 13 0		Two do.
II A ..	9	1	1	7	1	1	9	8	0 3 0	0 3 0	1 6 6	...	1 9 6	..	
B ..	8	2	...	10	...	...	10	8	0 3 0	0 6 0	1 14 0	...	2 4 0	.	
I A ...	6	1	1	6	...	...	6	5	0 2 0	0 2 0	0 12 0	0 2 0	1 0 0	..	
B ..	8	2	1	8	...	1	9	6	0 2 0	0 4 0	1 0 0	...	1 4 0	...	
P. A .	5	2	1	6	...	...	6	6	0 2 0	0 4 0	0 12 0	...	1 0 0	..	
B ...	4	2	...	6	...	...	6	5	0 2 0	0 4 0	0 12 0	..	1 0 0	...	
C ...	2	...	...	2	...	...	2	2	0 2 0	..	0 4 0	...	0 4 0	..	
D ..	6	3	1	8	...	...	8	6	0 2 0	0 6 0	1 0 0	...	1 6 0	...	
Total ...	73	19	9	77	1	5	83	69	...	3 3 0	13 11 6	0 2 0	17 0 6	...	=83·1%

MUNICIPAL A.-V. SCHOOL, CHAMARAJENDRAPETE, BANGALORE.

Return of class attendance and fee collections for the month of February 1906.

									Rs. a. p.	Rs. a. p.	Rs. a. p.	Rs. a. p.	Rs. a. p.	Rs. a. p.	
English II ...	20	2	...	13	4	5	22	21	0 12 0	1 8 0	11 4 0	...	12 12 0	...	
Do I ...	11	7	1	14	..	3	17	15	0 8 0	3 8 0	7 0 0	..	10 8 0	...	
Kannada II ...	22	2	1	20	...	3	23	20	0 3 0	0 6 0	3 12 0	...	4 2 0	...	
Do I ...	18	4	3	15	1	3	19	15	0 3 0	0 8 0	1 15 0	..	2 7 0	..	
Infant B ...	20	5	...	21	...	4	25	22	0 2 0	0 10 0	2 10 0	...	3 4 0	..	
Do A ...	27	9	1	31	...	4	35	28	0 2 0	1 2 0	3 14 0	...	5 0 0	..	
Total ..	118	29	6	114	5	22	141	121	..	7 10 0	30 7 0	...	38 1 0	...	=85·8%

392

Statement showing the balance of materials at sites of roads for the month of February 1906.

Names of roads	Furlong	Balance			Receipts			Total			Issues			Balance			Remarks
		Laterite	Quarry metal	Gravel	Laterite	Quarry metal	Gravel	Laterite	Quarry metal	Gravel	Laterite	Quarry metal	Gravel	Laterite	Quarry metal	Gravel	
Railway approach road	...	25	...	...	...	...	...	25	..	...	4	...	...	21	...	...	
Avenue road ...	18	...	...	...	..	25	20	...	25	20	...	25	20	...	...	...	
Do	19	...	...		...	30	40	...	30	40	...	30	40	...	...	...	
Kemmangundi road .. .	3	...	...	3	...	...	...	...	...	3	...	...	...	...	..	3	
Taluk Cutcherry road	3	...	...	9	..	..	...	...	...	9	...	...	...	...	...	9	
Do	1	...	51	20½	...	13	18	...	64	38½	...	64	27½	...	...	11	
Avenue road	1	...	5	...	...	42	30	...	47	30	...	42	30	...	5	...	
Gundopantbulu road	2	...	5	...	...	..	...	...	65	...	.	...	...	...	5	...	
Sultanpet road	2	...	...	43	...	92½	..	...	92½	43	...	92½	43	...	...	...	
Woollen Mill road	...	...	...	64	...	...	...	...	...	64	...	..	42	..	...	22	
Vegetable market	...	...	...	14	...	...	...	...	...	14	...	...	14	...	...	..	
Hosur road	10	...	30	15	...	..	...	...	30	15	...	..	...	..	30	15	
Koracharpalya	1	...	22	20	...	...	...	...	22	20	.	14	..	...	8	20	
Mission road	1	...	...	5	...	..	...	...	...	5	...	..	5	...	...	...	
Kankanhalli road	4	...	73	24	...	...	..	...	73	24	...	...	...	...	73	24	
Mysore road	10	...	20	...	...	...	.	....	20	...	...	...	...	...	20	...	
Fort Rampart road	7	..	...	45	...	...	...	...	...	45	...	...	...	...	...	45	
Fort E Street	...	...	...	..	...	...	25	...	...	25	..	...	...	...	..	25	
Fort C lane	..	...	...	..	..	..	20	...	...	20	..	...	...	...	...	20	
Fort Main road	3	...	10	.	...	...	...	...	10	...	...	...		...	10	...	
Do	1	...	...	20	...	..	...	...	..	20	...	...	...	...	...	20	
V. Main road	2	...	...	...	..	70	35	.	70	35	..	...	...	...	70	35	
	...	25	216	232½	...	272½	188	25	488½	470½	4	267½	221½	21	221	249	
DEPOT MATERIALS.																	
Fort West Gate	.	..	...	36	...	20	...	...	20	36	.	15	6	...	5	30	
Lal-Bagh road	1	50	...	..	...	...	..	50	...	...	27	...	...	23	...	...	
Agrahara tank bund road	6	...	25	...	..	...	...	...	25	...	...	...	...	...	25	...	
Ulsoor Gate Depot	...	...	19⅓	...	7½	...	...	7½	19⅓	...	..	10⅓	...	7½	9	..	
Palace Upparhalli road	.	..	8	...	...	...	...	...	8		...	5	..	...	3	...	
Miller road	.	..	12	...	...	...	...	...	12	...	...	4	...	...	8	...	
Sankey road	...	..	13½	...	...	...	...	...	13½	...	...	3	...	...	10½	...	
Yelahanka gate	..	...	...	.	15	...	...	15	...	...	5	...	...	10	...	...	
Avenue road	12	.	.	...	15	...	...	15	..	...	6	...	...	9	...	...	
Race-Course road	8	...	...	...	50	...	...	50	...	...	...	...	...	50	...	..	
	..	50	77⅚	36	87½	20	...	137½	97⅚	36	38	37½	6	99½	60½	30	
Total ...	...	75	293⅚	318½	87½	292½	188	162½	586⅓	506½	42	304⅚	227½	120½	281½	279	

MEMORANDUM.

The following are the details showing the number and classification, etc., of reading visitors that attended the Srinivasa Mandiram Library, Bangalore City, during the month ending 20th February 1906 :—

Number of Newspaper Readers—680.
Number of Journals and Periodical Readers—425.
Number of Readers, Theosophical and Religious Journals—190.
Number of Readers, Books—185.
Total—1,470.

Statement showing rewards paid for destruction of Cobras, etc., during the month of February 1906.

Particulars	No.	Rate	Amount
		Rs. a. p.	Rs a. p.
Cobras	4	0 7 0	1 12 0
Do	1	0 5 0	0 5 0
Total ...	5	.....	2 1 0

2. Draft budget estimates for 1906-07 with Sub-Committee's report.

Resolved to be brought forward at the Adjourned Meeting to be held at 5-30 P.M. on Saturday the 31st instant.

3. Sub-Committee's report suggesting revision of establishment under several branches of the City Municipal service with a proposition statement embodying their proposals in order to introduce reform in the working of the Municipality, called for in para 13 of Government Order on the report of the Municipal Financial Committee.

Resolution.—Deferred to the next meeting.

4. Remission statements for arrears of Municipal taxes amounting to Rs. 1,308-4-3 irrecoverable on account of death, desertion and poverty of the parties concerned.

Resolution.—Sanctioned.

5. Proposal to modify Section 3 of Octroi Bye-Laws, which now applies to all dutiable articles, so as to limit its application to tobacco and betel-leaves only.

Resolution.—Passed.

6. Docket No. 458, dated 15th March 1906, from the Executive Engineer, Water-Supply and Stores Division, objecting to the water from the public stand-pipes being used for watering roads.

Resolution.—The Chief Engineer may be addressed to allow the same concession as given to the Civil and Military Station Municipality as regards watering roads.

7. Proposal to purchase a steam fire-engine for the City costing Rs. 4,000.

Resolution.—The Board is unanimously of opinion that there is urgent necessity of protecting the City from fires and therefore the proposition is approved.

8. The following orders of Government for being read and recorded :—

(1) Government Proceedings No. 8815-16—Ml. (384-05)-2, dated 27th February 1906, directing the maintenance of the roads in the new Extensions by Public Works Department up to the end of June 1907 and ordering the Municipality to make its own arrangements to maintain them out of Municipal Funds thereafter.

(2) Government Proceedings No. 9258—Ml. (450-05)-2, dated 9th March 1906, sanctioning the grant of 98 square yards of land in the bed of Agrahara tank to the Bangalore Woollen, Cotton and Silk Mills Co., Limited, at 8 annas a square yard.

(3) Government Proceedings No. 9263-6—Ml. (391-04)-8, dated 9th March 1906, granting a piece of land on the South Fort Glacis to the east of the Fort Centre Road and opposite to the Bangalore City Institute to Dewan Bahadur Mr. Raghunatha Rao for building a chattram.

(4) Government Proceedings No. 9650-1—Ml. (255-05)-4, dated 17th March 1906, granting two acres of land to the City Branch of the Theosophical Society on the South Fort Glacis to the east of the site granted to Dewan Bahadur Mr. Raghunatha Rao for a chattram.

(5) Government Proceedings No. 9608—Ml. (365-5)-4, dated 16th March 1906, sanctioning grant of land to Mr. Bronson on the Race Course Road to the south of 'Fairfield,' leaving a uniform width of 10 feet for the road berme.

Resolution.—Read and recorded.

9. Reappropriation Statement for the transfer of Rs. 3,500 to 'Drains, Original' out of the provision of Rs. 10,000 made under 'Removing congestion.'

Resolution.—Sanctioned.

10. Estimate amounting to Rs. 1,225 for opening out a conservancy lane between Thotadadevaramatt galli and Nasyada Pillannanagalli in the III Division, the charge to be met out of the special grant of Rs. 10,000.

Resolution.—Sanctioned.

11. Estimate amounting to Rs. 2,607 for the construction of botystalls near the New Slaughter-house.

Resolution.—Sanctioned.

Notice dated 30th April 1906.

The undermentioned gentleman having consented to stand as Municipal Commissioner for V. Nagarthpete Division, the voters of that Division are requested to present themselves at the Ulsurpete Police Station on Wednesday the 23rd May 1906, from 8 to 10 A.M. and from 3 to 5 P.M., to give their votes to the said gentleman. Printed tickets will be issued on the spot for the purpose:—

Serial No.	No. in the list published	Name	Place of residence
1	12	M. R. Ry. B. V. Ramaswami Chetti, B.A. ...	22, Yelaimalige Andanappa's lane.

In continuation of this office notice dated 24th April 1906, published in page 669, Part II of the *Mysore Gazette* dated 26th instant, the voters of VII. Fort and Chamrajpete Division are hereby informed that the undermetioned gentleman has also consented to stand as Municipal Commissioner for the VII. Division, in addition to that name which has been published in the above notice:—

Serial No.	No. in the list published	Name	Place of residence
2	149	M R.. Ry. B. Venkatapati Iyengar	21, V Main road, Chamrajendrapet.

Notice.

The following revised bye-law for the control of burial and burning grounds confirmed by Government in their Proceedings No. 9673-Ml. (177-05)-6, dated the 19th March 1906, is published for general information. It will come into force from 1st July 1906.

1. Every owner or person having control of any place used as a burial or burning ground shall cause the same to be registered, in a register which shall be kept in the Municipal office for that purpose, together with the names of the owner, and the persons having control thereof, and shall deposit in the Municipal Office at the time of registration, a plan of the said place showing the extent and boundaries thereof. A fee of Rs. 2 shall be paid for every such registration.

2. If it appears to the President that there is no owner or person having the control of any such place, the President shall assume control thereof and direct it to be registered, or may cause it to be closed.

3. Notice of the registration shall be affixed in English and in two vernacular languages, in some conspicuous place at or near the entrance to such places.

4. Whoever, after the registration of any such place, acquires by inheritance, transfer, or any other means, the ownership or control thereof shall, within one month of such acquisition, give information thereof in writing to the President.

5. The owner or the person having control of any such place shall, when so required by the President, give all information that may be required regarding the attendants employed, or the system of management followed therein, or any other matter connected with the control thereof.

6. The owner or any person having control of any such place shall cause the same to be kept at all times in a cleanly state, and free from noxious vegetation to the satisfaction of the President, and shall, if so required by the President by notice in writing, cause the same to be enclosed by a sufficient wall or fence.

7. The person having control of every such place shall give information within twenty-four hours to such person as may be appointed by the President in that behalf, and in such form as may be *prescribed* by the President, of all burials and burnings which take place therein.

8. No person shall bury, or cause to be buried, any corpse or part of a corpse in a grave whether dug or constructed of masonry or otherwise, in such manner that the surface of the coffin, or the surface of the body where no coffin is used, is at a less depth than five feet from the surface of the ground, and no grave shall be used for the burying of more than one corpse, except in the case of two or more members of one family being buried at the same time or in the case of sanction being obtained under para 10 to re-open an old grave or family vault.

9. No person shall build or dig, or cause to be built or dug any grave in any burial ground, at a less distance than two feet from the margin of any other existing grave.

10. No person shall, without the sanction in writing of the President, re-open a grave already occupied.

11. Whoever brings or conveys or causes to be brought, or conveyed, a corpse, or part thereof, to any burial or burning ground, shall cause the same to be buried, or burnt, within twelve hours after its arrival at such ground.

12. No person when burning or causing to be burnt corpse, or part of a corpse, in any burning ground, shall permit the same or any part thereof to remain without reducing the same to ashes.

13. No person shall act as Vettiyan or grave-digger in a Municipal burial or burning ground, without being licensed for that purpose by the President. Licenses granted for such purposes shall be in the form appended, and may be withdrawn or cancelled at the President's discretion.

FORM OF LICENSE TO BE ISSUED TO GRAVE-DIGGERS.

Under the provisions of the bye-law for the control of burial and burning grounds _____ is hereby licensed _____ to act as _____ at the _____ burial and burning ground on _____ road in the _____ Division, under the conditions named on the reverse hereof

President,

Conditions referred to.

This license may be withdrawn or cancelled on proof of the licensee—

(*a*) not being available, without reasonable excuse, at the said burial or burning ground at any time or times at which his services as _____ may be required by any member or members of the community usually resorting to it,

(*b*) or neglecting to do the duty usually required of him there, as such, on occasions of burial and burning,

(*c*) or causing, or permitting, or being a party to, any infringement of the rules laid down in the bye-laws for the control of burial and burning grounds, as far as they affect him, and his duties as such,

(*d*) or demanding, or attempting to extort, any higher fee than at the rates following, *viz*:—

	As.
For burial of a corpse of or under twelve years of age	8
For burial of a corpse above that age	12
For cremation of a corpse of or under twelve years of age including the milk ceremony, if any	3
Do do above that age, including as above ...	6
For supplying tools for the purpose of digging grave, etc., to those not otherwise requiring his services	1½

(e) or being guilty of any misconduct which, in the opinion of the President, requires the withdrawal of the license.

14. No person shall erect or build, or cause to be erected or built, any monument, tombstone, shrine, temple, building or enclosure, in any Municipal burial or burning ground without the sanction in writing of the President. A fee of eight annas per square foot or part of a square foot shall be paid by the applicant before such sanction is granted by the President. The President may cause anything so erected or built without his sanction, to be demolished.

15. Breach of any of these rules shall render the offender liable on conviction to a fine not exceeding Rs. 20.

The following revised rules for the regulation and control of hackney carriages within the limits of the Municipality of the City of Bangalore approved by Government in their Proceedings No. 7592—Ml. (181-05)-4, dated the 20th January 1906, are published for general information. They will come into force from 1st July 1906.

1. The owner of each hackney carriage shall be required to take out a license from the Municipality for that carriage.

2. Such license shall be issued from the Municipal Office after the carriage and horse or horses have been examined and approved by the President or Vice-President or any other officer that may be appointed by them in this behalf, who will determine the class to which the carriage shall belong.

3. There shall be three classes of licensed hackney carriages :—

1st class hackney carriages of all sorts excluding jatkas and carts drawn by bullocks or ponies.

2nd class jatkas, *i. e.*, two-wheeled bandies or carts drawn by ponies.

3rd class carts drawn by bullocks, and licenses shall be granted to owners subject to all the provisions contained in these Rules and to the following conditions :—

(1) That the carriage is in good order and repair in all its parts.

(2) That it is provided with two lamps in the case of carriages of the 1st and 2nd classes and with one lamp in the case of those of the 3rd class, which shall bear the carriage license number.

(3) That the horse is not or horses are not less than the height named in the class in which the vehicle is licensed, *i. e.*, 14-2 high for the 1st class and 11-3 hands for the 2nd class and that no animal shall be worked at less than three years of age.

4. The licenses for hackney carriages and drivers shall be in the form attached to these Rules and shall be printed on strong paper.

5. The fee for each carriage license shall be annually—

1st class—Rs. 9.
2nd class—Rs. 4.
3rd class—Rs. 2.

and for each driver's badge he shall pay a fee of one rupee. The driver's license to be given or renewed free of charge.

6. On receipt of license from the Municipal Office, the license-holder shall affix to his premises a board on which shall be printed his name and license number.

7. The horses to be used in licensed carriages shall be thoroughly broken to harness in good condition and fit for public use and free from sores.

The harness shall be complete and serviceable except in the case of carriages of 3rd class.

A whip as ordinarily used by coachmen to be with each driver. The use of sticks or leather straps is prohibited.

8. Two lamps lit with candles as ordinarily used shall be carried by 1st class hackney carriages; oil may be substituted for candles in the lamps of 2nd and 3rd class carriages, provided the light is bright.

The lamps to be in good order and wind-proof.

The one light to be carried by 3rd class hackney carriages shall be fastened when driving on the right hand side of the carriage and in a similar way to the lights of other hackney carriages.

9. The carriages to be kept in good repair and sound as to their springs, doors and windows.

The carriages shall be varnished occasionally as may appear necessary to the President or Vice-President or any other officer that may be appointed by them in this behalf.

10. It shall be lawful for the President or Vice-President or any other officer that may be appointed by them in this behalf and officers of S. P. C. A. and Inspectors of Police at any time between sunrise and sunset to enter any premises on which licensed vehicles, animals, harness, and other things used therewith are kept in order to carry out any provisions of those rules, and the proprietor or his agent shall afford every facility for inspection.

11. Licenses under these rules shall continue in force during the official year for which they are granted, but they are liable to revocation or suspension within that time by order of the President or Vice-President, Municipal Commission, on proof before him that the proprietor or his agent has been guilty of any breach of the conditions of the license.

12. As often as any licensee shall change his residence he shall give notice thereof in writing signed by himself to the President or Vice-President or any other officer that may be appointed by them in this behalf and on failure to give that notice for one week after his change of residence he shall be liable to a penalty of (Rs. 20) twenty rupees.

13. Each license shall bear a serial number and that number shall be painted in a conspicuous place in English on 1st class carriages and in English and Kanarese or Hindustani on 2nd and 3rd class carriages.

The President or Vice-President, Municipal Commission, may, on application, allow hackney carriages of a superior description to be sent out without being numbered.

The numbering shall be done at the Municipal Office and the cost shall be included in the license fee.

14. The driver or proprietor of a licensed carriage waiting on a public stand or publicly plying for hire shall at any time of the day or night be bound to give such carriage on hire to any person demanding the same unless for a good and sufficient reason the burden of proving which shall be on the driver or proprietor so refusing.

15. The Municipality shall, from time to time, appoint places as stands for licensed hackney carriages.

Drivers of such carriages found waiting for hire at places other than those appointed or leaving their carriages without some one in charge shall be liable to forfeit their licenses to drive.

The Registration of the order in which the hackney carriages shall rank on the stand shall be under the control of the Police.

Nothing herein contained is meant to interfere with passengers choosing their own carriages.

The list of stands as at present appointed is given at the end of these rules.

16. The following rates by time and distance shall be fixed for the various classes of hackney carriages :—

FARES BY TIME.

	For one hour or less			For every additional hour or part of an hour before midnight			For every additional hour or part of an hour after midnight			Remarks
1	2			3			4			5
	Rs.	a.	p.	Rs.	a.	p.	Rs.	a.	p.	
1st class, drawn by one horse	1	0	0	0	4	0	0	6	0	If drawn by a pair of horses; double these fares.
2nd class, Jatka do ...	0	6	0	0	3	0	0	4	0	
3rd class, bullock cart ...	0	4	0	0	2	0	0	3	0	

NOTE.—These fares are subject to a maximum of Rs. 3, 2-4-0 and 1-4-0 according to class for twelve hours from 5 A.M. to midnight and to a maximum of Rs. 4, 2-8-0 and 1-8-0, respectively, when the number of hours exceeds twelve.

FARES BY DISTANCE.

	1st class			2nd class, jatkas			3rd class, bullock carts		
1	2			3			4		5
	Rs.	a.	p.		Rs.	a.	p.	Rs.	a.	p.
For three miles and under ...	0	12	0	For a mile or portion of a mile.	0	2	0	0	1	6
For every succeeding mile or portion of a mile beyond a mile ...	0	3	0							

The above fares to be paid according to time, unless, at the commencement of hiring, the hirer expresses his intention of paying according to distance.

NOTE.—1. The same rate as that charged for 1st, 2nd, and 3rd class carriages from the several stands in the Civil and Military Station to the Pete shall be adopted *vice versa*.

2. Regarding a single seat to the Civil and Military Station in the 2nd or 3rd class carriage, the same rate as that charged in the Civil and Military Station for a single seat to the Pete shall be adopted.

17. The fare which may be demanded for the hire of a hackney carriage shall not exceed that specified in Rule 16.

NOTE.—Any contract entered into to accept a fare lower than that fixed by rules shall be binding.

18. The minimum speed at which a 1st or 2nd class carriage hired by time shall be driven is six and five miles, respectively, per hour, and a 3rd class carriage three miles per hour.

19. The maximum number of persons to be carried by each description of hackney carriage is as follows :—

In a four-wheeler, four persons inside and driver and boy outside.
A wagonette with one horse, six persons including syce and driver.
A jatka five persons, including the driver
Two children under ten years of age to be reckoned as one adult person.

20. The maximum load of luggage only or of luggage and passengers which may be carried by each description of carriage shall be as follows :—

Carriage, 1st class, drawn by one horse ...	... 8	maunds or	672 lbs.
By two horses ...	... 15	do	or 1,260 lbs.
2nd class, jatkas	... 6	do	or 504 lbs.
3rd class, bullock carts	... 5	do	or 420 lbs.

When passengers or luggage are carried, each adult person shall be considered as weighing $1\frac{1}{2}$ maunds or 126 lbs. and each child under ten years of age as weighing three-quarters of a maund or 63 lbs.

21. Every licensed hackney carriage shall have affixed in it a list of the fares prescribed in the following rules.

Such list shall be printed in English, Kanarese and Hindustani.

One copy shall be provided yearly at the time of licensing by the Municipal President or Vice-President, but the renewal of a list which has become destroyed or defaced shall rest with the proprietor who shall renew it at once.

Copies will be supplied on payment at the Municipal Office and Head Police Station.

22. Every driver so licensed shall wear, while at a stand or driving a licensed carriage or plying for hire, a brass badge on his right arm bearing his name and the number of his license; and all hackney carriage licenses shall be produced for inspection when required by any Police officer or Municipal S. P. C. A. officer.

23. No person shall be allowed to act as the driver of a licensed vehicle except under a driver's license granted to him on that behalf by the President or Vice-President, Municipal Commission.

24. A driver's license is not transferable and shall be granted for the official year.

25. A driver's license shall not be granted to any one under eighteen years of age and who has not been approved by the President or Vice-President or any other officer that may be appointed by them in this behalf.

26. Property found in licensed hackney carriages shall be deposited at the nearest Police Station by the proprietor or driver of such carriages. A list of such property shall be posted up at the Municipal Office and at such other places as the President or the Vice-President may direct.

27. Application for the renewal of licenses shall be made one month before the expiry of the year of license, and the renewed license shall be granted in the same way by the same officer provided for in Rule 1 and on payment of the same fee as for the original license.

28. When a licensed hackney carriage is transferred to a new proprietor during the year of license, he shall at once report the change to the Municipal Office for the necessary alterations to be made (free of charge) in the license.

29. Any proprietor or agent of the proprietor or driver of a licensed vehicle who knowingly permits it to be drawn by a less number of horses than is provided in the license, or knowingly permits more passengers or a greater weight to be carried in such carriages than is permitted by those rules, shall be liable to a fine which may extend to Rs. 50 and to forfeiture of his license.

30. Any driver who cruelly beats, ill-treats, over-drives or otherwise misuses any horse driven in a licensed vehicle, shall be liable to forfeiture of his license to drive, in addition to any other punishment to which he may be liable under any law in force for the time being.

31. The President, may, by written order, suspend for a period not exceeding one month, or revoke any license granted to the owner or driver of a hackney carriage for any breach of the Hackney Carriage Rules. The license shall also be subject to suspension or revocation, if the President is satisfied that the owner or driver has misconducted himself.

32. Prosecutions for breach of these rules may be instituted by any passenger, Police officer, or any other officer appointed by the President or Vice-President in this behalf.

List of Stands.

1. The City Railway Station.
2. Vacant ground on side of Fort road and opposite Bamboo Bazaar Pete.
3. Do at Yelahanka gate.
4. Do at Nagarthpete.

Owner's License.

Hackney Carriage License No.....

Class.....

By virtue of the powers vested in me by the Bangalore City Hackney Carriage Regulation, 1887, and Rules of 1905, I grant to you.....of.....this license to keep at your premises at.....and to let for hire the numbered .....as above from the date hereof till the 30th June 19.....

1st That it shall be drawn by.....

2nd. That it shall carry such number of passengers not exceeding.....as may be required, and shall also carry free of charge a reasonable quantity of luggage.

3rd. That it shall ply for hire in Bangalore City.

4th. That it shall be produced for inspection at such place and time as may be directed by me.

5th. That in the event of its being damaged, you may, with my previous sanction in writing, use temporarily another carriage to which this license number shall be transferred free of charge.

6th. That you shall keep it, together with the horse (s) and harness used therewith, in proper and serviceable condition.

7th. That as often as you change your residence or the premises in which you keep this carriage, you shall give me notice thereof in writing within one week of such change, submitting at the same time this license for the necessary alteration.

8th. That you shall affix in the carriage a list of fares in English, Kanarese and Hindustani and do not demand a higher fare than that mentioned in the said list. Any contract entered into to accept a fare lower than that fixed by Rules shall be binding on you.

9th. That this license shall not be transferred to any other person without my written sanction.

10th. That this license shall be liable to suspension or revocation for any breach of the above conditions or of Hackney Carriage Rules or misconduct.

Given under my hand and seal this.....day of..... .....

President, Municipal Commission,
Bangalore City.

Driver's License No.....

By virtue of the powers vested in me by the Bangalore City Hackney Carriage Regulation, 1887, and Rules of 1905, I grant to you..... ..of this license to ply for hire and pursue the occupation of driver in the service of hackney carriage owner.....in any part of the Bangalore City from the date hereof till the 30th June 19.....on the conditions hereunder written :—

1st. That you shall constantly, when engaged in the said occupation, wear conspicuously on such part of your person as the President shall direct, a metal badge numbered as above.

2nd. That you shall at all times, when engaged in your said occupation, have with you this license and shall produce the same when required by any passenger, Police officer on duty or any person employed by the Hackney Carriage Department.

3rd. That you shall, when engaged for hire, drive Mr. .....'s carriage to any place within the Municipal limits of the Bangalore City to which you may be required by the hirer thereof to drive.

4th. That you shall not, when engaged for hire, leave this carriage without the permission of the hirer or wilfully desert from such hiring before being discharged by the hirer.

5th. That you shall affix in the carriage a list of fares in English, Kanarese and Hindustani and do not demand a higher fare than that mentioned in the said list. Any contract entered into to accept a fare lower than that fixed by Rules shall be binding on you.

6th. That this license shall be liable to suspension or revocation for any breach of the above conditions or of Hackney Carriage Rules or misconduct.

7th. That this license or its accompanying badge be not transferred to any other person except at the request of the owner of this carriage and with my written sanction.

Given under my hand and seal this..... ..day of.....

President, Municipal Commission,
Bangalore City.

BANGALORE CITY MUNICIPALITY.

Notice, dated the 14th April 1906.

The following cast-iron lamp-posts and lanterns are available for sale in the Bangalore City Municipality :—

Serial No.	Description	Height		Per	Rate	Number available
		Feet	Inches		Rs. a. p.	
1	Plain pillar with short bottom	7	10	Each ...	9 0 0	37
2	Do with long bottom	7	10	Do ...	11 4 0	13
3	Fluted pillar, circular base, light	10	...	Do ...	12 12 0	60
4	Do do heavy	9	6	Do ...	18 12 0	12
5	Do do extra heavy	10	...	Do ...	21 12 0	5
6	Do octagonal base	9	6	Do ...	18 0 0	183
7	Plain pillar, square pedestal	9	6	Do ...	22 8 0	19
	Semi-fluted and plain pillar	9	9	Do ...	15 12 0	23
9	Large, ornamental pillar for single lamps	8	10	Do ...	22 8 0	15
10	Lanterns, second-hand	...	...	...	1 12 6	200

N. B.—Delivered free at the Railway Station, packing charges and risk of breakage to be borne by purchasers.

A. S. NAGAVKAR,
President.

Item Nº 6 Fluted Pillar (octogonal Base)

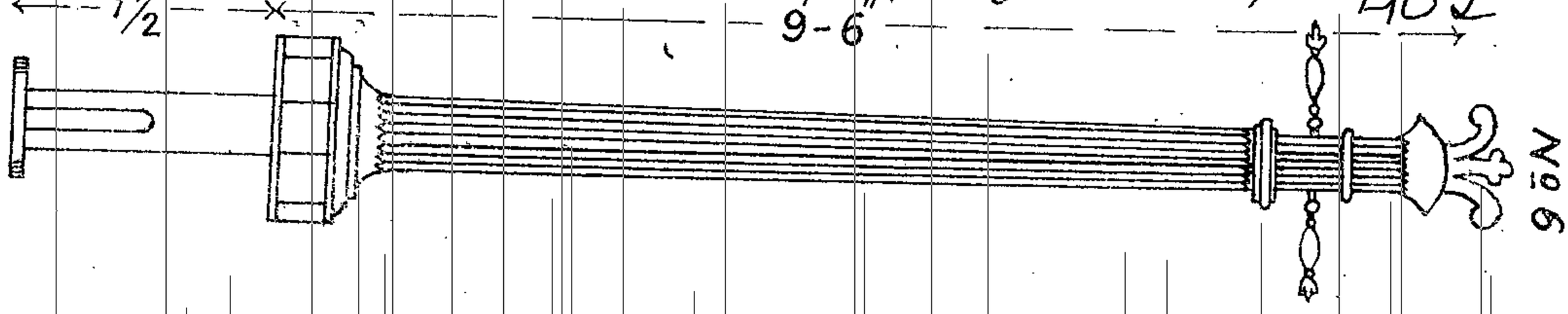

Item Nº 9 Large ornamental Pillar for single lamps.

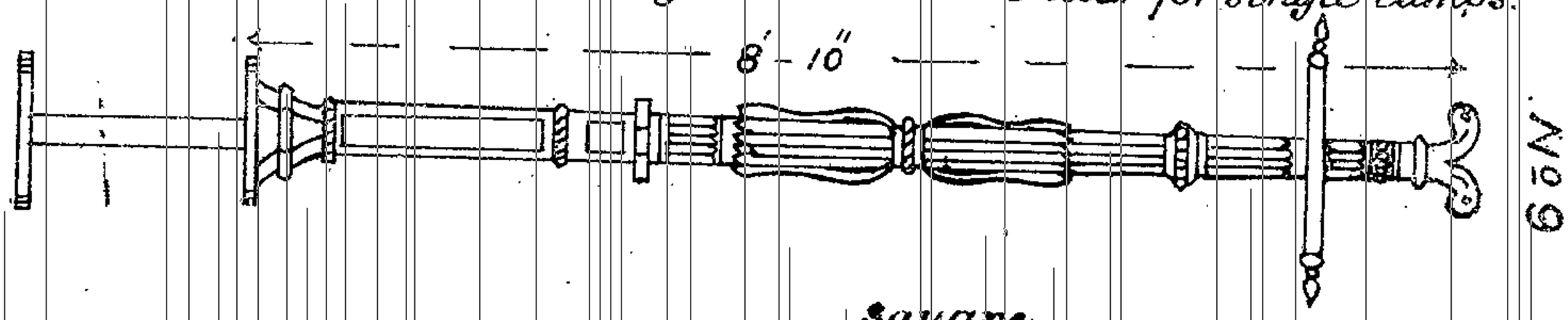

Square
Item Nº 7 Plain Pillar Pedestal.

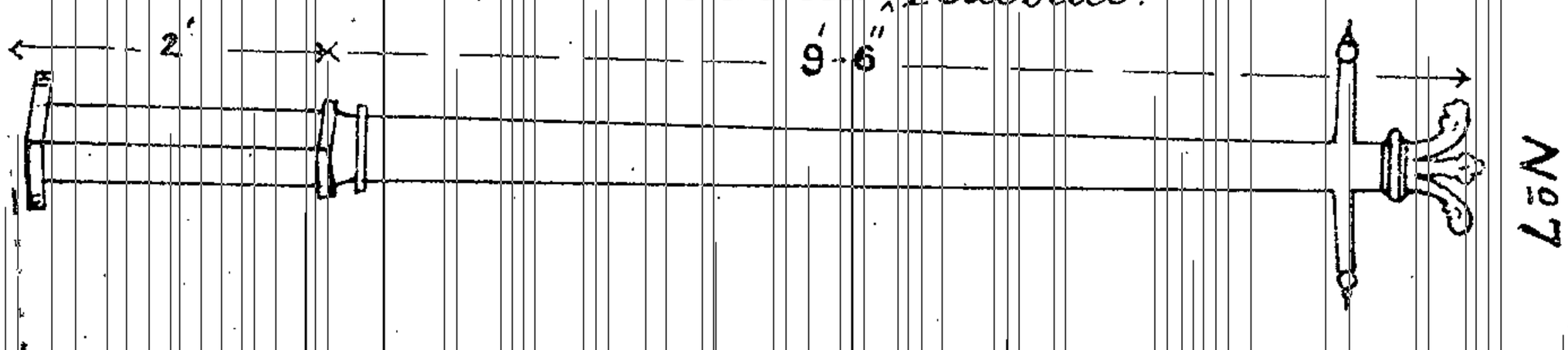

Item Nº 1 Plain Pillar

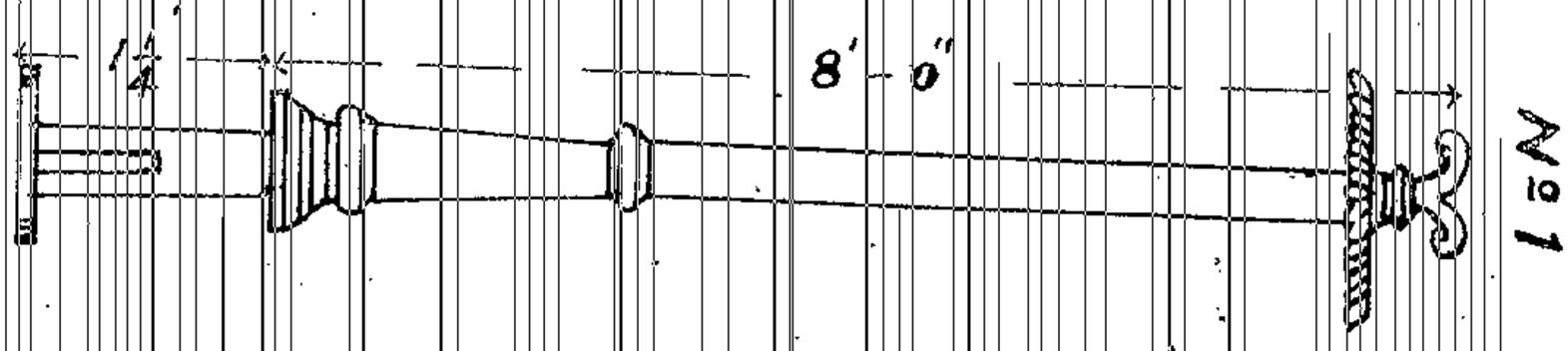

Item Nº 2 Plain Pillar with long bottom

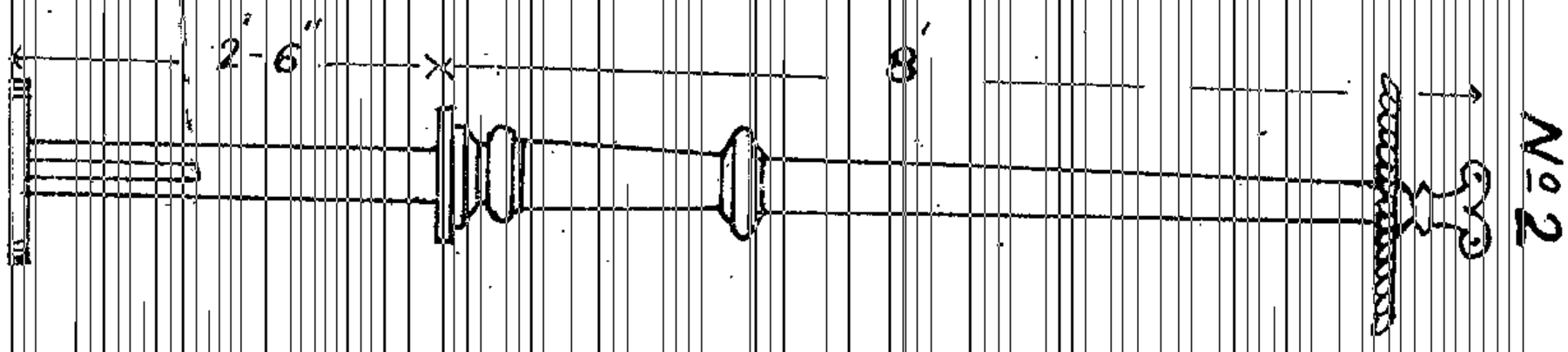

Item Nº 8
Semi Fluted and Plain Pillar

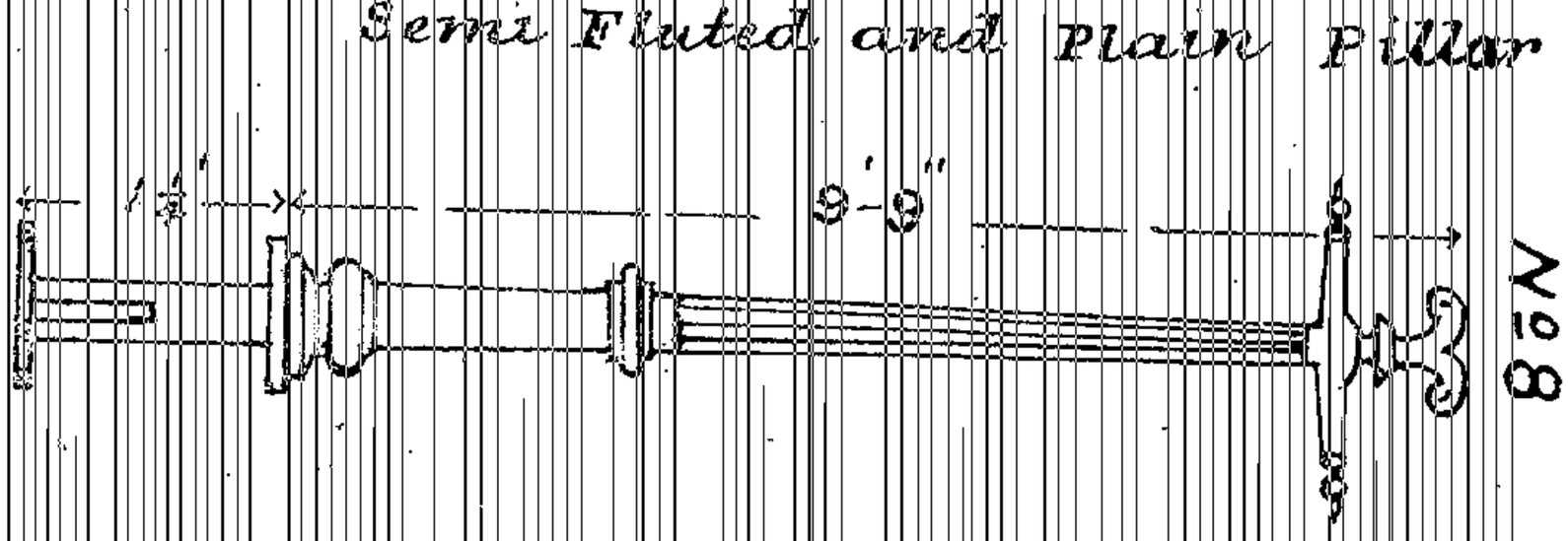

Nº 3 Fluted Pillar circular base (light)

THE AGRICULTURAL EXHIBITION AND CATTLE SHOW, CONJEEVERAM.

30th May 1906 *to 5th June* 1906.

RULES FOR THE GUIDANCE OF EXHIBITORS AND OTHERS.

1. The Exhibition will be opened on Thursday 30th May 1906 and it will continue open every day from 7 A.M. to 6 P.M. till the 5th June 1906.

2. The Exhibition Authorities reserve to themselves the right of allotting or refusing space for and admitting or rejecting any particular exhibit and of revoking any pass given hereunder.

3. Each intending exhibitor is requested to apply to the Secretary of the Exhibition Committee not later than the 5th May 1906 for the allotment of the space required.

4. Each exhibitor will be given a pass by the Secretary showing the registration of his application and the amount of space allotted to him.

5. The space allotted but not occupied by the exhibitors before the 30th May 1906 will be otherwise used by the Committee.

6. The reception of exhibits will commence on the 10th May 1906 and will continue every day till the 25th May 1906 and even later at the discretion of the Secretary. But perishable articles such as fruits, vegetables, greens and dairy produce will be received up to 6 A. M. on the 30th May 1906.

7. Exhibits should be sent well packed and addressed to the Secretary of the Exhibition Committee. Each package should be accompanied by a list of the exhibits inside and should show the name and residence of the sender.

8. Exhibitors if they so wish it, may bring their exhibits personally or send them through authorized agents.

9. All exhibits when sent should have attached to them labels bearing the name of the exhibit, the name and address of the exhibitor or manufacturer, the locality of production and the group and class, and stating whether the exhibit is for sale or not, and if for sale the price and whether it is for competition or not. Labels will be supplied on application to the Secretary.

10. The Exhibition Authorities will provide necessary housing accommodation and take precautions to preserve exhibits from injury and guard the premises of the Exhibition and generally afford every facility to exhibitors or their agents in connection with the transport, display, sale and care of their exhibits. But they do not hold themselves responsible for any damage or loss arising from any cause whatsoever.

11. Exhibitors must ordinarily bear all expenses for conveying to and removing from the stalls in the exhibition grounds their exhibits. But in special cases the Exhibition Authorities will pay such expenses on proper application being made in advance for it.

12. The Exhibition Authorities will provide ordinary stalls for the display of exhibits but any arrangement requiring special construction, stands, cases, stalls, shelves, etc., and the mounting of machinery and apparatus and any special decoration of stalls should be carried out by the exhibitors at their own cost but in accordance with plans approved of by the Exhibition Authorities. The Exhibition Authorities may make arrangements for the above provided that application for it is made in time and estimated costs are paid in advance.

13. If any exhibitor requires steam or other motive powers or any other special accommodation for the display of his exhibits special mention should be made of the same in his first application for allotment of space.

14. The Secretary of the Exhibition Committee may, on application, give passes to any assistants, servants or other attendants who, he thinks, are necessary for attendance at the stalls of any exhibitor, permitting them to enter the Exhibition grounds during the course of the Exhibition. Such attendants shall obey the orders of the Exhibition staff.

15. The Exhibition Authorities will award gold or silver medals, money prizes and Certificates of Merit for deserving exhibits in the different classes. Judges will be chosen to make the awards. Competing exhibitors shall submit their exhibits to the said Judges and shall furnish samples, if required, at least three clear days before the Exhibition is opened.

16. Exhibits are not to be removed by the exhibitors from the Exhibition grounds during the Exhibition, but must be removed within seven days after the close of the Exhibition after which period they will be removed and stored at the risk and expense of the exhibitor. Any exhibit not claimed and removed by the exhibitor before the 15th June 1906, will be sold and the proceeds disposed of by the Exhibition Committee as they think fit.

17. Exhibits may be sold during the Exhibition subject to the rules that may be framed in that behalf, but they shall not be removed till after the close of the Exhibition.

18. Exhibitors who are unable to attend in person or send their agents may arrange with the Secretary for the Exhibition for the return of their goods subject to these rules and on payment in advance of the estimated costs and charges which may be ascertained from him.

19. The Secretary of the Exhibition Committee shall have the right to cause the removal of the exhibits of any exhibitor who does not conform to these rules.

20. The Exhibition Committee shall reserve to themselves the power to alter or revoke any of the above rules or frame any rules they think fit, due notice of which will be given in the newspapers.

21. All who become exhibitors shall be held by so doing to signify their compliance with the whole of these rules and any other rules the Exhibition Committee may issue from time to time.

22. All articles of indigenous growth or manufacture and natural or agricultural products from all parts of India, Burma and Ceylon will ordinarily be admitted, to the Exhibition. Foreign articles will not, ordinarily, be admitted, but tools, implements and machinery of foreign manufacture, used or likely to be used for starting or developing indigenous industries, will be accepted as also foreign products that may, in the opinion of the Committee, serve as useful models for imitation. Processes of manufactures that are now or may hereafter be carried on in India, may also be exhibited. No awards will, however, be made or prizes given for foreign manufactures or processes.

23. The Committee will not undertake to feed any live-stock exhibited but will make arrangements for the supply of all materials necessary for feeding purposes.

24. The Committee will exact a fee of five per cent upon all sales for the benefit of the Exhibition Fund.

25. Admission into the Exhibition ground shall be only by tickets which will be sold at rates to be fixed later on.

26. The classes of articles noted in the sheet annexed to this shall be exhibited but the Committee may, in their discretion, admit other exhibits under special circumstances.

27. The above rules do not apply to exhibits sent by the Madras Government or any other Government in India, or by Government Institutions or by Government of Native States and Local Bodies.

CONJEEVERAM,
2nd December 1905.

V. VENKATACHARI,
Secretary.

LIST OF GROUPS AND CLASSES OF EXHIBITS.

GROUP No. I.—LIVE STOCK.

(*a*) Cattle. (*b*) Horses and ponies. (*c*) Sheep and goats. (*d*) Poultry.

GROUP No. II.—AGRICULTURAL IMPLEMENTS.

(*a*) Prime Movers.
(*b*) Implements of tillage.
(*c*) Implements of sowing.
(*d*) Implements for irrigation.
(*e*) Harvesting Machine.
(*f*) Implements for preparing produce for the market.
(*g*) Agricultural carriage.
(*h*) Dairy implements.
(*i*) Miscellaneous implements.

GROUP No. III—AGRICULTURAL AND DAIRY PRODUCE AND RAW MATERIALS.

Section A—

1. Country Dairy produce
2. Grain.
3. Pulse.
4. Tubers.
5. Fibres.
6. Cotton and wool.
7. Dyes.
8. Oil seeds.
9. Sugar-cane and raw sugar.
10. Tobacco.
11. Honey and wax.

Section B.—Raw material used for food, manufactures, Pharmacy, etc.

(*A*) *Chemical and pharmaceutical substances.*

1. Animal. 2. Vegetable. 3. Mineral.

(*B*) *Substances used for food and manufactures.*

1. Dried fruits, preserved pickles.
2. Saccharine produce.
3. Fixed oils.
4. Essential oils.
5. Dyes.
6. Mordants.
7. Miscellaneous.

GROUP No. IV—MANUFACTURES.

Section A—

1. Cotton fabrics.
2. Woollen fabrics.
3. Silk fabrics and other textiles.
4. Fibrous Manufactures.
5. Hardware and Cutlery.
6. Porcelain and Pottery (including bricks and tiles)
7. Paper.
8. Matches, soaps and other articles of Indian make.
9. Mats.
10. Fine Art productions.
11. Leathers.
12. Brass and other Metallic works.

Section B—All sorts of fibres.

GROUP No. V.

(*a*) Manures.
(*b*) Pictures and diagrams of implements, grown crops and agricultural operations.

GROUP No.VI.

Forest produce.

MYSORE GOVERNMENT STATIONERY DEPARTMENT.

Notice dated 27th *April* 1906.

Offers are invited by the undersigned for the supply of about 300 empty dealwood cases, large and small, measuring as per margin, or the nearest thereto, required by the Government Stationery Depôt, during the official year 1906-07.

Length.		Breadth.		Height.
2′—10″	×	2′—1″	×	1′—10″
3′— 3″	×	2′—2″	×	2′— 3″

Offerers should quote rates for each box which the approved contractor will be required to deliver at the Stationery office within three days from the date of order.

Letters should be addressed to the Superintendent of Stationery, Mysore Government, Bangalore, and should reach his office on or before the 10th May 1906, accompanied by a deposit of Rs. 25 which will be returned to all unsuccessful contractors after the disposal of tenders, the earnest money tendered by the approved contractor alone being retained as security for the due carrying out of his contract.

C. H. YATES, *Supt. of Stationery.*

Notification No. 199, *dated* 23*rd April* 1906.

The following Co-operative Societies have been registered under Section 6 clause (2) of the Mysore Co-operative Societies Regulation, III of 1905, with effect from the date mentioned against each of them :—

No.	Name	Place	Date of registration
1	"The Bangalore City Co-operative Society," Limited.	Bangalore City ...	9th December 1905.
2	"The Whitefield Co-operative Society," Limited.	Whitefield ...	14th do "
3	"The Hole-Narsipur Agricultural and Industrial Co-operative Society," Limited.	Hole-Narsipur ...	17th April 1906.
4	"The Mysore Co-operative Society," Limited.	Mysore ...	20th do "

M. SHAMA RAO,
Registrar of Co-operative Societies in Mysore.

MYSORE CITY TELEGRAPH OFFICE.

List of undelivered Telegrams for the week ending 30*th April* 1906.

	Station	Address	Remarks
1.	Salem ...	Sankariah, Mandi Mohalla Street ...	Addressee left station new address not known.
2.	Kovvur, S. M. ...	Rangasami, Executive Engineer office, Mysore, Madras.	Address insufficient, party not traceable in any of the Executive Engineer's offices here.

P. L. BHAGVAT,
Offg. Tel. Master.

OFFICE OF THE COMPILER "MYSORE GAZETTE."

NOTICE.

RATES FOR CIVIL COURT, &c., NOTICES.

Particulars	1st insertion		2nd and subsequent insertion	
	Rs.	a.	Rs.	a.
Notices by Civil Courts of Applications for Certificates under Act XXVII of 1860	2	8	1	4
Notices by Civil Courts of Insolvency Application under Section 347 of Civil Procedure Code	5	0	2	8
Insolvency Orders issued by the Civil Courts under Section 354 of the Civil Procedure Code	*Free.*			
Notices issued by Revenue Officers for the grant of duplicate coffee pattas, &c. ... ... per page...	10	0	5	0

RATES FOR PRIVATE ADVERTISEMENTS.

1st insertion As. 8, 2nd insertion As. 6, and 3rd and subsequent insertions As. 4 per line

When Postage labels are sent in payment of subscription, etc., one anna extra per rupee should be added.

NOTICE.

No. 1.—The *Mysore Gazette* is published at Bangalore every Thursday. Application for the supply of the Gazette on *Public Service* should be addressed to the Secretary to the Government of Mysore, General and Revenue Department. Postage is not charged for places within the Mysore Province. All subscriptions and advertisement charges are payable *in advance.*

No. 2.—It is hereby notified that, as Government Treasuries in Mysore are authorized to receive and credit Gazette subscriptions as well as publication charges remitted by Courts, all such moneys should be sent to Treasuries and only Treasury receipts forwarded to this office. No money orders will be received by the undersigned except from outside the Province.

Charges of private advertisements must be forwarded to this office.

No. 3.—Much inconvenience is caused in this office by subscribers not giving their full and correct addresses, and writing illegibly on the money order coupons, which are unfit for record.

No. 4.—Communications on post-cards or on paper less than half a sheet of foolscap will not receive attention.

No. 5.—An efficient system of check and counter-check is maintained over the despatching of Gazette copies forwarded through Post. No responsibility will be accepted when copies miscarry, or are not delivered to addressees, and such losses will not be replaced by duplicate copies.

No. 6.—Complaints regarding non-receipt of the Gazette should be forwarded to the undersigned within a week after the date on which it is due.

No. 7.—Copy is sometimes sent to the Press late on Wednesday evenings for publication in the next day's Gazette. This involves considerable inconvenience to the Press and expense to Government. It is therefore notified that all matter intended for publication in Parts II, III and IV should reach this office not later than Tuesday evening; and that for Part I not later than the forenoon of Wednesday, for the following Thursday's issue of the Gazette.

No. 8.—It is requested that Departments will refrain from sending to the Press any matter for publication as extremely urgent later than 12 noon on Tuesdays, when such matter can without inconvenience be held over for the next week's Gazette.

No. 9.—Spare copies of notifications, etc., are often asked for long after their publication when the matter has been broken up, necessitating its resetting, causing inconvenience to the Press and waste of money. It is therefore requested that when spare copies are wanted, a note to that effect, stating the number of copies, be made at foot of such notification, etc.

No. 10.—If no instructions, either at foot of notifications, or separately by docket, accompany any matter, it will be printed in the language in which it is written, and published only once.

C. H. YATES,
Compiler, Mysore Gazette.

MYSORE GOVERNMENT METEOROLOGICAL DEPARTMENT.

Daily Means of Observations for the Week Sunday 15th to Saturday 21st April 1906.

No.	BANGALORE	Sunday 15	Monday 16	Tuesday 17	Wednesday 18	Thursday 19	Friday 20	Saturday 21
1	Barometer red. to 32° F.	26·883	26·882	26·884	26·861	26·872	26·895	26·928
2	Daily Barometric range	·128	·124	·142	·155	·155	·124	·133
3	Mean Dry Temperature in shade	85·1	84·8	84·7	84·6	83·7	84·1	84·0
4	Maximum do	98·6	97·7	99·0	98·8	97·0	98·2	96·0
5	Minimum do	72·8	72·0	70·8	71·6	70·5	70·6	72·5
6	Daily range of do	25·8	25·7	28·2	27·2	26·5	27·6	23·5
7	Mean Wet Temperature in shade	64·9	66·9	68·6	68·7	69·7	69·9	70·1
8	Minimum do	60·3	60·4	63·7	65·3	67·8	67·4	67·1
9	Pressure of Aqueous Vapour	·403	·529	·561	·537	·555	·574	·612
10	Humidity	31	46	48	45	49	50	57
11	Wind Vely. in Miles p. day to 8 A. M	148	165	194	190	215	192	169
12	Mean Wind Direction	S b E	S S E	W S W	W S W	W	S b W	S S W
13	Rainfall in inches to 8 A.M.	0	0	0	0·02	0·07	0	0
14	Total Rainfall from 1st January	1·64	1·64	1·64	1·66	1·73	1·73	1·73
15	Per cent of Cloudy Sky	0	10	3	20	10	17	80
16	Character of Weather	Dust haze	Dust haze	Dust haze	Dust haze	Thunderstorm	Threatening	Distant thunder

MYSORE GOVERNMENT METEOROLOGICAL DEPARTMENT.

Daily Means of Observations for the Week Sunday 15th to Saturday 21st April 1906.

No.	MYSORE	Sunday 15	Monday 16	Tuesday 17	Wednesday 18	Thursday 19	Friday 20	Saturday 21
1	Barometer red. to 32° F.	27·359	27·357	27·367	27·364	27·347	27·375	27·414
2	Daily Barometric range	·145	·163	·164	·137	·183	·160	·154
3	Mean Dry Temperature in shade	84·7	85·5	85·4	83·8	85·2	84·9	85·9
4	Maximum do	99·6	100·9	99·0	98·0	98·1	99·0	99·5
5	Minimum do	70·6	71·0	71·8	72·1	73·2	72·6	74·0
6	Daily range of do	29·0	29·9	27·2	25·9	24·9	26·4	25·5
7	Mean Wet Temperature in shade	70·0	70·6	70·5	70·9	68·7	70·4	71·1
8	Minimum do	68·3	67·1	67·9	67·3	68·1	68·8	68·0
9	Pressure of Aqueous Vapour	·559	·597	·575	·607	·511	·568	·623
10	Humidity	48	50	48	49	44	47	50
11	Wind Vely. in Miles p. day to 8 A.M.	243	244	285	258	306	262	286
12	Mean Wind Direction	S	S b E	S b W	W	W b S	S W b S	S b W
13	Rainfall in inches to 8 A.M.	0	0	0	0	0	0	0
14	Total Rainfall from 1st January	0·83	0·83	0·83	0·83	0·83	0·83	0·83
15	Per cent of Cloudy Sky	7	10	10	30	63	27	100
16	Character of Weather	Fine clear	Fine passing clouds	Fine passing clouds	Fine	Fine	Fine	Cloudy

1108

MYSORE GOVERNMENT METEOROLOGICAL DEPARTMENT.

Daily Means of Observations for the Week Sunday 15th to Saturday 21st April 1906.

No.	HASSAN	Sunday 15	Monday 16	Tuesday 17	Wednesday 18	Thursday 19	Friday 20	Saturday 21
1	Barometer red. to 32° F.	26·825	26·826	26·835	26·839	26·826	26·847	26·877
2	Daily Barometric range	·116	·124	·124	·112	·143	·117	·132
3	Mean Dry Temperature in shade	82·1	81·8	82·9	81·3	82·6	81·9	83·0
4	Maximum do	99·2	98·7	98·9	96·7	98·4	99·3	98·0
5	Minimum do	66·3	68·1	69·3	68·8	68·7	67·7	70·1
6	Daily range of do	32·9	30·6	29·6	27·9	29·7	31·6	27·9
7	Mean Wet Temperature in shade	67·2	70·0	69·5	69·6	69·4	67·1	69·1
8	Minimum do	65·0	66·2	65·9	65·4	65·2	64·3	64·8
9	Pressure of Aqueous Vapour	·475	·585	·561	·560	·562	·501	·574
10	Humidity	40	49	46	44	48	44	46
11	Wind Vely. in Miles p. day to 8 A.M.	59	66	93	121	132	86	82
12	Mean Wind Direction	W b S	W	W b S	S W	W	W	N b W
13	Rainfall in inches to 8 A.M.	0	0	0	0	0	0	0
14	Total Rainfall from 1st January	0·03	0·03	0·03	0·03	0·03	0·03	0·03
15	Per cent of Cloudy Sky	20	17	20	7	50	20	70
16	Character of Weather	Fine; sultry	Dust storm	Dust haze; sultry	Sultry	Fine; sultry	Fine; sultry	Fine; sultry

MYSORE GOVERNMENT METEOROLOGICAL DEPARTMENT.

Daily Means of Observations for the Week Sunday 15th to Saturday 21st April 1906.

No.	CHITALDRUG	Sunday 15	Monday 16	Tuesday 17	Wednesday 18	Thursday 19	Friday 20	Saturday 21
1	Barometer red. to 32° F.	27·442	27·443	27·455	27·450	27·451	27·471	27·500
2	Daily Barometric range	·138	·123	·139	·133	·169	·129	·143
3	Mean Dry Temperature in shade	87·8	87·6	85·7	85·0	85·6	86·1	85·5
4	Maximum do	102·0	100·3	99·5	98·0	100·0	101·3	99·6
5	Minimum do	74·6	75·8	72·5	72·3	71·8	71·7	72·0
6	Daily range of do	27·4	24·5	27·0	25·7	28·2	29·6	27·6
7	Mean Wet Temperature in shade	67·7	68·3	70·0	69·9	68·1	66·5	66·2
8	Minimum do	64·0	64·9	68·3	68·3	67·3	62·9	61·5
9	Pressure of Aqueous Vapour	·458	·485	·526	·556	·476	·456	·480
10	Humidity	35	38	41	45	41	38	39
11	Wind Vely. in Miles p. day to 8 A. M.	143	134	180	186	221	165	148
12	Mean Wind Direction	N W b N	S S W	W b N	W N W	W b N	N N W	N b W
13	Rainfall in inches to 8 A. M.	0	0	0	0	0	0	0
14	Total Rainfall from 1st January	1·24	1·24	1·24	1·24	1·24	1·24	1·24
15	Per cent of Cloudy Sky	17	10	0	3	0	0	67
16	Character of Weather	Fine; sultry	Sultry	Dust haze; sultry	Fine clear; sultry	Fine clear	Fine clear	Fine; sultry

Dated 26th April 1906.

N. VENKATESAIENGAR, for *Director of Meteorology.*

Abstract Statement of Plague Cases and Deaths in the Mysore Province for the week ending Friday the 27th April 1906.

Place	During the week ending 27th April 1906		During the week ending 20th April 1906		Figures for the corresponding week of last year		Number of infected villages
	Attack	Deaths	Attacks	Deaths	Attacks	Deaths	
Bangalore City	3	2	5	5	8	6	...
Mysore City	...	...	...	...	1	...	...
Bangalore District	1	1	...	...	5	4	1
Mysore District	...	...	3	2	5	3	1
Kolar District (excluding Gold Fields)	...	1	1	2	3	3	...
Kolar Gold Fields	1	2	4	1	7	7	3
Tumkur District	...	...	...	...	5	3	...
Hassan District	...	...	...	...	...	...	...
Chitaldrug District ...	...	...	...	...	...	...	...
Kadur District ...	...	...	...	...	12	8	...
Shimoga District	...	...	...	...	3	4	...
Total ..	5	5	13	10	49	38	5

P. PALPU, L.M.S., D.P.H.,
for *Offg. Sr. Surgn. & Sany. Comr., M. G.*

412

The Mysore Gazette.

VOL. 41.] PUBLISHED BY AUTHORITY. [No. 18.

BANGALORE, THURSDAY, MAY 3, 1906.

PART IV.

OFFICIAL PAPERS.

Season Report for the Week ending with the 17th Saturday in 1906 (28*th April* 1906).

District and Station.	Rainfall up to 8 A.M. on Saturday. This week.		Last ten years' average for the corresponding week.		Up to the end of the week from 1st January 1906. This year.		Average of past ten years.		Excess (+) or defect (—) of column 4 compared with column 5.		Price of food grains in seers per rupee and market fluctuations in prices of food grains.			
1	2		3		4		5		6		7			
	I.	c	I.	c.	I.	c.	I.	c.	I.	c.		This week.	Past week.	Past ten years' fortnightly average.
												Seers	Seers.	Seers.
BANGALORE. Bangalore C. & M. Station ...	...	...	...	...	...	..	...	...	..	...				
" City & Taluk...	...	..	...	45	1	89	2	11	— 0	22	Rice, 2nd sort.	7·00	7·25	9·36
Hoskote ...	...	...	...	66	..	57	2	19	— 1	62				
Dodballapur ...	...	...	...	77	...	43	2	64	— 2	21	Ragi	17·50	17·50	23·10
Nelamangala ...	...	...	...	28	..	73	1	79	— 1	6	Kulthi	12·25	12·25	...
Kankanhalli ...	..	.	...	97	...	90	2	14	— 1	24	Kadale	8·00	8·00	10·20
Magadi ...	..	..	..	39	..	...	1	65	— 1	65				
Channapatna ...	...	..	...	78	..	37	2	77	— 2	40				
Anekal ...	...	..	...	84	2	24	2	50	— 0	26				
Devanhalli ...	...	...	...	72	...	52	2	59	— 2	7				
Closepet ...	..	...	...	73	...	82	1	96	— 1	14				
District average...	...	...	...	66	.	84	2	23	— 1	39				
KOLAR. Kolar ...	...	...	...	72	...	55	2	5	— 1	50				
Bowringpet ...	...	...	...	44	...	45	1	78	— 1	33	Rice, 2nd sort.	7·25	7·25	9·25
Chintamani ...	...	...	...	41	1	...	1	13	— 0	13				
Mulbagal ...	...	...	...	36	1	99	1	96	+ 0	3	Ragi	18·00	15·00	23·90
Sidlaghatta ...	...	...	...	20	...	36	1	12	— 0	76	Kulthi	14·00	15·00	...
Chikballapur ...	...	..	...	54	2	44	2	88	— 0	44	Kadale	9·00	9·00	9·10
Bagepalli ...	...	...	...	15	1	20	...	82	+ 0	38				
Goribidnur ...	...	...	...	38	...	60	1	12	— 0	52				
Malur ...	..	...	..	51	1	34	1	72	— 0	38				
Srinivaspur ...	...	...	...	37	1	88	1	95	— 0	7				
Gudibanda ...	...	...	...	26	...	73	...	99	— 0	26				
District average...	...	...	..	39	1	14	1	59	— 0	45				
TUMKUR. Tumkur ...	..	...	...	26	1	20	1	59	— 0	39				
Maddagiri ...	...	...	..	29	...	28	1	12	— 0	84				
Chiknayakanhalli ...	...	...	...	52	1	40	1	71	— 0	31	Rice, 2nd sort.	7·50	7·50	9·20
Sira ...	...	...	...	53	1	37	1	33	+ 0	4				
Gubbi ...	.	...	...	7	..	36	1	..	— 0	64	Ragi	16·00	16·00	26·10
Tiptur ...	...	...	...	20	...	20	1	25	— 1	5	Kulthi	12·00	12·00	...
Pavagada ...	...	...	..	37	...	..	1	6	— 1	6	Kadale	8·00	8·00	9·35
Kunigal ...	...	...	..	30	...	44	...	89	— 0	45				
Koratagere ...	...	...	...	19	1	10	1	1	+ 0	9				
Turuvekere ...	...	...	...	29	...	57	1	19	— 0	62				
District average...	...	...	...	30	...	69	1	21	— 0	52				

District and Station.	Rainfall up to 8 A. M. on Saturday.						Price of food grains in seers per rupee and market fluctuations in prices of food grains.			
	This week.		Last ten years' average for the corresponding week.		Up to the end of the week from 1st January 1906.					
					This year.		Average of past ten years.		Excess (+) or defect (−) of column 4 compared with column 5.	
1	2		3		4		5		6	7
	I.	c.	I.	c.	I.	c.	I.	c.	I.	c.
MYSORE.										
Mysore ...	...	...	...	55	2	41	1	74	+0	67
Chamrajnagar ...	...	...	1	37	...	5	3	18	−3	13
Seringapatam ...	...	...	...	72	...	71	2	9	−1	38
Hunsur ...	...	...	...	62	...	12	2	33	−2	21
Yedatore ...	...	78	...	58	1	43	2	7	−0	64
Heggaddevankote ...	...	...	1	27	..	...	6	69	−6	69
Gundlupet ...	..	...	1	2	1	63	3	14	−1	51
Nanjangud ...	...	16	1	10	1	5	2	52	−1	47
T.-Narsipur ...	...	...	...	75	...	98	2	48	−1	50
Malvalli ...	...	..	...	69	...	67	1	87	−1	20
Mandya ...	...	..	...	40	2	9	1	35	+0	74
Krishnarajpete ...	1	5	..	59	1	85	2	..	−0	15
Nagamangala ...	...	..	...	66	1	38	1	52	−0	14
District average...	...	15	...	79	1	11	2	54	−1	43
HASSAN.										
Hassan ...	...	...	...	42	...	9	2	10	−1	1
Manjarabad (Saklespur)	..	3	...	88	..	87	2	69	−1	82
Arkalgud ..	...	...	...	45	2	60	2	15	+1	45
Belur ...	...	23	...	78	1	49	2	85	−1	36
Channarayapatna ...	...	...	...	69	1	10	1	81	−0	71
Arsikere ...	...	...	...	55	...	...	1	80	−1	80
Hole-Narsipur ...	..	...	...	45	1	19	2	8	−0	89
Alur ...	...	...	...	83	..	5	2	30	−2	25
District average...	...	3	...	63	...	92	2	22	−1	30
SHIMOGA.										
Shimoga ...	...	..	...	49	...	94	2	9	−1	15
Channagiri ...	...	...	...	23	...	20	1	5	−0	85
Honnali ...	...	..	...	52	1	20	2	14	−0	94
Shikarpur ...	...	..	...	37	...	...	1	79	−1	79
Sorab ...	...	...	..	43	..	43	1	56	−1	13
Sagar ...	...	...	...	16	1	89	1	59	+0	30
Nagar (Kallurkatte) ..	...	..	...	46	...	56	1	34	−0	78
Tirthahalli ...	...	...	...	43	1	15	1	87	−0	72
Kumsi ...	..	...	..	37	...	16	1	88	−1	72
District average...	...	..	..	38	...	73	1	70	−0	97
KADUR.										
Chikmagalur ..	..	...	.	54	1	62	2	56	−0	94
Kadur .	...	...	...	38	...	...	1	77	−1	77
Tarikere ...	...	...	...	72	...	76	2	39	−1	63
Koppa .	...	...	..	60	2	69	2	44	+0	25
Mudgere ...	...	...	..	82	...	65	3	40	−2	75
Yedahalli ...	...	...	.	29	...	40	2	49	−2	9
Sringeri ..	..	...	...	55	1	3	2	64	−1	61
District average ..	...	...	...	56	1	2	2	53	−1	51
CHITALDRUG.										
Chitaldrug ..	...	...	...	38	1	22	1	9	+0	13
Challakere ...	..	..	.	40	...	8	1	39	−1	31
Hiriyur ..	...	8	...	34	...	19	1	7	−1	88
Holalkere ...	..	..	.	25	...	20	2	..	−1	80
Davangere ...	...	...	...	30	...	41	1	25	−0	84
Molakalmuru ...	...	20	...	30	...	44	..	62	−0	18
Jagalur ...	..	25	...	13	...	52	1	34	−0	82
Hosdurga ..	...	21	..	27	...	31	...	84	−0	53
Harihar ..	...	...	..	40	2	94	1	4	+1	99
District average...	..	8	...	31	...	70	1	18	−0	48
Provincial average...	...	3	...	50	...	89	1	90	−1	1

	This week Seers.	Past week. Seers.	Past ten years' fortnightly average. Seers.
Rice, 2nd sort.	8·00	8·25	10·36
Ragi	14·00	14·00	21·48
Kulthi	12·50	13·00	...
Kadale	9·50	9·00	10·24
Rice, 2nd sort.	8·00	8·50	10·4
Ragi	16·00	18·00	24·86
Kulthi	11·50	12·00	...
Kadale	9·00	9·00	10·15
Rice, 2nd sort	8·50	8·50	12·24
Ragi	14·75	14·75	30·37
Kulthi	11·50	11·50	...
Rice, 2nd sort	7·50	7·50	10·60
Ragi	15·00	15·00	23·60
Kulthi	11·00	11·00	...
Kadale	8·00	8·00	9·90
Rice, 2nd sort	7·50	7·50	10·60
Ragi	14·00	14·00	27·60
Kulthi	11·00	11·00	...
Cholum	12·00	12·00	24·30
Kadale	8·00	8·00	10·60

Note—Rice (husked)—Oryza Sativa.
Ragi—Eleusine Corocana.
Kulthi—(Horse gram) Dolichos Biflorus.
Cholum—Sorghum Vulgare.
Kadale—(Bengal gram) Ciser Arietinum.

DISTRICT REPORTS.

8. Markets how supplied.
9. Progress of agricultural operations, state of standing crops, prospects and probable outturn of harvests, serious damage done to crops by insects or other natural calamities.
10. Prospects of season, tracts in which the rainfall has been insufficient, areas affected by scarcity, number of people under relief, and state of food stocks.
11. Public health.
12. Remarks as to the condition of agricultural stock, failure of pasturage, of fodder, etc.

BANGALORE CIVIL AND MILITARY STATION.

		Normal.	*Current.*	
Prices of food grains—	Rice	... 10 to 11	6½ to 7	seers per rupee.
	Ragi	... 25 to 30	16 to 17	

Manure is being collected.
Cattle are in good condition.
Water and fodder sufficient.
Much anxiety is felt among the raiyats for want of rain.

BANGALORE CITY AND TALUKS.

8. Market well supplied.
9. Standing crops are in good condition. Sugar-cane is being harvested in Bangalore and Channapatna, and resown in Bangalore. Otherwise agricultural operations are at a stand-still.
10. Prospects of the season depend on mungar rains. Rain is badly wanted throughout.
11. Public health generally good.
12. Cattle healthy. Water and fodder available. Temporary wells have been sunk in twenty-one villages of Nelamangala and in two tanks of Kankanhalli to meet the difficulty of water.

KOLAR.

8. Market well supplied.
9. Sugar-cane is being planted in Bowringpet, Chintamani, Sidlaghatta, Chikballapur and Goribidnur. Sugar-cane is also being milled in Kolar and Mulbagal. Vaisakhi paddy is being harvested in Sadali Hobli of Sidlaghatta and in Bagepalli; Kadale in Chikballapur and cholum in Bagepalli.
10. Prospects of the season depend upon early rains. Food stocks are available.
11. Public health generally good.
12. Fodder generally available, but the supply of water is running short, and wells in beds of tanks are sunk to meet the demand. Pasture in fields and grazing lands is almost exhausted.

TUMKUR.

8. Market well supplied.
9. Paddy in Maddagiri, Sira, Pavagada and Koratagere, sugar-cane in Gubbi and Tumkur, cholum in Sira, kadale in Gubbi and cotton in Pavagada are being harvested. Sugar-cane in Maddagiri and Koratagere and nat-ragi in Pavagada are sown. Standing crops in Maddagiri, Sira, Pavagada and Kunigal are in pretty fair condition. Elsewhere they are reported to be withering for want of water. The following is the estimated outturn of crops :—

Maddagiri—Paddy 8 to 12 annas.
Sira—Paddy 4 to 8 annas, cholum 2 to 4 annas.
Gubbi—Sugar-cane and kadale 4 annas.
Pavagada—Paddy 8 annas, cotton 4 annas.
Koratagere—Paddy 8 annas.

10. Prospects of the season not very encouraging. Food stocks are available for the present. Supply of water in wells is diminishing in several parts of the district. Mungar rains are anxiously awaited.
11. Public health generally good, except that small-pox prevails in parts of Tiptur, Kunigal and Turuvekere. It is reported that it is subsiding in Gubbi.
12. Cattle healthy, except that foot and mouth disease prevails in parts of Tiptur, Kunigal and Turuvekere. In parts of Sira, Tiptur and Turuvekere date leaves are used as fodder for cattle. Water is drawn from wells in most parts of the district for cattle to drink. Water and fodder are both getting scarce.

MYSORE.

8. Market well supplied. Prices are rising.
9. The standing mulberry, sugar-cane and cotton crops are reported to be fair in Chamrajnagar, Seringapatam, Malvalli and Krishnarajpete, and good in T.-Narsipur and Nagamangala. Lands in most parts of the district have been made ready for sowing, but no rain has fallen. Cholum has not been sown till now. The probable outturn of crops is as follows :—

T.-Narsipur—Sugar-cane and mulberry 12 annas.
Krishnarajpete—Sugar-cane 12 annas, black and green grams 8 annas.

10. Prospects of the season not encouraging. The rainfall of the week has been very scanty and confined only to three taluks. Rain is anxiously awaited. Food stocks sufficient for the present.

11. Public health generally good, but small-pox still prevails in Heggaddevankote.

12. Cattle in parts of Chamrajnagar, Heggaddevankote and Malvalli are reported to be suffering from foot and mouth disease. In other parts they are reported to be healthy. Fodder and water are getting scarce in many parts of the district.

HASSAN.

8. Market fairly well supplied, but prices are high.

9. Standing crops, *viz.*, paddy in Hassan, Arsikere and Manjarabad, sugar-cane in Hassan, Arsikere, Channarayapatna, Belur, Arkalgud and Alur, and black and green grams and tadagani in Hole-Narsipur are reported to be withering for want of rain. The probable outturn of standing crops in Hole-Narsipur is estimated at 8 annas. Agricultural operations are retarded owing to want of rain.

10. Prospects of the season not promising, but depend upon early fall of rain. Food stocks are reported to be sufficient for the present. Rain is very badly needed in all parts.

11. Public health generally good. Small-pox is reported to be subsiding in several parts of the district.

12. Cattle generally healthy, but foot and mouth disease is reported to be still prevailing in parts of Hole-Narsipur, Belur, Manjarabad, Arsikere and Channarayapatna, as also the disease known as "*Metrigattu*" in parts of Arkalgud. Fodder and water generally available, except in parts of Channarayapatna and Arsikere, where difficulty is felt for both.

SHIMOGA.

8. Market well supplied. Prices high.

9. Kar paddy under Sulekere in Channagiri, Nagar and Sagar and sugar-cane in Sagar and Nagar are in a fair condition in areas where water is available. Sugar-cane plants are reported to be withering in the Sorab Taluk. In parts of Nagar and Sorab the ground is being ploughed and manure collected in expectation of rains.

10. A very slight shower of rain fell in Shimoga and Sagar. The heat is intense and rain is anxiously awaited everywhere. Food stocks are procurable for the present.

11. Public health generally good. Small-pox prevails in some localities of the Shimoga, Channagiri and Sagar Taluks and fever exists in the Kumsi Sub-Taluk.

12. Except in Sagar, Nagar and Tirthahalli, fodder supply is limited, and the fodder that is available is highly priced. Scarcity of water is on the increase in all taluks.

KADUR.

8. Market fairly well supplied.

9. Sugar-cane is being planted in parts of Tarikere and Koppa. The standing crops, *viz.*, kar paddy and sugar-cane in parts of Kadur and Chikmagalur are in fairly good condition; and sugar-cane in parts of Lakkavalli Hobli of the Tarikere Taluk are not flourishing for want of water. Cotton in parts of Tarikere and sugar-cane in parts of Kadur are being harvested. Ploughing and other agricultural operations are delayed for want of rain.

10. Prospects of the season fair, but rain is badly needed throughout. Food stocks available and sufficient for the present.

11. Public health generally good, except that small-pox prevails in parts of Chikmagalur, Mudgere, Koppa and Kadur.

12. Foot and mouth disease to cattle is reported to be subsiding, except in parts of Kadur and Koppa, but no mortality is reported. Water and fodder are generally available. Water-supply is scanty in parts of Chikmagalur, Tarikere, Kadur, Koppa and Yedahalli.

CHITALDRUG.

8. Market well supplied.

9. The outturn of crops harvested during the week is as follows:—

Chitaldrug—Sugar-cane 10 annas.
Hiriyur—Ragi, wheat and kadale 2 annas; ballar, togari and cotton 4 annas; paddy under kapile wells 8 to 10 annas.
Holalkere—Paddy 8 annas.
Davangere—Sugar-cane 4 to 8 annas.
Molakalmuru—Paddy 8 annas and onions 6 annas.

10. Prospects of the season fair. Food stocks available.

11. Public health good.

12. Cattle healthy. Water and fodder procurable in limited quantities.

BANGALORE,
2nd May 1906.

B. K. VENKATA VARADA IYENGAR,
Secy. to the Govt. of H. H. the Maharaja of Mysore,
Gen. & Rev. Dept.

Prices Current [Wholesale] of Food Grains, &c., at the Head-Quarters of the several Districts of the Mysore State during the fortnight ending 15th Apl. 1906.

ಸನ್ 1906ನೆ ಇಸವಿ ಏಪ್ರಿಲ್ ಮಾಹೆ 15ನೆ ತಾರೀಖಿಗೆ ಆಖೈರಾದ ಪಂಧ್ರಾವಾಡಾ ಬಾಬತು ಒಟ್ಟು ವ್ಯಾಪಾರದ ದುಕಾನ್‌ಗಳಲ್ಲಿ ಪುರೋಖ್ತ್ ಆದ ಆಹಾರ ಜಿನಸೀ ವಗೈರೆ ನಿರಖುನಾಮಾ ಡಿಸ್ಟ್ರಿಕ್ಟ್ ಹೆಡ್ ಕ್ವಾರ್ಟರ್‌ಗಳ ಬಾಬತು.

Prices per 10 maunds of 82 2/7 lbs. each ಮಣ 1ಕ್ಕೆ 82 2/7 ಪೌನುಗಳ ಮೇರಿಗೆ 10 ಮಣಕ್ಕೆ ಖರೀದಿ

Grains and Pulses ಧಾನ್ಯ ಮತ್ತು ಕಾಳುಗಳು

District ಡಿಸ್ಟ್ರಿಕ್ಟ	Rice unhusked (paddy) Oryza sativa ಭತ್ತ 2									Rice, best sort ಅವಲ್ ತರಹೆ ಅಕ್ಕಿ 3								
	Present fortnight ಪುಜಕ್ಕೂರ್ ಪಂಧ್ರಾವಾಡಾ			Past fortnight ಗುಜಷ್ಟಾ ಪಂಧ್ರಾವಾಡಾ			Corresponding fortnight of last year ಗುಜಷ್ಟಾ ಸಾಲ್ ಸೊಕಾಬಿಲಾ ಪಂಧ್ರಾವಾಡಾ			Present fortnight ಪುಜಕ್ಕೂರ್ ಪಂಧ್ರಾವಾಡಾ			Past fortnight ಗುಜಷ್ಟಾ ಪಂಧ್ರಾವಾಡಾ			Corresponding fortnight of last year ಗುಜಷ್ಟಾ ಸಾಲ್ ಸೊಕಾಬಿಲಾ ಪಂಧ್ರಾವಾಡಾ		
	Rs	a	p	Rs	a	p	Rs	a	p	Rs	a	p	Rs	a	p	Rs	a	p
Bangalore	23	8	2	23	8	2	15	10	9	51	1	9	53	0	0	44	11	2
Kolar ...	22	0	0	22	0	0	20	0	0	57	0	0	57	0	0	50	0	0
Tumkur ...	22	0	0	22	0	0	18	0	0	63	0	0	63	0	0	45	0	0
Mysore ..	27	3	2	27	3	2	24	3	3	51	3	2	51	3	2	45	11	4
Hassan ...	20	9	2	20	9	2	15	6	10	53	7	9	53	7	9	45	11	5
Shimoga ...	19	9	4	17	12	2	16	14	0	55	15	5	55	15	5	49	1	0
Kadur ...	15	0	0	15	0	0	14	0	0	52	0	0	52	0	0	50	0	0
Chitaldrug	25	11	5	25	11	5	17	2	4	58	12	5	58	12	5	45	11	5

District ಡಿಸ್ಟ್ರಿಕ್ಟ	Rice, common ಸಾಧಾರಣ ಅಕ್ಕಿ 4									Wheat Triticum sativum ಹೊಟ್ಟೆ ಗೋಧಿ 5								
	Present fortnight ಪುಜಕ್ಕೂರ್ ಪಂಧ್ರಾವಾಡಾ			Past fortnight ಗುಜಷ್ಟಾ ಪಂಧ್ರಾವಾಡಾ			Corresponding fortnight of last year ಗುಜಷ್ಟಾ ಸಾಲ್ ಸೊಕಾಬಿಲಾ ಪಂಧ್ರಾವಾಡಾ			Present fortnight ಪುಜಕ್ಕೂರ್ ಪಂಧ್ರಾವಾಡಾ			Past fortnight ಗುಜಷ್ಟಾ ಪಂಧ್ರಾವಾಡಾ			Corresponding fortnight of last year ಗುಜಷ್ಟಾ ಸಾಲ್ ಸೊಕಾಬಿಲಾ ಪಂಧ್ರಾವಾಡಾ		
	Rs	a	p	Rs	a	p	Rs	a	p	Rs	a	p	Rs	a	p	Rs	a	p
Bangalore	44	11	6	46	2	7	37	10	7	36	13	9	38	14	5	31	13	4
Kolar ...	53	0	0	53	0	0	44	0	0	50	0	0	50	0	0	40	0	0
Tumkur ...	48	0	0	48	0	0	44	0	0	58	0	0	58	0	0	39	0	0
Mysore ..	43	14	2	43	14	2	38	9	7	58	12	4	58	12	4	36	3	11
Hassan ...	51	6	10	51	6	10	41	2	3	51	6	10	41	2	3	41	2	3
Shimoga ...	49	1	0	49	1	0	35	8	4	55	15	5	55	15	5	35	8	4
Kadur ...	50	0	0	50	0	0	36	0	0	50	0	0	50	0	0	36	0	0
Chitaldrug	51	6	10	51	6	10	41	2	3	51	6	10	51	6	10	34	4	7

District ಡಿಸ್ಟ್ರಿಕ್ಟ	Barley Hordeum vulgare ಜವೆ ಗೋಧಿ 6								
	Present fortnight ಪುಜಕ್ಕೂರ್ ಪಂಧ್ರಾವಾಡಾ			Past fortnight ಗುಜಷ್ಟಾ ಪಂಧ್ರಾವಾಡಾ			Corresponding fortnight of last year ಗುಜಷ್ಟಾ ಸಾಲ್ ಸೊಕಾಬಿಲಾ ಪಂಧ್ರಾವಾಡಾ		
	Rs	a	p	Rs	a	p	Rs	a	p
Bangalore		*			*			*	
Kolar ...	50	0	0	50	0	0		40	0	0
Tumkur ...	58	0	0	58	0	0		39	0	0
Mysore ..		*			*			*	
Hassan ...	51	6	10	41	2	3		41	2	3
Shimoga ...		*			*			*	
Kadur ...	32	0	0	32	0	0		32	0	0
Chitaldrug	51	6	10	51	6	10		34	4	7

* Article not available.

Prices Current [Wholesale] of Food Grains, &c., at the Head-Quarters of the several Districts of the Mysore State during the fortnight ending 15th Apl. 1906—*contd.*

ಸನ 1906 ನೆ ಇಸವಿ ಏಪ್ರಿಲ್ ಮಾಹೇ 15ನೆ ತಾರೀಖಿಗೆ ಆಖೈರಾದ ಪಂಧ್ರವಾಡಾ ಬಾಬತು ಒಟ್ಟುವ್ಯಾಪಾರದ ದುಕಾನಗಳಲ್ಲಿ ಪುರೋಖ್ತ್ ಆದ ಆಹಾರಜಿನಸು ವಗೈರೆ ನಿರಖುನಾಮಾ-ಡಿಸ್ಟ್ರಿಕ್ಟ್ ಹೆಡ್ ಕ್ವಾರ್ಟರ್‌ಗಳ ಬಾಬತು-ಸಂಕ್ಷೇಪ.

Prices per 10 maunds of $82\frac{2}{7}$ lbs. each ಮಣ 1ಕ್ಕೆ $82\frac{2}{7}$ ಪೌನುಗಳ ಮೇರಿಗೆ 10 ಮಣಕ್ಕೆ ಖರೀದಿ

Grains and Pulses ಧಾನ್ಯ ಮತ್ತು ಕಾಳುಗಳು

District ಡಿಸ್ಟ್ರಿಕ್ಟ	Cholam or javar Sorghum vulgare ಜೋಳ 7			Kambu or Bajara Pennisetum typhoideum ಸಜ್ಜೆ 8			Ragi Eleusine coracana ರಾಗಿ 9			Maize Zeamays ಮುಸುಕಿನ ಜೋಳ 10			Bengal gram Cicer arietinum ಕಡಲೆ 11		
	Present fortnight ಸಂಪ್ರತಿಯ ಪಂಧ್ರವಾಡಾ	Past fortnight ಗುಜಷ್ತಾ ಪಂಧ್ರವಾಡಾ	Corresponding fortnight of last year ಗುಜಷ್ತಾ ಸಾಲ ಸೊಕಾಬಿನ ಪಂಧ್ರವಾಡಾ	Present fortnight ಸಂಪ್ರತಿಯ ಪಂಧ್ರವಾಡಾ	Past fortnight ಗುಜಷ್ತಾ ಪಂಧ್ರವಾಡಾ	Corresponding fortnight of last year ಗುಜಷ್ತಾ ಸಾಲ ಸೊಕಾಬಿನ ಪಂಧ್ರವಾಡಾ	Present fortnight ಸಂಪ್ರತಿಯ ಪಂಧ್ರವಾಡಾ	Past fortnight ಗುಜಷ್ತಾ ಪಂಧ್ರವಾಡಾ	Corresponding fortnight of last year ಗುಜಷ್ತಾ ಸಾಲ ಸೊಕಾಬಿನ ಪಂಧ್ರವಾಡಾ	Present fortnight ಸಂಪ್ರತಿಯ ಪಂಧ್ರವಾಡಾ	Past fortnight ಗುಜಷ್ತಾ ಪಂಧ್ರವಾಡಾ	Corresponding fortnight of last year ಗುಜಷ್ತಾ ಸಾಲ ಸೊಕಾಬಿನ ಪಂಧ್ರವಾಡಾ	Present fortnight ಸಂಪ್ರತಿಯ ಪಂಧ್ರವಾಡಾ	Past fortnight ಗುಜಷ್ತಾ ಪಂಧ್ರವಾಡಾ	Corresponding fortnight of last year ಗುಜಷ್ತಾ ಸಾಲ ಸೊಕಾಬಿನ ಪಂಧ್ರವಾಡಾ
	Rs a p	Rs a p	Rs a p	Rs a p	Rs a p	Rs a p	Rs a p	Rs a p	Rs a p	Rs a p	Rs a p	Rs a p	Rs a p	Rs a p	Rs a p
Bangalore	*	*	*	*	*	*	21 10 6	22 13 9	21 10 5	3 maizes for 4 pies.	3 maizes for 4 pies.	3 maizes for 4 pies.	46 7	41 3 11	32 10 5
Kolar ...	*	*	*	*	*	*	26 0 0	26 0 0	20 0 0	*	*	*	44 0 0	44 0 0	40 0 0
Tumkur ...	29 0 0	29 0 0	18 0 0	*	*	*	22 0 0	22 0 0	18 0 0	*		*	48 0 0	48 0 0	39 0 0
Mysore ...	27 14 2	27 14 2	18 4 6	*	*	*	25 15 4	25 15 4	22 10 1	*	*	*	43 4 10	43 4 10	35 4 3
Hassan ...	*	*	*	*	*	*	25 11 5	25 11 5	22 4 7	*	*	*	51 6 10	51 6 10	41 2 3
Shimoga ...	28 0 3	28 0 3	16 14 0	*	*	*	24 6 10	24 6 10	16 14 0	*	*	*	55 15 5	49 1 0	34 1 0
Kadur ...	22 0 0	22 0 0	19 0 0	*	*	*	25 0 0	25 0 0	16 0 0	*	*	*	50 0 0	50 0 0	30 0 0
Chitaldrug	31 10 4	25 11 5	17 2 4	25 11 5	25 11 5	17 2 4	27 6 10	25 11 5	17 2 4	*	*	*	51 6 10	51 6 10	34 4 7

* Article not available.

Prices Current [Wholesale] of Food Grains, &c., at the Head-Quarters of the several Districts of the Mysore State during the fortnight ending 15th Apl. 1906—*contd.*

ಸನ್ 1906ನೆ ಇಸವಿ ಏಪ್ರೆಲ್ ಮಾಹೇ 15ನೆ ತಾರೀಖಿಗೆ ಆಬೈರಾದ ಪಂಧ್ರಾವಾಡಾ ಬಾಬತು ಒಟ್ಟು ವ್ಯಾಪಾರದ ದುಕಾನಗಳಲ್ಲಿ ಪುರೋಖ್ತ ಆದ ಆಹಾರಜಿನಸಿ ವಗೈರೆ ನಿರಖುನಾಮಾ-ಡಿಸ್ಟ್ರಿಕ್ಟ್ ಹೆಡ್ ಕ್ವಾರ್ಟರಗಳ ಬಾಬತು-ಸಕೀಪ.

District ಡಿಸ್ಟ್ರಿಕ್ಟ	Prices per 10 maunds of $82\frac{2}{7}$ lbs. each ಮಣ 1ಕ್ಕೆ $28\frac{2}{7}$ ಪೌನುಗಳ ಮೇರಿಗೆ 10 ಮಣಕ್ಕೆ ಖರೀದಿ																													
	Grains and Pulses ಧಾನ್ಯ ಮತ್ತು ಕಾಳುಗಳು																											Ghee (Clarified butter) ತುಪ್ಪ		
	Horse gram Dolichos biflorus ಹುರಳಿ						Arhar Cajanus indicus ತೊಗರಿ						Arhar Dal ತೊಗರಿ ಬ್ಯಾಳೆ						Kangani Setaria italica ನವಣೆ											
	12						13						14						15						16					
	Present fortnight ಸುಜಕ್ಕೂರಿ ಪಂಧ್ರಾವಾಡಾ			Past fortnight ಗುಜಷ್ಟಾ ಪಂಧ್ರಾವಾಡಾ			Corresponding fortnight of last year ಗುಜಷ್ಟಾ ಸಾಲ್ ಪೊಕಾಬಿಲಾ ಪಂಧ್ರಾವಾಡಾ			Present fortnight ಸುಜಕ್ಕೂರಿ ಪಂಧ್ರಾವಾಡಾ			Past fortnight ಗುಜಷ್ಟಾ ಪಂಧ್ರಾವಾಡಾ			Corresponding fortnight of last year ಗುಜಷ್ಟಾ ಸಾಲ್ ಪೊಕಾಬಿಲಾ ಪಂಧ್ರಾವಾಡಾ			Present fortnight ಸುಜಕ್ಕೂರಿ ಪಂಧ್ರಾವಾಡಾ			Past fortnight ಗುಜಷ್ಟಾ ಪಂಧ್ರಾವಾಡಾ			Corresponding fortnight of last year ಗುಜಷ್ಟಾ ಸಾಲ್ ಪೊಕಾಬಿಲಾ ಪಂಧ್ರಾವಾಡಾ			Present fortnight ಸುಜಕ್ಕೂರಿ ಪಂಧ್ರಾವಾಡಾ			Past fortnight ಗುಜಷ್ಟಾ ಪಂಧ್ರಾವಾಡಾ			Corresponding fortnight of last year ಗುಜಷ್ಟಾ ಸಾಲ್ ಪೊಕಾಬಿಲಾ ಪಂಧ್ರಾವಾಡಾ		
	Rs	a	p	Rs	a	p	Rs	a	p	Rs	a	p	Rs	a	p	Rs	a	p	Rs	a	p	Rs	a	p	Rs	a	p	Rs	a	p
Bangalore	25	13	0	26	5	4	25	5	1	24	6	1	24	6	1	30	7	7	45	11	5	45	11	5	45	11	5	*			*			*			420	0	0	411	6	10	342	13	8
Kolar ..	29	0	0	29	0	0	26	0	0	*			*			*			44	0	0	44	0	0	50	0	0	*			*			*			400	0	0	400	0	0	400	0	0
Tumkur ...	28	0	0	28	0	0	29	0	0	30	0	0	30	0	0	29	0	0	48	0	0	48	0	0	48	0	0	*			*			*			291	0	0	291	0	0	289	0	0
Mysore ...	25	9	9	25	9	9	25	3	1	41	2	3	41	2	3	31	5	6	52	1	9	52	1	9	56	3	8	*			*			*			390	12	6	390	12	6	356	0	0
Hassan ...	37	6	5	34	4	7	34	4	7	37	6	5	34	4	7	34	4	7	51	6	10	54	6	10	45	11	5	*			*			*			411	6	10	411	6	10	411	6	10
Shimoga ..	35	8	4	35	8	4	30	2	6	32	8	0	35	8	4	28	0	3	49	1	0	49	1	0	49	1	0	*			*			*			415	1	8	342	14	8	387	7	2
Kadur ...	32	0	0	32	0	0	30	0	0	30	0	0	30	0	0	30	0	0	42	0	0	42	0	0	42	0	0	*			*			*			363	0	0	363	0	0	363	0	0
Chitaldrug	34	4	7	29	6	2	25	11	5	29	6	2	29	6	2	29	6	2	51	6	10	51	6	10	45	11	5	20	9	2	20	9	2	13	11	5	411	6	10	411	6	10	411	6	10

* Article not available.

418

Prices Current [Wholesale] of Food Grains, &c., at the Head-Quarters of the several Districts of the Mysore State during the fortnight ending 15th Apl. 1906—*contd.*

ಸನ್1906ನೆ ಇಸವಿ ಏಪ್ರಿಲ್ ಮಾಹೇ 15ನೆ ತಾರೀಖಿಗೆ ಆಖೈರಾದ ಪಂಧ್ರಾವಾಡಾ ಬಾಬತು ಒಟ್ಟುವ್ಯಾಪಾರದ ದುಕಾನಗಳಲ್ಲಿ ಪುರೋಖ್ತಾದ ಆಹಾರ ಜಿನಸಿ ವಗೈರೆ ನಿರಖುನಾಮಾ-ಡಿಸ್ಟ್ರಿಕ್ಟ್ ಹೆಡ್‌ಕ್ವಾರ್ಟರ್‌ಗಳ ಬಾಬತು-ಸಶೇಷ.

Prices per 10 maunds of 82 2/7 lbs. each ಮಣ 1ಕ್ಕೆ 82 2/7 ಪೌನುಗಳ ಮೇರಿಗೆ 10 ಮಣಕ್ಕೆ ಖರೀದಿ

District ಡಿಸ್ಟ್ರಿಕ್ಟ್	Wheat Flour ಗೋಧಿ ಹಿಟ್ಟು 17									Sea Salt ಕಲ್ಲುಪ್ಪು 18									Oil Seeds: Gingelly Sesamum indicum ಎಳ್ಳು 19									Sugar: Goor or jaggory ಬೆಲ್ಲ 20									Fibres: Cotton cleaned Gossypium ಅರಳೆ 21								
	Present fortnight ಪ್ರಸ್ತುತ ಪಂಧ್ರಾವಾಡಾ			Past fortnight ಗುಜಷ್ತಾ ಪಂಧ್ರಾವಾಡಾ			Corresponding fortnight of last year ಗುಜಷ್ತಾ ಸಾಲ್ ಸೈಕಾಬಿಲಾ ಪಂಧ್ರಾವಾಡಾ			Present fortnight ಪ್ರಸ್ತುತ ಪಂಧ್ರಾವಾಡಾ			Past fortnight ಗುಜಷ್ತಾ ಪಂಧ್ರಾವಾಡಾ			Corresponding fortnight of last year ಗುಜಷ್ತಾ ಸಾಲ್ ಸೈಕಾಬಿಲಾ ಪಂಧ್ರಾವಾಡಾ			Present fortnight ಪ್ರಸ್ತುತ ಪಂಧ್ರಾವಾಡಾ			Past fortnight ಗುಜಷ್ತಾ ಪಂಧ್ರಾವಾಡಾ			Corresponding fortnight of last year ಗುಜಷ್ತಾ ಸಾಲ್ ಸೈಕಾಬಿಲಾ ಪಂಧ್ರಾವಾಡಾ			Present fortnight ಪ್ರಸ್ತುತ ಪಂಧ್ರಾವಾಡಾ			Past fortnight ಗುಜಷ್ತಾ ಪಂಧ್ರಾವಾಡಾ			Corresponding fortnight of last year ಗುಜಷ್ತಾ ಸಾಲ್ ಸೈಕಾಬಿಲಾ ಪಂಧ್ರಾವಾಡಾ			Present fortnight ಪ್ರಸ್ತುತ ಪಂಧ್ರಾವಾಡಾ			Past fortnight ಗುಜಷ್ತಾ ಪಂಧ್ರಾವಾಡಾ			Corresponding fortnight of last year ಗುಜಷ್ತಾ ಸಾಲ್ ಸೈಕಾಬಿಲಾ ಪಂಧ್ರಾವಾಡಾ		
	Rs	a	p	Rs	a	p	Rs	a	p	Rs	a	p	Rs	a	p	Rs	a	p	Rs	a	p	Rs	a	p	Rs	a	p	Rs	a	p	Rs	a	p	Rs	a	p	Rs	a	p	Rs	a	p
Bangalore	56	15	1	56	15	1	56	15	2	26	8	0	26	8	0	32	8	5	72	5	5	72	5	5	58	12	5	49	4	7	49	4	7	64	4	7	205	11	5	205	11	5	205	11	5
Kolar ..	50	0	0	50	0	0	50	0	0	26	0	0	26	0	0	33	0	0	50	0	0	50	0	0	50	0	0	44	0	0	44	0	0	44	0	0	*			*			*		
Tumkur ...	*			*			*			28	0	0	28	0	0	33	0	0	53	0	0	53	0	0	*			44	0	0	44	0	0	*			*			*			*		
Mysore ...	52	12	9	52	12	9	48	0	0	29	6	2	29	6	2	29	6	3	70	8	5	70	8	5	63	7	2	49	5	11	49	5	11	79	15	11	188	9	11	188	9	11	188	9	1
Hassan ...	68	9	2	68	9	2	68	9	2	34	4	7	34	4	7	34	4	7	68	9	2	51	6	10	51	6	10	68	9	2	68	9	2	85	11	5	171	6	10	171	6	10	137	2	3
Shimoga ...	55	15	5	55	15	5	55	10	10	24	6	10	24	6	10	32	8	0	55	15	5	55	15	5	49	1	0	58	2	0	65	1	8	85	5	10	226	11	6	189	13	0	187	13	10
Kadur ...	64	0	0	64	0	0	64	0	0	27	0	0	27	0	0	31	0	0	50	0	0	50	0	0	36	0	0	72	0	0	72	0	0	72	0	0	303	0	0	303	0	0	303	0	0
Chitaldrug	51	6	10	51	6	10	45	11	5	41	2	3	41	2	3	41	2	3	51	6	10	51	6	10	34	4	7	51	6	10	51	6	10	51	6	10	137	2	3	137	2	3	137	2	3

* Article not available.

419

Prices Current [Wholesale] of Food Grains, &c., at the Head-Quarters of the several Districts of the Mysore State during the fortnight ending 15th Apl. 1906—*contd.*

ಸನ್ 1906ನೆ ಇಸವಿ ಏಪ್ರಿಲ್ ಮಾಹೆ 15ನೆ ತಾರೀಖಿಗೆ ಆಖೈರಾದ ಪಂಧ್ರಾವಾಡಾ ಬಾಬತು ಒಟ್ಟುವ್ಯಾಪಾರದ ದುಕಾನಗಳಲ್ಲಿ ಪುರೋಖ್ತಾದ ಆಹಾರಜಿನಸಿ ವಗೈರೆ ನಿರಖುನಾಮಾ-ಡಿಸ್ಟ್ರಿಕ್ಟ್‌ಹೆಡ್ ಕ್ವಾರ್ಟರಗಳ ಬಾಬತು-ಸಶೇಷ.

Prices per 10 maunds of $82\frac{2}{7}$ lbs. each ಮಣ 1ಕ್ಕೆ $82\frac{2}{7}$ ಪಾನುಗಳ ಮೇರಿಗೆ ಮಣ 10ಕ್ಕೆ ಖರೀದಿ

District ಡಿಸ್ಟ್ರಿಕ್ಟ	Drugs and Narcotics			Fodder											
	Tobacco leaf Nicotiana tabacum and N. rustica ಹೊಗೆಸೊಪ್ಪು			Grass ಹಸೀ ಹುಲ್ಲು			Straw ಒಣ ಹುಲ್ಲು			Javar stalks ಜೋಳದ ಕಡ್ಡಿ					
	22			23			24			25					
	Present fortnight ಮುಜಕೂರ್ ಪಂಧ್ರಾವಾಡಾ	Past fortnight ಗುಜಷ್ತಾ ಪಂಧ್ರಾವಾಡಾ	Corresponding fortnight of last year ಗುಜಷ್ತಾ ಸಾಲ್ ಮೊಕಾಬಿಲಾ ಪಂಧ್ರಾವಾಡಾ	Present fortnight ಮುಜಕೂರ್ ಪಂಧ್ರಾವಾಡಾ	Past fortnight ಗುಜಷ್ತಾ ಪಂಧ್ರಾವಾಡಾ	Corresponding fortnight of last year ಗುಜಷ್ತಾ ಸಾಲ್ ಮೊಕಾಬಿಲಾ ಪಂಧ್ರಾವಾಡಾ	Present fortnight ಮುಜಕೂರ್ ಪಂಧ್ರಾವಾಡಾ	Past fortnight ಗುಜಷ್ತಾ ಪಂಧ್ರಾವಾಡಾ	Corresponding fortnight of last year ಗುಜಷ್ತಾ ಸಾಲ್ ಮೊಕಾಬಿಲಾ ಪಂಧ್ರಾವಾಡಾ	Present fortnight ಮುಜಕೂರ್ ಪಂಧ್ರಾವಾಡಾ	Past fortnight ಗುಜಷ್ತಾ ಪಂಧ್ರಾವಾಡಾ	Corresponding fortnight of last year ಗುಜಷ್ತಾ ಸಾಲ್ ಮೊಕಾಬಿಲಾ ಪಂಧ್ರಾವಾಡಾ
	Rs a p	Rs a p	Rs a p	Rs a p	Rs a p	Rs a p	Rs a p	Rs a p	Rs a p	Rs a p	Rs a p	Rs a p
Bangalore..	291 6 10	291 6 10	308 9 2	9 2 3	9 2 3	7 9 10	8 9 1	11 6 10	6 13 9	*	*	*
Kolar ...	No wholesale transactions			5 0 0	5 0 0	5 0 0	8 0 0	8 0 0	8 0 0	*	*	*
Tumkur ...	*	*	*	*	*	*	*	*	*	*	*	*
Mysore ...	280 3 3	280 3 3	280 8 3	11 6 4	11 6 4	10 6 10	6 8 2	6 8 2	6 8 2	6 0 0	6 0 0	6 12 0
Hassan ...	171 6 10	171 6 10	171 6 10	1 11 5	1 11 5	1 11 5	3 6 10	3 6 10	3 6 10	*	*	*
Shimoga ...	173 0 4	173 0 4	173 0 4	*	*	*	3 10 4	3 10 4	1 13 2	*	*	*
Kadur ..	303 0 0	303 0 0	303 0 0	*	*	*	22 0 0	22 0 0	22 0 0	*	*	*
Chitaldrug	137 2 3	137 2 3	137 2 3	*	*	*	13 11 5	13 11 5	13 11 5	13 11 5	13 11 5	10 4 7

* Article not available.

Prices Current [Wholesale] of Food Grains, &c., at the Head-Quarters of the several Districts of the Mysore State during the fortnight ending 15th Apl. 1906—*contd.*

ಸನ್ 1906ನೆ ಇಸವಿ ಏಪ್ರಿಲ್ ಮಾಹೆ 15ನೆ ತಾರೀಖಿಗೆ ಆಖೈರಾದ ಪಂಧ್ರಾವಾಡಾ ಬಾಬತು ಒಟ್ಟುವ್ಯಾಪಾರದ ದುಕಾನಗಳಲ್ಲಿ ಪುರೋಖ್ತಾದ ಆಹಾರಜಿನಸು ವಗೈರೆ ನಿರಖುನಾಮಾ-ಡಿಸ್ಟ್ರಿಕ್ಟ್‌ಹೆಡ್‌ಕ್ವಾರ್ಟರಗಳ ಬಾಬತು-ಸಕೇಷ.

Prices per 10 maunds of 82⅔ lbs. each ಮಣ 1ಕ್ಕೆ 82⅔ ಪಾನುಗಳ ಮೇರಿಗೆ 10 ಮಣಕ್ಕೆ ಖರೀದಿ

District ಡಿಸ್ಟ್ರಿಕ್ಟ	Garden produce																				
	Turmeric Curcuma longa ಅರಶಿನ									Coffee Coffea arabica ಕಾಫಿ											
	26									27											
	Present fortnight ಸಂಪ್ರತಿ ಪಂಧ್ರಾವಾಡಾ			Past fortnight ಗುಜಸ್ತಾ ಪಂಧ್ರಾವಾಡಾ			Corresponding fortnight of last year ಗುಜಸ್ತಾ ಸಾಲ್ ಸೊಕಾಬಿಲಾ ಪಂಧ್ರಾವಾಡಾ			Present fortnight ಸಂಪ್ರತಿ ಪಂಧ್ರಾವಾಡಾ			Past fortnight ಗುಜಸ್ತಾ ಪಂಧ್ರಾವಾಡಾ			Corresponding fortnight of last year ಗುಜಸ್ತಾ ಸಾಲ್ ಸೊಕಾಬಿಲಾ ಪಂಧ್ರಾವಾಡಾ			Present fortnight ಸಂಪ್ರತಿ ಪಂಧ್ರಾವಾಡಾ			Past fortnight ಗುಜಸ್ತಾ ಪಂಧ್ರಾವಾಡಾ			Corresponding fortnight of last year ಗುಜಸ್ತಾ ಸಾಲ್ ಸೊಕಾಬಿಲಾ ಪಂಧ್ರಾವಾಡಾ		
	Rs	a	p	Rs	a	p	Rs	a	p	Rs	a	p	Rs	a	p	Rs	a	p	Rs	a	p
Bangalore	111	6	10	111	6	10	53	9	1	342	13	8	342	13	8	342	13	8	1,371	6	10
Kolar ...	100	0	0	100	0	0	100	0	0	400	0	0	400	0	0	400	0	0	1,600	0	0
Tumkur ...	*			*			*			*			*			*			*		
Mysore ...	109	1	5	109	1	5	81	13	1	286	14	0	286	14	0	312	5	6	1,690	8	4
Hassan ...	102	13	9	102	13	9	85	11	5	308	9	2	308	9	2	274	4	7	1,028	9	1
Shimoga ...	136	15	8	113	5	4	58	2	0	250	12	6	250	12	6	273	15	4	1,095	15	10
Kadur ...	151	0	0	151	0	0	151	0	0	363	0	0	363	0	0	363	0	0	2,100	0	0
Chitaldrug	137	2	3	137	2	3	137	2	3	411	6	10	411	6	10	411	6	10	3,291	6	10

District ಡಿಸ್ಟ್ರಿಕ್ಟ	Cardamom Amomum aromaticum ಯಾಲಕ್ಕಿ									Supari Areca catechu ಅಡಿಕೆ								
	28									29								
	Present fortnight ಸಂಪ್ರತಿ ಪಂಧ್ರಾವಾಡಾ			Past fortnight ಗುಜಸ್ತಾ ಪಂಧ್ರಾವಾಡಾ			Corresponding fortnight of last year ಗುಜಸ್ತಾ ಸಾಲ್ ಸೊಕಾಬಿಲಾ ಪಂಧ್ರಾವಾಡಾ			Present fortnight ಸಂಪ್ರತಿ ಪಂಧ್ರಾವಾಡಾ			Past fortnight ಗುಜಸ್ತಾ ಪಂಧ್ರಾವಾಡಾ			Corresponding fortnight of last year ಗುಜಸ್ತಾ ಸಾಲ್ ಸೊಕಾಬಿಲಾ ಪಂಧ್ರಾವಾಡಾ		
	Rs	a	p	Rs	a	p	Rs	a	p	Rs	a	p	Rs	a	p	Rs	a	p
Bangalore	1,371	6	10	1,371	6	10	1,711	6	10	291	6	10	291	6	10	282	13	9
Kolar ...	1,600	0	0	1,600	0	0	1,600	0	0	400	0	0	400	0	0	400	0	0
Tumkur ...	*			*			*			*			*			*		
Mysore ...	1,690	8	4	1,690	8	4	1,690	8	4	308	9	2	308	9	2	342	13	8
Hassan ...	1,028	9	1	1,028	9	1	857	2	3	205	11	5	205	11	5	171	6	10
Shimoga ...	1,095	15	10	1,095	15	10	939	6	10	273	15	4	273	15	4	346	4	0
Kadur ...	2,100	0	0	2,100	0	0	2,424	0	0	363	0	0	363	0	0	363	0	0
Chitaldrug	3,291	6	10	3,291	6	10	3,291	6	10	205	11	5	205	11	5	205	11	5

* Article not available.

Prices Current [Wholesale] of Food Grains, &c., at the Head-Quarters of the several Districts of the Mysore State during the fortnight ending 15th April 1906—*concld.*

ಸನ್ 1906ನೆ ಇಸವಿ ಏಪ್ರಿಲ್ ಮಾಹೆ 15ನೆ ತಾರೀಖಿಗೆ ಆಖೈರಾದ ಪಂಧ್ರಾವಾಡಾ ಬಾಬತು ಒಟ್ಟು ವ್ಯಾಪಾರದ ದುಕಾನ್‌ಗಳಲ್ಲಿ ಪುರೋಖ್ತ್ ಆದ ಆಹಾರಜಿನಸಿ ವಗೈರೆ ನಿರಖುನಾಮಾ-ಡಿಸ್ಟ್ರಿಕ್ಟ್‌ಹೆಡ್ ಕ್ವಾರ್ಟರ್‌ಗಳ ಬಾಬತುಸಮಾಪ್ತಿ.

District ಡಿಸ್ಟ್ರಿಕ್ಟ್	Prices per 10 maunds of $82\frac{2}{7}$ lbs. each ಮಣ 1ಕ್ಕೆ $82\frac{2}{7}$ ಪೌನುಗಳ ಮೇರಿಗೆ 10 ಮಣಕ್ಕೆ ಖರೀದಿ																				
	Garden produce						Hides (cattle) ದನವಿನ ಚರ್ಮ						Plough bullocks (pair) ಉಳೋಎತ್ತುಗಳು ಜೊತೆ 1ಕ್ಕೆ						Sheep (score) ಕುರಿಗಳು 20ಕ್ಕೆ					
	Dry cocoanut cocos nucifera ಖೊಬರಿ																				
	30						31						32						33		
	Present fortnight ಸುಪಕ್ಷದ ಪಂಧ್ರಾವಾಡಾ	Past fortnight ಗುಜಷ್ತಾ ಪಂಧ್ರಾವಾಡಾ	Corresponding fortnight of last year ಗುಜಷ್ತಾ ಸಾಲ್ ಸೊಕಾಬಿನ ಪಂಧ್ರಾವಾಡಾ	Present fortnight ಸುಪಕ್ಷದ ಪಂಧ್ರಾವಾಡಾ	Past fortnight ಗುಜಷ್ತಾ ಪಂಧ್ರಾವಾಡಾ	Corresponding fortnight of last year ಗುಜಷ್ತಾ ಸಾಲ್ ಸೊಕಾಬಿನ ಪಂಧ್ರಾವಾಡಾ	Present fortnight ಸುಪಕ್ಷದ ಪಂಧ್ರಾವಾಡಾ	Past fortnight ಗುಜಷ್ತಾ ಪಂಧ್ರಾವಾಡಾ	Corresponding fortnight of last year ಗುಜಷ್ತಾ ಸಾಲ್ ಸೊಕಾಬಿನ ಪಂಧ್ರಾವಾಡಾ	Present fortnight ಸುಪಕ್ಷದ ಪಂಧ್ರಾವಾಡಾ	Past fortnight ಗುಜಷ್ತಾ ಪಂಧ್ರಾವಾಡಾ	Corresponding fortnight of last year ಗುಜಷ್ತಾ ಸಾಲ್ ಸೊಕಾಬಿನ ಪಂಧ್ರಾವಾಡಾ	Present fortnight ಸುಪಕ್ಷದ ಪಂಧ್ರಾವಾಡಾ	Past fortnight ಗುಜಷ್ತಾ ಪಂಧ್ರಾವಾಡಾ	Corresponding fortnight of last year ಗುಜಷ್ತಾ ಸಾಲ್ ಸೊಕಾಬಿನ ಪಂಧ್ರಾವಾಡಾ
	Rs a p	Rs a p	Rs a p	Rs a p	Rs a p	Rs a p	Rs a p	Rs a p	Rs a p	Rs a p	Rs a p	Rs a p	Rs a p	Rs a p	Rs a p	Rs a p	Rs a p	Rs a p
Bangalore ..	154 4 7	154 4 7	120 0 0	437 2 3	437 2 3	437 2 3	120 to 150	120 to 150	120 to 150	160 0 0	160 0 0	160 0 0
Kolar ...	133 0 0	133 0 0	133 0 0	190 0 0	190 0 0	190 0 0	100 0 0	100 0 0	100 0 0	100 0 0	100 0 0	100 0 0
Tumkur ..	*	*	*	*	*	*	25 0 0	25 0 0	*	80 0 0	80 0 0	*
Mysore ...	108 9 1	108 9 1	126 10 8	514 4 6	514 4 6	514 4 6	70 0 0	70 0 0	70 0 0	100 0 0	100 0 0	100 0 0
Hassan ...	164 9 2	164 9 2	164 9 2	164 9 2	164 9 2	164 9 2	30 0 0	30 0 0	30 0 0	100 0 0	100 0 0	100 0 0
Shimoga ...	136 15 8	136 15 8	136 15 8	273 15 4	273 15 4	273 15 4	60 0 0	60 0 0	50 0 0	40 0 0	40 0 0	60 0 0
Kadur ..	193 0 0	193 0 0	193 0 0	2 0 0 per hide.	2 0 0 per hide.	2 0 0 per hide.	40 0 0	40 0 0	40 0 0	60 0 0	60 0 0	60 0 0
Chitaldrug	†137 2 3	137 2 3	137 2 3	137 2 3	137 2 3	137 2 3	from 20 to 80 Rs.	from 20 to 80 Rs.	from 20 to 80 Rs	from 80 to 120 Rs. Per	from 80 to 120 Rs. score	from 80 to 120 Rs.

*Articles not available. | † The prices of ragi, jola and horsegram have risen owing to their export to other parts and want of rain.

422

Prices Current [Retail] of Food Grains, &c., at the Head-Quarters of the several Districts of the Mysore State during the fortnight ending 15th April 1906

ಸನ್ 1906ನೆ ಇಸವಿ ಏಪ್ರಿಲ್ ಮಾಹೆ 15ನೆ ತಾರೀಖಿಗೆ ಆಖೈರಾದ ಪಂಧ್ರಾವಾಡಾ ಬಾಬತು ಒಟ್ಟು ವ್ಯಾಪಾರದ ಚಿಲ್ಲರೆ ಆಂಗಡಿಗಳಲ್ಲಿ ಪುರೋಖ್ತ್ ಆದ ಆಹಾರಜಿನಸಿವಗೈರೆನಿರಖುನಾಮಾಡಿಸ್ಟ್ರಿಕ್ಟ್ ಹೆಡ್ ಕ್ವಾರ್ಟರ್‌ಗಳ ಬಾಬತು.

Quantity per rupee by the standard seer of 80 tolas, *vide* Government of India No. 1—21, dated 10th February 1874

ಸನ್ 1874ನೆ ಇಸವಿ ಫೆಬ್ರುವರಿ 10ನೆ ಮುರಕೂಂ 1—21ನೆ ನಂಬರು ಇಂಡಿಯಾ ಗವರ್ನಮೆಂಟ್ ಆರ್ಡರ್ ಅನುಸರಿಸಿ ರೂಪಾಯಿ ಒಕ್ಕೆ ೮೦ ತೊಲಾ ತೂಕದ ಬಾಬತು ಶೇರುಗಳು

District ಡಿಸ್ಟ್ರಿಕ್ಟ್	Grains and Pulses ಧಾನ್ಯ ಮತ್ತು ಕಾಳುಗಳು																													
	Rice unhusked (paddy) Oryza sativa ಭತ್ತ						Rice, best sort ಅವಲ್ ತರಹೆ ಅಕ್ಕಿ						Rice, common ಸಾಧಾರಣ ಅಕ್ಕಿ						Wheat Triticum sativum ಹೊಟ್ಟೆ ಗೋಧಿ						Barley Hordeum vulgare ಜವೆ ಗೋಧಿ					
	2						3						4						5						6					
	Present fortnight ಸಜಕ್ಕೂರ್ ಪಂಧ್ರಾವಾಡಾ		Past fortnight ಗುಜಷ್ತಾ ಪಂಧ್ರಾವಾಡಾ		Corresponding fortnight of last year ಗುಜಷ್ತಾ ಸಾಲ್ ಸೊಕಾಬಿಲಾ ಪಂಧ್ರಾವಾಡಾ		Present fortnight ಸಜಕ್ಕೂರ್ ಪಂಧ್ರಾವಾಡಾ		Past fortnight ಗುಜಷ್ತಾ ಪಂಧ್ರಾವಾಡಾ		Corresponding fortnight of last year ಗುಜಷ್ತಾ ಸಾಲ್ ಸೊಕಾಬಿಲಾ ಪಂಧ್ರಾವಾಡಾ		Present fortnight ಸಜಕ್ಕೂರ್ ಪಂಧ್ರಾವಾಡಾ		Past fortnight ಗುಜಷ್ತಾ ಪಂಧ್ರಾವಾಡಾ		Corresponding fortnight of last year ಗುಜಷ್ತಾ ಸಾಲ್ ಸೊಕಾಬಿಲಾ ಪಂಧ್ರಾವಾಡಾ		Present fortnight ಸಜಕ್ಕೂರ್ ಪಂಧ್ರಾವಾಡಾ		Past fortnight ಗುಜಷ್ತಾ ಪಂಧ್ರಾವಾಡಾ		Corresponding fortnight of last year ಗುಜಷ್ತಾ ಸಾಲ್ ಸೊಕಾಬಿಲಾ ಪಂಧ್ರಾವಾಡಾ		Present fortnight ಸಜಕ್ಕೂರ್ ಪಂಧ್ರಾವಾಡಾ		Past fortnight ಗುಜಷ್ತಾ ಪಂಧ್ರಾವಾಡಾ		Corresponding fortnight of last year ಗುಜಷ್ತಾ ಸಾಲ್ ಸೊಕಾಬಿಲಾ ಪಂಧ್ರಾವಾಡಾ	
-	Srs	ch	Srs	ch	Srs	ch	Srs	ch	Srs	ch	Srs	ch	Srs	ch	Srs	ch	Srs	ch	Srs	ch	Srs	ch	Srs	ch	Srs	ch	Srs	ch	Srs	ch
Bangalore ...	16	10	16	10	25	6	7	12	7	3	8	10	8	10	8	5	10	6	10	9	10	0	12	5	*	*	*	*	*	*
Kolar ..	18	0	18	0	20	0	7	0	7	0	8	0	7	8	7	8	9	0	8	0	8	0	10	0	8	0	8	0	10	0
Tumkur ...	18	0	18	0	21	0	6	8	6	8	8	8	8	0	8	0	9	0	7	0	10	0	10	0	7	0	7	0	10	0
Mysore ...	16	12	16	12	17	0	7	0	7	0	9	0	8	4	8	4	10	11	6	4	6	4	11	5	*	*	*	*	*	*
Hassan ...	20	0	20	0	26	10	7	8	7	8	9	0	8	0	8	0	10	0	8	0	10	0	10	0	8	0	10	0	10	0
Shimoga ..	21	0	23	2	25	3	7	6	7	6	8	6	8	6	8	6	11	9	7	6	7	6	11	9	*	*	*	*	*	*
Kadur ..	24	0	24	0	25	0	7	0	7	0	8	0	8	0	8	0	10	0	8	0	8	0	10	0	11	0	11	0	11	0
Chitaldrug ...	16	0	16	0	24	0	7	0	7	0	9	0	8	0	8	0	10	0	8	0	8	0	12	0	8	0	8	0	12	0

* Article not available.

Prices Current [Retail] of Food Grains, &c., at the Head-Quarters of the several Districts of the Mysore State during the fortnight ending 15th Apl. 1906—*contd.*

ಸನ್ 1906ನೆ ಇಸವಿ ಏಪ್ರಿಲ್ ಮಾಹೇ 15ನೆ ತಾರೀಖಿಗೆ ಆಖೈರಾದ ಪಂಧ್ರಾವಾಡಾ ಬಾಬತು ಜಿಲ್ಲೆರೆ ಅಂಗಡಿಗಳಲ್ಲಿ ಪ್ರಚಲಿತ್ತಾದ ಆಹಾರ ಜಿನಸಿ ವಗೈರೆ ನಿರಖುನಾಮಾ—ಡಿಸ್ಟ್ರಿಕ್ಟ್ ಹೆಡ್ ಕ್ವಾರ್ಟರಗಳ ಬಾಬತು-ಸಕೇಪ.

Quantity per rupee by the standard seer of 80 tolas, &c.—*continued.* ರೂ. 1ಕ್ಕೆ 80 ತೊಲಾ ತೂಕದ ಬಾಬತು ಶೇರುಗಳು—ಸಕೇಪ.

Grains and Pulses ಧಾನ್ಯ ಮತ್ತು ಕಾಳುಗಳು

District ಡಿಸ್ಟ್ರಿಕ್ಟ್	Cholam or javar Sorghum vulgare ಜೋಳ 7						Kambu or Bajra Pennisetum typhoideum ಸಜ್ಜೆ 8						Ragi Eleusine coracana ರಾಗಿ 9						Maize Zeamays ಮುಸಕಿನ ಜೋಳ 10						Bengal gram Cicer arietinum ಕಡಲೆ 11					
	Present fortnight ಪಂಜಕ್ಕೊರ್ ಪಂಧ್ರಾವಾಡಾ		Past fortnight ಗುಜಷ್ಟಾ ಪಂಧ್ರಾವಾಡಾ		Corresponding fortnight of last year ಗುಜಷ್ಟಾ ಸಾಲ್ ವೊಕಾಬಿಲಾ ಪಂಧ್ರಾವಾಡಾ		Present fortnight ಪಂಜಕ್ಕೊರ್ ಪಂಧ್ರಾವಾಡಾ		Past fortnight ಗುಜಷ್ಟಾ ಪಂಧ್ರಾವಾಡಾ		Corresponding fortnight of last year ಗುಜಷ್ಟಾ ಸಾಲ್ ವೊಕಾಬಿಲಾ ಪಂಧ್ರಾವಾಡಾ		Present fortnight ಪಂಜಕ್ಕೊರ್ ಪಂಧ್ರಾವಾಡಾ		Past fortnight ಗುಜಷ್ಟಾ ಪಂಧ್ರಾವಾಡಾ		Corresponding fortnight of last year ಗುಜಷ್ಟಾ ಸಾಲ್ ವೊಕಾಬಿಲಾ ಪಂಧ್ರಾವಾಡಾ		Present fortnight ಪಂಜಕ್ಕೊರ್ ಪಂಧ್ರಾವಾಡಾ		Past fortnight ಗುಜಷ್ಟಾ ಪಂಧ್ರಾವಾಡಾ		Corresponding fortnight of last year ಗುಜಷ್ಟಾ ಸಾಲ್ ವೊಕಾಬಿಲಾ ಪಂಧ್ರಾವಾಡಾ		Present fortnight ಪಂಜಕ್ಕೊರ್ ಪಂಧ್ರಾವಾಡಾ		Past fortnight ಗುಜಷ್ಟಾ ಪಂಧ್ರಾವಾಡಾ		Corresponding fortnight of last year ಗುಜಷ್ಟಾ ಸಾಲ್ ವೊಕಾಬಿಲಾ ಪಂಧ್ರಾವಾಡಾ	
	Srs	ch	Srs	ch	Srs	ch	Srs	ch	Srs	ch	Srs	ch	Srs	ch	Srs	ch	Srs	ch	Srs	ch	Srs	ch	Srs	ch	Srs	ch	Srs	ch	Srs	ch
Bangalore	*	*	*	*	*	*	*	*	*	*	*	*	18	8	17	0	18	0	3 maizes for pies.	4	3 maizes for pies.	4	3 maizes for pies.	4	8	6	9	7	12	1
Kolar ...	*	*	*	*	*	*	*	*	*	*	*	*	15	0	15	0	20	0	*	*	*	*	*	*	9	0	9	0	10	0
Tumkur ...	16	0	16	0	21	0	*	*	*	*	*	*	18	0	18	0	20	0	*	*	*	*	*	*	9	0	9	0	10	0
Mysore ...	13	0	13	0	22	8	*	*	*	*	*	*	15	0	15	0	18	0	*	*	*	*	*	*	9	0	9	0	12	1
Hassan ...	*	*	*	*	*	*	*	*	*	*	*	*	16	0	16	0	18	3	*	*	*	*	*	*	8	0	8	0	10	0
Shimoga ...	14	11	14	11	25	3	*	*	*	*	*	*	16	13	16	13	25	3	*	*	*	*	*	*	7	6	8	6	12	1
Kadur ...	17	0	17	0	23	0	*	*	*	*	*	*	16	0	16	0	20	0	*	*	*	*	*	*	8	0	8	0	12	0
Chitaldrug	13	0	16	0	24	0	16	0	16	0	24	0	15	0	16	0	24	0	*	*	*	*	*	*	8	0	8	0	12	0

* Article not available.

Prices Current [Retail] of Food Grains, &c., at the Head-Quarters of the several Districts of the Mysore State during the fortnight ending 15th April 1906.—*contd.*
ಸನ 1906ನೆ ಇಸವಿ ಏಪ್ರಿಲ್ ಮಾಹೇ 15ನೆ ತಾರೀಖಿಗೆ ಆಖೈರಾದ ಪಂಧ್ರಾವಾಡಾ ಬಾಬತು ಜಿಲ್ಲರೆ ಅಂಗಡಿಗಳಲ್ಲಿ ಫುರೋಖ್ತ್ ಆದ ಆಹಾರ ಜಿನಸಿ ವಗೈರೆ ನಿರಖುನಾಮಾ— ಡಿಸ್ಟ್ರಿಕ್ಟ್ ಹೆಡ್ ಕ್ವಾರ್ಟರ್‌ಗಳ ಬಾಬತು—ಸಶೇಷ.

Quantity per rupee by the standard seer of 80 tolas, &c.—*continued.* ರೂ. 1ಕ್ಕೆ 80 ತೊಲಾ ತೂಕದ ಬಾಬತು ಶೇರುಗಳು—ಸಶೇಷ.

District ಡಿಸ್ಟ್ರಿಕ್ಟ್	Grains and Pulses ಧಾನ್ಯ ಮತ್ತು ಕಾಳುಗಳು																								Ghee (Clarified butter) ತುಪ್ಪ					
	Horse gram Dolichos biflorus ಹುರಳಿ						Arhar Cajanus indicus ತೊಗರಿ						Arhar Dal ತೊಗರಿ ಬ್ಯಾಳೆ						Kangani Setaria italica ನವಣೆ											
	12						13						14						15						16					
	Present fortnight ಸಜಿಕ್ಕೊರ್ ಪಂಧ್ರಾವಾಡಾ		Past fortnight ಗುಜಿಷ್ತಾ ಪಂಧ್ರಾವಾಡಾ		Corresponding fortnight of last year ಗುಜಿಷ್ತಾ ಸಾಲ್ ಸೊಕಾಬಿಲಾ ಪಂಧ್ರಾವಾಡಾ		Present fortnight ಸಜಿಕ್ಕೊರ್ ಪಂಧ್ರಾವಾಡಾ		Past fortnight ಗುಜಿಷ್ತಾ ಪಂಧ್ರಾವಾಡಾ		Corresponding fortnight of last year ಗುಜಿಷ್ತಾ ಸಾಲ್ ಸೊಕಾಬಿಲಾ ಪಂಧ್ರಾವಾಡಾ		Present fortnight ಸಜಿಕ್ಕೊರ್ ಪಂಧ್ರಾವಾಡಾ		Past fortnight ಗುಜಿಷ್ತಾ ಪಂಧ್ರಾವಾಡಾ		Corresponding fortnight of last year ಗುಜಿಷ್ತಾ ಸಾಲ್ ಸೊಕಾಬಿಲಾ ಪಂಧ್ರಾವಾಡಾ		Present fortnight ಸಜಿಕ್ಕೊರ್ ಪಂಧ್ರಾವಾಡಾ		Past fortnight ಗುಜಿಷ್ತಾ ಪಂಧ್ರಾವಾಡಾ		Corresponding fortnight of last year ಗುಜಿಷ್ತಾ ಸಾಲ್ ಸೊಕಾಬಿಲಾ ಪಂಧ್ರಾವಾಡಾ		Present fortnight ಸಜಿಕ್ಕೊರ್ ಪಂಧ್ರಾವಾಡಾ		Past fortnight ಗುಜಿಷ್ತಾ ಪಂಧ್ರಾವಾಡಾ		Corresponding fortnight of last year ಗುಜಿಷ್ತಾ ಸಾಲ್ ಸೊಕಾಬಿಲಾ ಪಂಧ್ರಾವಾಡಾ		Present fortnight ಸಜಿಕ್ಕೊರ್ ಪಂಧ್ರಾವಾಡಾ		Past fortnight ಗುಜಿಷ್ತಾ ಪಂಧ್ರಾವಾಡಾ		Corresponding fortnight of last year ಗುಜಿಷ್ತಾ ಸಾಲ್ ಸೊಕಾಬಿಲಾ ಪಂಧ್ರಾವಾಡಾ	
	Srs	ch	Srs	ch	Srs	ch	Srs	ch	Srs	ch	Srs	ch	Srs	ch	Srs	ch	Srs	ch	Srs	ch	Srs	ch	Srs	ch	Srs	ch	Srs	ch	Srs	ch
Bangalore	15	10	15	10	15	10	15	12	16	5	12	15	8	8	8	8	8	8	*	*	*	*	*	*	0	15	0	15	1	2
Kolar ...	14	0	14	0	15	0	*	*	*	*	*	*	9	0	9	0	8	0	*	*	*	*	*	*	1	0	1	0	1	0
Tumkur ...	14	0	14	0	14	0	12	0	12	0	13	8	8	0	8	0	8	0	*	*	*	*	*	*	1	0	1	0	1	0
Mysore ...	13	0	13	0	15	15	13	0	13	0	13	2	10	8	10	8	7	5	*	*	*	*	*	*	3	4	3	4	1	3
Hassan ...	11	0	12	0	12	0	11	0	12	0	12	0	8	0	8	0	9	0	*	*	*	*	*	*	1	0	1	0	1	0
Shimoga ...	11	9	11	9	13	10	12	10	11	9	14	11	8	6	8	6	8	6	*	*	*	*	*	*	0	15	1	3	1	1
Kadur ...	11	0	11	0	12	0	12	0	12	0	12	0	9	0	9	0	9	0	*	*	*	*	*	*	1	3	1	3	1	3
Chitaldrug	12	0	14	0	16	0	14	0	14	0	14	0	8	0	8	0	9	0	20	0	20	0	30	0	1	0	1	0	1	0

*Article not available.

Prices Current [Retail] of Food Grains, &c., at the Head-Quarters of the several Districts of the Mysore State during the fortnight ending 15th April 1906—*contd.*

ಸನ್ 1906ನೆ ಇಸವಿ ಏಪ್ರೆಲ್ ಮಾಹೇ 15ನೆ ತಾರೀಖಿಗೆ ಆಖೈರಾದ ಪಂಧ್ರಾವಾಡಾ ಬಾಬತು ಬೆಲ್ಲರೆ ಅಂಗಡಿಗಳಲ್ಲಿ ಫುರೋಖ್ತ್ ಆದ ಆಹಾರಜಿನಸಿ ವಗೈರೆ ನಿರಖುನಾಮಾ—ಡಿಸ್ಟ್ರಿಕ್ಟ್ ಹೆಡ್ ಕ್ವಾರ್ಟರ್‌ಗಳ ಬಾಬತು—ಸಶೇಷ.

Quantity per rupee by the standard seer of 80 tolas, &c.—*continued.* ರೂ. 1ಕ್ಕೆ 80 ತೊಲಾ ತೂಕದ ಬಾಬತು ಶೇರುಗಳು—ಸಶೇಷ.

District ಡಿಸ್ಟ್ರಿಕ್ಟ್	Wheat Flour ಗೋಧಿ ಹಿಟ್ಟು 17						Sea Salt ಕಲ್ಲುಪ್ಪು 18						Oil Seeds: Gingelly Sesamum indicum ಎಳ್ಳು 19						Sugar: Goor or jaggory ಬೆಲ್ಲ 20						Fibres: Cotton cleaned Gossypium ಅರಳೆ 21					
	Present fortnight ಸಂಪ್ರತಿಗೆ ಪಂಧ್ರಾವಾಡಾ		Past fortnight ಗುಜಿಷ್ತಾ ಪಂಧ್ರಾವಾಡಾ		Corresponding fortnight of last year ಗುಜಿಷ್ತಾ ಸಾಲ್ ಸೊಕಾಬಿಲಾ ಪಂಧ್ರಾವಾಡಾ		Present fortnight ಸಂಪ್ರತಿಗೆ ಪಂಧ್ರಾವಾಡಾ		Past fortnight ಗುಜಿಷ್ತಾ ಪಂಧ್ರಾವಾಡಾ		Corresponding fortnight of last year ಗುಜಿಷ್ತಾ ಸಾಲ್ ಸೊಕಾಬಿಲಾ ಪಂಧ್ರಾವಾಡಾ		Present fortnight ಸಂಪ್ರತಿಗೆ ಪಂಧ್ರಾವಾಡಾ		Past fortnight ಗುಜಿಷ್ತಾ ಪಂಧ್ರಾವಾಡಾ		Corresponding fortnight of last year ಗುಜಿಷ್ತಾ ಸಾಲ್ ಸೊಕಾಬಿಲಾ ಪಂಧ್ರಾವಾಡಾ		Present fortnight ಸಂಪ್ರತಿಗೆ ಪಂಧ್ರಾವಾಡಾ		Past fortnight ಗುಜಿಷ್ತಾ ಪಂಧ್ರಾವಾಡಾ		Corresponding fortnight of last year ಗುಜಿಷ್ತಾ ಸಾಲ್ ಸೊಕಾಬಿಲಾ ಪಂಧ್ರಾವಾಡಾ		Present fortnight ಸಂಪ್ರತಿಗೆ ಪಂಧ್ರಾವಾಡಾ		Past fortnight ಗುಜಿಷ್ತಾ ಪಂಧ್ರಾವಾಡಾ		Corresponding fortnight of last year ಗುಜಿಷ್ತಾ ಸಾಲ್ ಸೊಕಾಬಿಲಾ ಪಂಧ್ರಾವಾಡಾ	
	Srs	ch	Srs	ch	Srs	ch	Srs	ch	Srs	ch	Srs	ch	Srs	ch	Srs	ch	Srs	ch	Srs	ch	Srs	ch	Srs	ch	Srs	ch	Srs	ch	Srs	ch
Bangalore	6	12	6	12	7	5	14	15	14	15	11	8	5	4	5	4	6	9	8	0	8	0	6	0	1	14	1	14	1	14
Kolar ...	8	0	8	0	8	0	15	0	15	0	12	0	8	0	8	0	8	0	9	0	9	0	9	0	*	*	*	*	*	*
Tumkur ..	7	0	7	0	8	0	13	0	13	0	12	0	8	0	8	0	8	0	4	0	4	0	4	0	2	0	2	0	2	0
Mysore ...	9	0	9	0	7	4	13	0	13	0	13	10	6	4	6	4	6	9	† 7	14	† 7	14	5	4	7	8	7	8	2	4
Hassan ...	6	0	6	0	6	0	12	0	12	0	12	0	6	0	8	0	8	0	6	0	6	0	5	0	2	6	2	6	3	0
Shimoga ..	7	3	7	6	7	6	16	13	16	13	12	10	7	6	7	6	8	6	7	3	6	5	4	13	1	13	2	3	2	3
Kadur ..	6	0	6	0	6	0	14	0	14	0	12	0	8	0	8	0	10	0	5	4	5	4	5	4	1	5	1	5	1	5
Chitaldrug	8	0	8	0	9	0	10	0	10	0	10	0	8	0	8	0	12	0	8	0	8	0	8	0	3	0	3	0	3	0

* Article not available. † 21—0 shown in the previous statements represented cakes and not seers and chataks.

Prices Current [Retail] of Food Grains, &c., at the Head-Quarters of the several Districts of the Mysore State during the fortnight ending 15th Apl. 1906—*contd.*
ಸನ 1906ನೆ ಇಸವಿ ಏಪ್ರಿಲ್ ಮಾಹೇ 15 ನೆ ತಾರೀಖಿಗೆ ಆಖೈರಾದ ಪಂಧ್ರಾವಾಡಾ ಬಾಬತು ಜಿಲ್ಲರೆ ಅಂಗಡಿಗಳಲ್ಲಿ ಪುರೋಖ್ತ ಆದ ಆಹಾರ ಜಿನಸಿ ವಗೈರೆ ನಿರಖುನಾಮಾ—ಡಿಸ್ಟ್ರಿಕ್ಟ ಹೆಡ್ ಕ್ವಾರ್ಟರಿಗಳ ಬಾಬತು—ಸಶೇಷ.

Quantity per rupee by the standard seer of 80 tolas, &c.—*continued.* ರೂ. 1ಕ್ಕೆ 80 ತೊಲಾ ತೂಕದ ಬಾಬತು ಶೇರುಗಳು—ಸಶೇಷ.

District ಡಿಸ್ಟ್ರಿಕ್ಟ	Drugs and Narcotics						Fodder																		Garden produce											
	Tobacco leaf Nicotiana tabacum and N. rustica ಹೊಗೆಸೊಪ್ಪು						Grass ಹಸೀ ಹುಲ್ಲು						Straw ವಣಹುಲ್ಲು						Javar stalks ಜೋಳದ ಕಡ್ಡಿ						Turmeric Curcuma longa ಅರಿಶಿನ						Coffee Coffea arabica ಕಾಫಿ					
	22						23						24						25						26						27					
	Present fortnight ಸುಜಕ್ಕೂರ್ ಪಂಧ್ರಾವಾಡಾ		Past fortnight ಗುಜಷ್ತಾ ಪಂಧ್ರಾವಾಡಾ		Corresponding fortnight of last year ಗುಜಷ್ತಾ ಸಾಲ್ ಸೊಕಾಬಿಲಾ ಪಂಧ್ರಾವಾಡಾ		Present fortnight ಸುಜಕ್ಕೂರ್ ಪಂಧ್ರಾವಾಡಾ		Past fortnight ಗುಜಷ್ತಾ ಪಂಧ್ರಾವಾಡಾ		Corresponding fortnight of last year ಗುಜಷ್ತಾ ಸಾಲ್ ಸೊಕಾಬಿಲಾ ಪಂಧ್ರಾವಾಡಾ		Present fortnight ಸುಜಕ್ಕೂರ್ ಪಂಧ್ರಾವಾಡಾ		Past fortnight ಗುಜಷ್ತಾ ಪಂಧ್ರಾವಾಡಾ		Corresponding fortnight of last year ಗುಜಷ್ತಾ ಸಾಲ್ ಸೊಕಾಬಿಲಾ ಪಂಧ್ರಾವಾಡಾ		Present fortnight ಸುಜಕ್ಕೂರ್ ಪಂಧ್ರಾವಾಡಾ		Past fortnight ಗುಜಷ್ತಾ ಪಂಧ್ರಾವಾಡಾ		Corresponding fortnight of last year ಗುಜಷ್ತಾ ಸಾಲ್ ಸೊಕಾಬಿಲಾ ಪಂಧ್ರಾವಾಡಾ		Present fortnight ಸುಜಕ್ಕೂರ್ ಪಂಧ್ರಾವಾಡಾ		Past fortnight ಗುಜಷ್ತಾ ಪಂಧ್ರಾವಾಡಾ		Corresponding fortnight of last year ಗುಜಷ್ತಾ ಸಾಲ್ ಸೊಕಾಬಿಲಾ ಪಂಧ್ರಾವಾಡಾ	
	Srs	ch	Srs	ch	Srs	ch	Srs	ch	Srs	ch	Srs	ch	Srs	ch	Srs	ch	Srs	ch	Srs	ch	Srs	ch	Srs	ch	Srs	ch	Srs	ch	Srs	ch	Srs	ch	Srs	ch	Srs	ch
Bangalore ...	1	5	1	5	1	4	45	0	45	0	54	0	48	0	36	0	60	0	*	*	*	*	*	*	3	6	3	6	7	6	1	2	1	2	1	2
Kolar ...	2	8	2	8	2	8	75	0	75	0	75	0	50	0	50	0	50	0	*	*	*	*	*	*	4	0	4	0	4	0	1	0	1	0	1	0
Tumkur ...	2	6	2	6	1	8	80	0	80	0	80	0	32	0	32	0	32	0	*	*	*	*	*	*	4	0	4	0	4	0	1	0	1	0	1	0
Mysore ...	3	12	3	12	1	3	120	0	120	0	100	0	140	0	140	0	170	0	110	0	110	0	104	0	12	0	12	0	5	4	5	0	5	0	1	2
Hassan ...	2	6	2	6	2	6	240	0	240	0	240	0	120	0	120	0	120	0	*	*	*	*	*	*	4	0	4	0	5	0	1	5	1	5	1	8
Shimoga ..	2	6	2	6	2	6	*	*	*	*	*	*	112	0	112	0	224	0	*	*	*	*	*	*	3	0	3	10	4	13	1	10	1	10	1	3
Kadur ..	1	5	1	5	1	5	*	*	*	*	*	*	17	9	17	9	17	9	*	*	*	*	*	*	2	10	2	10	2	10	1	3	1	3	1	3
Chitaldrug ..	3	0	3	0	3	0	*	*	*	*	*	*	30	0	30	0	30	0	30	0	30	0	40	0	3	0	3	0	3	0	1	0	1	0	1	0

* Article not available.

4 26

Prices Current [Retail] of Food Grains, &c., at the Head-Quarters of the several Districts of the Mysore State during the fortnight ending 15th April 1906—*concld.*

ಸನ 1906ನೆ ಇಸವಿ ಏಪ್ರಿಲ್ ಮಾಹೆ 15ನ ತಾರೀಖಿಗೆ ಆಖೈರಾದ ಪಂಧ್ರಾವಾಡಾ ಬಾಬತು ಚಿಲ್ಲರೆ ಅಂಗಡಿಗಳಲ್ಲಿ ಸ್ವರೋಖ್ತ ಆದ ಆಹಾರಜಿನಸಿ ವಗೈರೆ ನಿರಖುನಾಮಾ—ಡಿಸ್ಟ್ರಿಕ್ಟ ಹೆಡ್ ಕ್ವಾರ್ಟರ್‌ಗಳ ಬಾಬತು-ಸಮಾಪ್ತಿ.

Quantity per rupee by the standard seer of 80 tolas, &c.—*concluded*
ರೂ. 1ಕ್ಕೆ 80 ತೊಲಾ ತೂಕದ ಬಾಬತು ಶೇರುಗಳು—ಸಮಾಪ್ತಿ

District ಡಿಸ್ಟ್ರಿಕ್ಟ	Garden produce. Cardamom Amomum Aromaticum ಯಾಲಕ್ಕಿ 28						Garden produce. Supari Areca catechu ಅಡಿಕೆ 29						Garden produce. Dry cocoanut Cocos nucifera ಖೊಬರಿ 30						Hides (cattle) ದನವಿನ ಚರ್ಮ 31						Plough bullocks (pair) ಉಳೋ ಎತ್ತುಗಳು ಜೊತೆ 1ಕ್ಕೆ 32			Sheep (score) ಕುರಿಗಳು 20ಕ್ಕೆ 33		
	Present fortnight ಪ್ರಸಕ್ತಾರ್ ಪಂಧ್ರಾವಾಡಾ		Past fortnight ಗುಜಷ್ತಾ ಪಂಧ್ರಾವಾಡಾ		Corresponding fortnight of last year ಗುಜಷ್ತಾ ಸಾಲ್ ಸೊಕಾಬಿಲಾ ಪಂಧ್ರಾವಾಡಾ		Present fortnight ಪ್ರಸಕ್ತಾರ್ ಪಂಧ್ರಾವಾಡಾ		Past fortnight ಗುಜಷ್ತಾ ಪಂಧ್ರಾವಾಡಾ		Corresponding fortnight of last year ಗುಜಷ್ತಾ ಸಾಲ್ ಸೊಕಾಬಿಲಾ ಪಂಧ್ರಾವಾಡಾ		Present fortnight ಪ್ರಸಕ್ತಾರ್ ಪಂಧ್ರಾವಾಡಾ		Past fortnight ಗುಜಷ್ತಾ ಪಂಧ್ರಾವಾಡಾ		Corresponding fortnight of last year ಗುಜಷ್ತಾ ಸಾಲ್ ಸೊಕಾಬಿಲಾ ಪಂಧ್ರಾವಾಡಾ		Present fortnight ಪ್ರಸಕ್ತಾರ್ ಪಂಧ್ರಾವಾಡಾ		Past fortnight ಗುಜಷ್ತಾ ಪಂಧ್ರಾವಾಡಾ		Corresponding fortnight of last year ಗುಜಷ್ತಾ ಸಾಲ್ ಸೊಕಾಬಿಲಾ ಪಂಧ್ರಾವಾಡಾ		Present fortnight ಪ್ರಸಕ್ತಾರ್ ಪಂಧ್ರಾವಾಡಾ	Past fortnight ಗುಜಷ್ತಾ ಪಂಧ್ರಾವಾಡಾ	Corresponding fortnight of last year ಗುಜಷ್ತಾ ಸಾಲ್ ಸೊಕಾಬಿಲಾ ಪಂಧ್ರಾವಾಡಾ	Present fortnight ಪ್ರಸಕ್ತಾರ್ ಪಂಧ್ರಾವಾಡಾ	Past fortnight ಗುಜಷ್ತಾ ಪಂಧ್ರಾವಾಡಾ	Corresponding fortnight of last year ಗುಜಷ್ತಾ ಸಾಲ್ ಸೊಕಾಬಿಲಾ ಪಂಧ್ರಾವಾಡಾ
	Srs	ch	Srs	ch	Srs	ch	Srs	ch	Srs	ch	Srs	ch	Srs	ch	Srs	ch	Srs	ch	Srs	ch	Srs	ch	Srs	ch	Rs a p	Rs a p	Rs a p	Rs a p	Rs a p	Rs a p
Bangalore .	0	4	0	4	0	3	1	5	1	5	1	6	2	6	2	6	3	3	0	15	0	15	0	15	120 to 150	120 to 150	120 to 150	160 0 0	160 0 0	160 0 0
Kolar ...	0	4	0	4	0	4	1	0	1	0	1	0	3	0	3	0	3	0	2	0	2	0	2	0	100 0 0	100 0 0	100 0 0	100 0 0	100 0 0	100 0 0
Tumkur ...	0	2	0	2	0	2	1	4	1	4	1	4	3	0	3	0	2	8	1	0	1	0	1	0	40 0 0	40 0 0	40 0 0	100 0 0	100 0 0	80 0 0
Mysore ...	2	0	2	0	0	5	4	4	4	4	1	9	14	0	14	0	1	14	0	10	0	10	0	10	70 0 0	70 0 0	70 0 0	100 0 0	100 0 0	100 0 0
Hassan ...	0	6	0	6	0	7	2	0	2	0	2	6	2	8	2	8	2	8	2	8	2	8	2	8	30 0 0	30 0 0	30 0 0	100 0 0	100 0 0	100 0 0
Shimoga ...	0	6	0	6	0	7	1	8	1	8	1	3	3	0	3	0	3	0	1	8	1	8	1	8	60 0 0	60 0 0	50 0 0	40 0 0	40 0 0	60 0 0
Kadur ...	0	6	0	6	0	3	1	3	1	3	1	3	2	1	2	1	2	1	Rs a p 2 0 0		Rs a p 2 0 0		Rs a p 2 0 0		40 0 0	40 0 0	40 0 0	60 0 0	60 0 0	60 0 0
																			per hide											
Chitaldrug	0	2	0	2	0	2	2	0	2	0	2	0	3	0	3	0	3	0	3	0	3	0	3	0	From 20 to 80 Rs.	From 20 to 80 Rs.	From 20 to 80 Rs.	From 80 to 120 Rs.	From 80 to 120 Rs.	From 80 to 120 Rs.

By Order,
B. K. VENKATA VARADA IYENGAR,
Secy. to Govt., Gen. & Rev. Dept.

Prices-Current (*Retail*) of Food Grains and Salt in the Mysore State during the fortnight ending the 15th April 1906.

Fortnight ending.	No.	District.	Quantity per rupee in seer of 80 tolas, *vide* Government of India No. 1—21, dated 10th February 1874.																																					
			Wheat.						Barley.						Rice, best sort.						Rice, common.						Javar or cholam (*Sorghum valgare*).						Bajra or kambu (*Pennisetum typhoideum.*)						Marua or ragi (*Eleusine Corocana.*)					
			Present return.		Next preceding return.		Corresponding return of last year.		Present return.		Next preceding return.		Corresponding return of last year.		Present return.		Next preceding return.		Corresponding return of last year.		Present return.		Next preceding return.		Corresponding return of last year.		Present return.		Next preceding return.		Corresponding return of last year.		Present return.		Next preceding return.		Corresponding return of last year.		Present return.		Next preceding return.		Corresponding return of last year.	
	1	2	3		4		5		6		7		8		9		10		11		12		13		14		15		16		17		18		19		20		21		22		23	
			S.	c.	S.	c.	S.	c.	S.	c.	S	c.	S.	c.	S.	c.	S.	c.	S.	c.	S.	c.	S.	c.	S.	c.	S.	c.	S.	c.	S.	c.	S	c.	S	c.	S.	c.	S.	c.	S.	c.	S.	c.
15th April 1906.	1	Bangalore.	10	9	10	0	12	5	*	*	*	*	*	*	7	12	7	3	8	10	8	10	8	5	10	6	*	*	*	*	*	*	*	*	*	*	*	*	18	8	17	0	18	0
	2	Kolar ...	8	0	8	0	10	0	8	0	8	0	10	0	7	0	7	0	8	0	7	8	7	8	9	0	*	*	*	*	*	*	*	*	*	*	*	*	15	0	15	0	20	0
	3	Tumkur ...	7	0	7	0	10	0	7	0	7	0	10	0	6	8	6	8	8	8	8	0	8	0	9	0	16	0	16	0	21	0	*	*	*	*	*	*	18	0	18	0	20	0
	4	Mysore ...	6	4	6	4	11	5	*	*	*	*	*	*	7	0	7	0	9	0	8	4	8	4	10	11	13	0	13	0	22	8	*	*	*	*	*	*	15	0	15	0	18	0
	5	Hassan ...	8	0	10	0	10	0	8	0	10	0	10	0	7	8	7	8	9	0	8	0	8	0	10	0	*	*	*	*	*	*	*	*	*	*	*	*	16	0	16	0	18	3
	6	Shimoga...	7	6	7	6	11	9	*	*	*	*	*	*	7	6	7	6	8	6	8	6	8	6	11	9	14	11	14	11	25	3	*	*	*	*	*	*	16	13	16	13	25	3
	7	Kadur ...	8	0	8	0	10	0	11	0	11	0	11	0	7	0	7	0	8	0	8	0	8	0	10	0	17	0	17	0	23	0	*	*	*	*	*	*	16	0	16	0	20	0
	8	Chitaldrug	8	0	8	0	12	0	8	0	8	0	12	0	7	0	7	0	9	0	8	0	8	0	10	0	13	0	16	0	24	0	16	0	16	0	24	0	15	0	16	0	24	0
		Average ..	7	14	8	1	10	14	8	6	8	13	10	10	7	2	7	1	8	7	8	1	8	1	10	1	14	12	15	5	21	2	16	0	16	0	24	0	16	5	16	4	20	7

* Article not available.

Prices-Current (*Retail*) of Food Grains and Salt in the Mysore State during the fortnight ending the 15th April 1906—*concluded*.

Quantity per rupee in seer of 80 tolas, *vide* Government of India No. 1—21, dated 10th February 1874.

Fortnight ending.	No.	District	Kangni or kakum Italian millet (*Setaria Italica.*)						Gram, chonna, chola, kadale or sunage (*Circor Arietinum.*)						Indian-corn or maize (*Zea Mays.*)						Arhar or Thur-cadjan pea (*Cajanus Indicus.*)						Arhar Dal.						Salt.						Remarks
			Present return.		Next preceding return.		Corresponding return of last year.		Present return.		Next preceding return.		Corresponding return of last year.		Present return.		Next preceding return.		Corresponding return of last year.		Present return.		Next preceding return.		Corresponding return of last year.		Present return.		Next preceding return.		Corresponding return of last year.		Present return.		Next preceding return.		Corresponding return of last year.		
			24		25		26		27		28		29		30		31		32		33		34		35		36		37		38		39		40		41		42
			S.	c.	S.	c.	S.	c.	S.	c.	S.	c.	S.	c.	S.	c.	S.	c.	S.	c.	S.	c.	S.	c.	S.	c.	S.	c.	S.	c.	S.	c.	S.	c.	S.	c.	S.	c.	
15th April 1906.	1	Bangalore	*	*	*	*	*	*	8	6	9	7	12	1	3 maizes for 4 pies.		3 maizes for 4 pies.		3 maizes for 4 pies.		15	12	16	5	12	15	8	8	8	8	8	8	14	15	14	15	11	8	
	2	Kolar ...	*	*	*	*	*	*	9	0	9	0	10	0	*	*	*	*	*	*	*	*	*	*	*	*	9	0	9	0	8	0	15	0	15	0	12	0	
	3	Tumkur .	*	*	*	*	*	*	9	0	9	0	10	0	*	*	*	*	*	*	12	0	12	0	13	8	8	0	8	0	8	0	13	0	13	0	12	0	
	4	Mysore ...	*	*	*	*	*	*	9	0	9	0	12	1	*	*	*	*	*	*	13	0	13	0	13	2	10	8	10	8	7	5	13	0	13	0	13	10	
	5	Hassan ..	*	*	*	*	*	*	8	0	8	0	10	0	*	*	*	*	*	*	11	0	12	0	12	0	8	0	8	0	9	0	12	0	12	0	12	0	
	6	Shimoga ..	*	*	*	*	*	*	7	6	8	6	12	1	*	*	*	*	*	*	12	10	11	9	14	11	8	6	8	6	8	6	16	13	16	13	12	10	
	7	Kadur ...	*	*	*	*	*	*	8	0	8	0	12	0	*	*	*	*	*	*	12	0	12	0	12	0	9	0	9	0	9	0	14	0	14	0	12	0	
	8	Chitaldrug	20	0	20	0	30	0	8	0	8	0	12	0	*	*	*	*	*	*	14	0	14	0	14	0	8	0	8	0	9	0	10	0	10	0	10	0	
		e age ..	20	0	20	0	30	0	8	5	8	10	11	4	3 maizes for 4 pies.		3 maizes for 4 pies.		3 maizes for 4 pies.		12	15	13	0	13	3	8	11	8	11	8	6	13	9	13	9	11	15	

* Article not available.

GOVT. OF H. H. THE MAHARAJA OF MYSORE, GENL. AND REV. SECRETARIAT,
Dated Bangalore, the 24th April 1906.

By Order,
B. K. VENKATA VARADA IYENGAR,
Secy. to Govt., Gen. & Rev. Dept.

The Mysore Gazette.

Vol. 41.] PUBLISHED BY AUTHORITY. [No. 19.

BANGALORE, THURSDAY, MAY 10, 1906.

☞ Separate paging is given to the Parts in order that they may be filed as distinct compilations.

CONTENTS.

PART I.—Notifications by the Government of His Highness the Maharaja of Mysore.

PART II.—Notifications by the Government of India; The Hon'ble the Resident in Mysore; Chief Judge; Survey and Inam Superintendent; Comptroller; Chief Engineer; Mysore State Railway; Amrut Mahal Department; Inspector-General of Registration; Senior Surgeon; District and Sessions Judges; Sub-Judges; Deputy Commissioners of Districts; Forest Officers; Presidents, Bangalore and Mysore City Municipalities; Season Reports; Mortuary and Meteorological Statements; Postal Notices; Civil and Military Station Notifications, &c.

PART III.—Legislative Measures and Rules thereunder.

PART IV.—Official Papers.

PART I.

Notifications by the Government of His Highness the Maharaja of Mysore.

GENERAL AND REVENUE.

No. 11315—*Ml.* (509-05)-5, *dated 2nd May* 1906.

Under Section 6 of the Land Acquisition Regulation, VII of 1894, it is hereby declared that the undermentioned land in Bowringpet is required for a public purpose, *viz.*, for improving the bazaar road in the Bowringpet Municipality, and under Section 3 (c) of the said Regulation; the Assistant Commissioner of the Bowringpet group of taluks is authorized to take order for the acquisition thereof:—

District—Kolar.
Taluk—Bowringpet.
Municipality—Bowringpet.
Name of khatedar—Satani Sampangiah.
Extent required in feet—East to west 8 ft.
North to south 42½ ft.

Boundaries—
East—Bazaar road.
West—Sampangiah's remaining portion of the house.
North—Conservancy lane.
South—Raja Narappa Chetty's vacant site.

No. 11318—*Ml.* (276-05)-12, *dated 2nd May* 1906.

Under Section 6 of the Mysore Land Acquisition Regulation, VII of 1894, it is hereby declared that the undermentioned land in Harihar is required for a public purpose, *viz.*, for improving the sanitation of the Harihar Municipality and for diverting a big box drain running into the river at Harihar:—

No.—1.
Name of owner—Pamenahalli Narasimhachar.
Description of lands or buildings—Vacant land.
Roof building as per Census—
Extent to be acquired—
Length—22.
Breadth—6.
Square yards—132.

Boundaries—
East—Rama Rao's vacant land.
West—Balaji Rao's house and a portion of his own land.
North—Road.
South—Halappa's land.

No. G. 5420—*G. M.* 113-05-3, *dated 3rd May* 1906.

The Government of His Highness the Maharaja are pleased to prescribe the following Rules for regulating the Grant of Scholarships for Scientific Research and Technical Education from the Damodar Dass Charities Fund :—

RULES.

I. With a view to encourage and promote Scientific Research and Technical Education among the people of Mysore, His Highness the Maharaja of Mysore has been pleased to sanction the following scholarships which shall be paid from four-fifths of the annual proceeds of the Damodar Dass Charities Funds.

II. The scholarships will be known as the Mysore Government Damodar Dass Scientific Research and Technical Education Scholarships.

III. There will be ordinarily two scholarships assigned annually, and each will be tenable for two years, or such other period as may be fixed by the Mysore Government with reference to the subject of research or of education selected; and the holder of the scholarship shall study in such University or College or Institution in England or elsewhere as shall be decided from time to time by the Mysore Government.

IV. A candidate for one of the scholarships must not be over twenty-two years of age, must have graduated from a College in the Mysore State and must be a native of Mysore by birth or domicile; provided that in default of born or domiciled Mysore students being available, others who have graduated from a College in Mysore may be chosen.

V. Candidates must have passed with credit a degree in Arts, Medicine or Engineering in an Indian University.

VI. Each candidate must forward with his application—

i. A satisfactory certificate of birth or domicile.

ii. A declaration that he has the consent of the head of his family to proceed to England, or elsewhere, for the purpose of this scholarship.

iii. Certificates of good character from two persons (not relations of the candidate) of respectability and good possession, in addition to the one from the Head of the College where he was educated for the degree in Arts, Medicine or Engineering.

iv. A certificate of physical fitness to undergo the course of study or research which he will have to follow in England or elsewhere, signed by the Senior Surgeon of the Government of Mysore, or a Medical Officer not below the rank of a District Civil Surgeon.

v. A statement of the course of study or research which he desires to pursue, with testimonials as to his educational qualifications for such course.

VII. Applications shall be addressed to the Secretary to the Government of Mysore in the General and Revenue Department, and the selection of candidates will be made by the Government after the receipt of a report from a Committee appointed by the Government to report on the merits of the candidates.

VIII. Each candidate selected will be given travelling allowance, 2nd class rail and steamer fares, to England or elsewhere from Bangalore, and a similar allowance for travelling expenses back to Bangalore on the completion of his course of study or research. He will further be allowed during his stay in England or elsewhere outside India, a sum of £200 per annum, payable quarterly in advance, this allowance to be inclusive of College and examination fees, cost of books, instruments and boarding charges. If the Institution selected by Government for the prosecution by the candidate of his study or research is in India or Japan, the allowance will be Rs. 100 per mensem.

IX. The subjects which the scholarship-holder shall study will be one or more of the following :—

(1) Chemistry.

(2) Physics.

(3) Applications of Chemistry or Physics to agriculture and to the various Arts and Industries likely to be of greatest benefit to the Mysore Country—such as dyeing, the extraction, purification and testing of sandal and other indigenous oils; soap

and candle-making; glass-making; paper-making; match-making; photo; mechanical printing, sugar-refining; tanning; textile industries.

(4) Medical research specially in hygiene and bacteriology.

(5) Mechanical Engineering.

(6) Mining and Metallurgy, including electro-metallurgy.

X. Each candidate selected, unless otherwise directed by Government, shall, within such period as may be fixed by Government, proceed to England or elsewhere, and on arrival there present himself before Messrs. Coutts & Co., Strand, London, or any other person or persons named by Government, who will pay him the amount of the scholarship for the first quarter. He shall then without unnecessary delay proceed to and join the Institution selected or approved by Government for the purpose and there continue his study or research with all due diligence.

XI. The continuance of the scholarship to the holder will be strictly dependent on good conduct and will be conditional on satisfactory progress being made in his study or research as certified in a half-yearly report to be sent to Government by the Head of the Institution he attends. The stipend of the scholarship for each subsequent quarter will be paid only on a bill countersigned by the Head of the Institution and a certificate that the student is in regular attendance at the Institution and that his conduct and progress are satisfactory.

XII. The scholarship will be forfeited if the holder thereof—not being disabled by illness or prevented by any other cause which the Government may consider sufficient—fail to complete the course of study or research prescribed or is unfavourably reported on by the Head of the Institution. No return passage will in such case be paid.

XIII. A candidate selected shall, before proceeding to England or elsewhere, enter into a bond with the Mysore Government stipulating that he accepts the scholarship on the conditions specified in these rules, that he will prosecute the study or research with all due diligence; and that on completion of such study or research course he shall return to Mysore and shall, if called upon to do so, serve the Mysore Government for a period of not less than five years. If he fails to fulfil any of these conditions, he shall return to the Government the total amount received by him for passage money and scholarship.

XIV. The date within which applications shall be submitted and the subject or subjects of study and research selected annually by Government shall be notified in the Mysore Government Gazette not less than six months previously.

No. R. 14153—*L. S.* 68-05-3, *dated 4th May* 1906.

Under Section 236 of the Mysore Land Revenue Code, the Government of His Highness the Maharaja of Mysore are pleased to authorize the extension of the provisions of Chapters VIII to X of the abovesaid Code to the Jodi village of Kantankunte in the Dodballapur Taluk, belonging to the Sri Vyasarayaswami Matt.

No. 11433—*Ml.* (230-05)-4, *dated* 5—*7th May* 1906.

It is hereby notified for the information of the public that Notification No. 4185—Ml. 230-05-3, dated the 24th October 1905, published at page 684 of the *Mysore Gazette* of the 26th October 1905, declaring that certain lands in the village of Jaksandra in the Bangalore Taluk would be required for the construction of a septic tank for the drainage of the Malleswaram extension of the Bangalore City, is hereby cancelled, as the lands therein referred to are not required for any public purpose.

No. 11431—*L. B.* (202-05)-7, *dated 3rd—7th May* 1906.

The nomination made by the Mining Board of Dr. John D. O'Donnell, Acting Chief Medical Officer of that Board, as a non-official member of the Sanitary Board of the Kolar Gold Fields, *vice* Dr. T. J. O'Donnell, Chief Medical Officer of the Mining Board, who has gone to England on leave, is approved.

No. 11535—*Ml.* (411-05)4, *dated* 8—*9th May* 1906.

Messrs. Venkatanaranaiya, shanbhog, Gattigowdan Siddegowda and Seshachela Jois, land-holders, are appointed members of the Bannur Municipal Board, *vice* Messrs. Srinivasaiya, Siddegowda and Seshasetti, deceased.

No. G. 5429, *dated 7th May* 1906.

The following list of Papers placed at the disposal of the Press is published for general information :—

No.	No. and date of Proceedings	Subject
1	R. 12651-90—L. R. 252-05-4, 30th March 1906.	Directing certain procedure to be adopted when Government Officers have to deal with collection of public subscriptions and their expenditure.
2	No. 9045-55—San. 189-05-3, 3—5th March 1906.	Orders that copies of the Government of India Resolution dated 17th January 1906, *re* the adoption of measures for the suppression of plague, be forwarded to the Senior Surgeon and Sanitary Commissioner, the Deputy Commissioners of Districts and the Presidents of the City Municipalities of Bangalore and Mysore for information and guidance, and requests the Senior Surgeon to state what change he would propose to make in the preventive measures now in force in the State.
3	No. 9511-50—L. R. (305-05)-2, 16th Mar 1906.	Sanctions the levy of tolls on the Arsikere-Hassan road.
4	No. 9164-206—San. (184-05)-2, 8th March 1906.	Sanctions the recommendation of the Senior Surgeon in the matter of the free supply of shed materials to Government officials and menials drawing a pay of Rs. 10 and less.
5	Fl. 6206-7—Edn. (165-05)-3, 21st Mar. 1906.	Sanctioning additional establishment for certain Taluk Anglo-Vernacular and Vernacular Schools and also increase of pay to teachers and servants of such schools.
6	No. 3779-92½—Muz. F. 3 of 02, 9th Mar. 1906.	Recognizing the succession of Veda Murti Jayachar as Swami of the Sri Uttaradi Matt at Hole-Narsipur, and passing orders on the claims of shanbhog Srinivasa Murtiachar and other decree-holders against the Matt.
7	No. 3797-800½—Muz. F. 36 of 96, 12th March 1906.	Sanctioning the grant of a tasdik of Rs. 20 per mensem to the Sri Venugopala Krishnaswamy temple newly built in the Malleswaram Extension, Bangalore City.
8	No. 3949-56½—Muz. F. 28 of 93, 17th March 1906.	Passing orders on the transfer of chattrams in the State.
9	No. 3957-64½—Muz. F. 23 of 93, 17th March 1906.	Directing the revival of feeding in all the Muzrai Annachattrams of the State.
10	No. 4110-12—Muz. F. 22nd March 1906.	Fixing a scale of expenditure in connection with the branch Uttaradi Matt at Mysore and the Brindavanams situated therein.
11	No. 4122-31—Muz. F. 39 of 95, 23rd March 1906.	Passing orders in regard to the disbursement of interest accruing on the deposit of Rs. 6,000 made by Vankayalu Doddaranganna and Nagartha Chikkanna of Chikballapur for the feeding of travellers in the Chikballapur chattram, and directing the general applicability of the order to all such charitable institutions as enjoy the benefit of the favourable rate of interest under the rules of 1892.
12	No. 4168-70—Muz. F., 26th March 1906.	Sanctioning the registry of a malnad cash grant of Rs. 7-9-0 per annum in the name of Virabhadra Devaru at Koppa from that of Jangam Matt at Etigana Makki in the Koppa Taluk.
13	No. 4004-7—Muz. F., 17th March 1906.	Passing orders regarding the transfer of the Jodi village of Kempalingapura in the Devanhalli Taluk to the Hunsamaranahalli Matt in the said taluk.
14	No. 4302-4—Muz. F. 15-96, 28th Mar. 1906.	Passing orders regarding the increase of monthly allowance to the Swamigalu of Sri Yogananda Matt of Hole-Narsipur and the management of the Sri Chaturbhuja Pattabhi Ramaswami and Sri Nilakanteswaraswami temples at the place.

No. 11553—*L. B.* (12-05)-11, *dated* 8—*9th May* 1906.

For (1) Mr. Sillabarappa, Patel, Attibele and (2) Mr. Khaji Syed Kudbudeen, Mayasandra, appointed as additional members of the Anekal Taluk Board, in Notification No. 9895—L. B. (12-05)-9, dated the 26th March 1906, read (1) Mr. Sidlabasappa, merchant, Attibele, and (2) Mr. Khaji Syed Khudbudeen, Dommasandra.

No. R. 13584—*L. R.* 612-05-3, *dated* 20*th*—21*st April* 1906.

Under Section 6 of the Land Acquisition Regulation, No. VII of 1894, it is hereby declared that the land described hereunder is required for a public purpose, *viz.*, for opening a cart-track; and under Sections 7 and 3 (*c*) of the said Regulation, the Assistant Commissioner in charge of Honnali group of taluks is authorized to take order for the acquisition of the said land :—

District—Shimoga.
Taluk—Channagiri.
Village—Pandavamatti.
Name of khatedar—Karibasaiya and Marala Siddaiya.
Survey No.—106—1.
Total extent—11 acres and 35 guntas.
Assessment—Rs. 13.
Extent now required—275 yds. length and 5 yds. breadth.

Boundaries—
East—Portion of S. No. 107 and a path leading from Pandavamatti to Rajagondanahalli.
West—S. Nos. 101 and 102.
North—Path leading from Pandavamatti to Rajagondanahalli.
South—Portions of S. Nos. 100 and 107.

No. R. 13987—*L. R.* 434-05-6, *dated* 27—28*th April* 1906.

In supersession of Notification No. R. 9887—L. R. 434-05-3, dated the 23rd January 1906, published on page 64 of Part I of the *Mysore Gazette*, dated the 1st February 1906, and under Section 6 of the Land Acquisition Regulation, No. VII of 1894, it is hereby declared that the land hereunder mentioned is required for a public purpose, *viz.*, for improving the Honnali-Basavapatna road; and under Sections 7 and 3 (*c*) of the aforesaid Regulation, the Assistant Commissioner in charge of the Honnali group of taluks is authorized to take order for the acquisition of the said land :—

District—Shimoga.
Taluk—Channagiri.
Hobli—Basavapatna.
Village—Sringarabag.
Name of Khatedar—Siddalinga, son of Bharamajja.
Survey No.—61, Part 3.
Particulars—Dry.
Total extent—39 guntas.
Assessment—Re. 0-14-0.
Extent required—39 guntas.

Boundadries—
East—Land belonging to Ranga.
West—Old road leading to Honnali.
North—Village site.
South—Lane connecting the road leading from Hosakere to Honnali.

No. 11335—*Med.* (247-05)-2, *dated* 2*nd*—4*th May* 1906.

Under clause (1) of Section 2 of Regulation No. I of 1906, it is hereby declared that vaccination shall, from and after the date of this notification and for a period of six months, be compulsory in the local area within the control of the Sanitary Board of the Kolar Gold Fields.

2. The Sanitary Board is hereby empowered to make bye-laws with the approval of Government for carrying out the purposes of the Regulation.

No. R. 14387—*L. R.* 652-05-3, *dated* 9*th May* 1906.

Under Section 6 of the Land Acquisition Regulation, No. VII of 1894, it is hereby declared that the land described hereunder is required for a public purpose, *viz.*, for the construction of a Forest lodge; and under Sections 7 and 3 (*c*) of the said Regulation, the Assistant Commissioner in charge of Honnali group of taluks is authorised to take order for the acquisition of the said land :—

District	Taluk	Village	Name of khatedar	Survey No.	Dry, wet or garden	Total extent	Assessment	Extent now required	Boundaries			
									East	West	North	South
						A. g.	Rs. a. p.	A. g.				
Shimoga	Shikarpur	Kallamane	Siddanna, son of Sivanna	173	Dry ...	2 24	4 8 0	2 24	Survey No. 1 and the village site	Survey No. 172	Survey Nos. 3 & 4	Survey No. 174 and the village site
					Wet ...	1 33						
					Total extent.	4 17						

No. R. 14133—*L. R.* 635-05-3, *dated 3rd May* 1906.

Under Section 6 of the Land Acquisition Regulation, No. VII of 1894, it is hereby declared that the land described hereunder is required for a public purpose, *viz.*, for inclusion in the bed of the Kurodi tank; and under Sections 7 and 3 (*c*) of the said Regulation, the Assistant Commissioner in charge of the Chikballapur group of taluks is authorised to take order for the acquisition of the said land.

District	Taluk	Hobli	Village	Name of khatedar	Survey No.	Total	Assessment	Extent now required	Boundaries			
									East	West	North	South
						A. g.	Rs. a. p.	A. g.				
				Appaiyachari	67	1 8	6 0 0	0 24	Survey No. 66 ..	Survey No. 77 ...	Survey Nos. 71-68 ...	Survey No. 78
				Do	70	1 10	6 0 0	1 10	Do 69 ...	Do 71 ...	Tank ...	Do 71
				Chikkathimma	67	1 8	5 12 0	0 24	Do 66 ...	Do 77 ...	Survey No. 71-68 ...	Do 78
				Do	76	0 37	2 4 0	0 37	Do 77 ...	Tank ...	Do 73 and 74 ...	Do 79
				Venkata *alia* Mutha	68	1 3	5 0 0	1 3	Do 66 ...	Survey No. 71 ...	Do 69 ...	Do 67
Kolar	Goribidnur	Hosur	Kurodi	Vyasa Rao	69	0 26	3 8 0	0 26	Tank ...	Do 70 ...	Tank ...	Do 68
				Doddamallappa	71	1 31	9 0 0	1 31	Survey No. 68 ...	Do 72 ...	Survey No. 70 ...	Do 67
				Narasimhiah	72	0 17	2 0 0	0 17	Do 71 ..	Do 73 ...	Tank ...	Do 74
				Do	75	0 39	5 0 0	0 39	Do 67 ...	Do 74 ...	Survey No. 71 ...	Do 77
				Hutcha	71	0 4	0 8 0	0 4	Do 68 ...	Do 72 ...	Do 70 ...	Do Nos. 67 and 75
				Venkata	74	0 22	2 0 0	0 22	Do 75 ...	Do 73 ...	Do 72 ...	Do No. 76
				V. Nanja	77	0 24	2 8 0	0 24	Do 67 ...	Do 76 ...	Do 75 ...	Do 78
				Total ...	...	10 29	49 8 0	9 21				

2135

CIVIL APPOINTMENTS.

Heads of Departments and all other officers concerned are informed that Notifications in the Gazette are in future to be accepted as disposing of all references regarding leave, transfers, appointments, powers and other personal questions affecting Gazetted officers, as to which orders are gazetted by the Government in this Part of the Gazette, and that any subsidiary orders as to relief of their subordinates and the like, which such notifications necessitate, must be issued by them on receipt of the Gazette, as no other orders will be issued by Government.

No. 11385—*Ed.* (266-05)-2, *dated* 30*th April*—4*th May* 1906.

Under Article 188 of the Mysore Service Regulations, Mr. T. R. Venkataswami Naidu, B.A., Assistant to the Inspector-General of Education, who has been appointed Professor of Mathematics in the Maharaja's College at Mysore, is granted privilege leave of absence for three months, with effect from the 27th March 1906.

No. Fl. 7604—*Gen. Fin.* 309-05-2, *dated* 9*th May* 1906.

Mr. B. Gopaliengar, Officer in charge of the State Huzur Treasury, is granted half a month's privilege leave from the 3rd May 1906.

No. R. 14398—*L. R.* 284-05-4, *dated* 9*th May* 1906.

Under Article 188 of the Mysore Service Regulations, Mr. B. Bhima Rao, B.A., Probationary Extra Assistant Commissioner, in charge of the Chitaldrug District Treasury, was granted privilege leave of absence from the forenoon of the 1st November 1905 to the afternoon of the 22nd idem.

No. J. 3107—*Cts.* 286-3, *dated* 5*th May* 1906.

Under Section 10, Sub-Section (I), of the Criminal Procedure Code, Mr. C. Srikanteswara Aiyar, B.A., B.L., Officiating Deputy Commissioner, *sub pro tem*, of the Kolar District, is appointed a District Magistrate.

No. 11386—*Ed.* (267-05)-2, *dated* 4—7*th May* 1906.

The following appointments and transfers of Deputy Inspectors of Schools have been ordered :—

1. Mr. M. Ramaswamaiya, Deputy Inspector of Schools, Tumkur District, to be Deputy Inspector of Schools, Mysore District.

2. Mr. S. Rangacharlu, Deputy Inspector of Schools, is transferred from the Kolar to the Tumkur District.

3. Mr. S. Gopal Rao, Deputy Inspector of Schools, is transferred from the Mysore District, North Circle, to the Kolar District.

4. Mr. M. K. Tirumalachar, Deputy Inspector of Schools, Hassan and Kadur Districts, to be Deputy Inspector of Schools of the Hassan District, and

5. Mr. H. N. Venkataramanaiya, Manager of the Local Examination Office, to be Deputy Inspector of the Kadur District.

No. 11390—*Med.* (55--05)-12, *dated* 4—7*th May* 1906.

In modification of para 2 of Notification No. 11140, dated the 27th April 1906, Mr. T. S. Nanjappa, Civil Surgeon and Personal Assistant to the Senior Surgeon, is appointed to act as the District Medical and Sanitary Officer of the Mysore District and Superintendent of the Mysore Jail, during Mr. P. S. Achyuta Rao's absence on leave or until further orders.

2. Mr. P. Palpu, Personal Assistant to the Sanitary Commissioner, will, in addition to his own duties, be the Personal Assistant to the Senior Surgeon during Mr. T. S. Nanjappa's absence on other duty or until further orders.

No. R. 14241—*L. R.* 604-05-8, *dated* 8*th May* 1906.

In modification of Notification No. R. 13892—L. R. 604-05-4 of the 25th April 1906, Mr. Parthasarathi Iyengar, Amildar, is posted to the Channapatna Taluk, which he should join forthwith.

Mr. T. Ramachendra Rao, Acting Amildar of Channapatna, will revert as the District Treasurer of Shimoga.

No. R. 14400—*L. R.* 47-05-18, *dated* 9*th May* 1906.

In modification of the arrangement sanctioned in Notification No. R. 13579—L. R. 47-05-15, dated the 20th April 1906, N. Ramaswamiengar, District Sheristadar of Hassan, was deputed to act as Amildar of Arkalgud.

No. R. 14399—*L. R.* 21-05-1[illegible]2, *dated 9th May* 1906.

Mr. C. Rama Rao handed over and Mr. C. S. ikanteswara Iyer, Officiating Deputy Commissioner, received charge of the Kolar District and Treasury, on the forenoon of the 30th April 1906.

The Petition Box kept at the Office of the General and Revenue Secretariat, Bangalore, will be cleared at 12 noon every day by the Secretary to Government, General and Revenue Department, and in his absence from Bangalore, by the Deputy Secretary.

By Order,
B. K. VENKATA VARADA IYENGAR,
Secy. to Govt., Gen. & Rev. Dept.

PUBLIC WORKS.

No. 447—3008, *dated 8th May* 1906.

The following extract from the *Gazette of India*, dated 28th April 1906, is republished for information :—

RAILWAY BOARD NOTIFICATIONS, SIMLA THE 26TH APRIL 1906.

No. 98.—The following promotions and reversions to and in the classes of Chief and Superintending Engineers attached to State Railways are ordered, with effect from the dates specified :—

Name	From	To	With effect from
*	*	*	*
McHutchin W.	Chief Engineer, Class II, Temporary, supernumerary	Superintending Engineer, Class I, supernumerary.	6th February.
*	*	*	*

(Sd.) C. A. R. BROWNE, LT.-COL., *R.E.*,
Secretary, Railway Board.

No. 450—3038, *dated 9th May* 1906.

Consequent on the revision of the scale, the following promotions are ordered in the Engineer Establishment of the Mysore Public Works Department (Local), with effect from 1st October 1905 :—

No.	Name	Present class	Class to which promoted	Nature of promotion
1	Mr. V. Rangasawmy Iyengar, B.C.E.	Executive Engineer, 4th class, permanent, and 3rd class, temporary rank.	Executive Engineer, 3rd class.	*Sub pro tem.*
2	Mr. H. J. Molloy ...	Executive Engineer, 4th class, permanent.	Executive Engineer, 3rd class.	Temporary.

By Order,
W. MCHUTCHIN,
Secy. to Govt., P. W. Dept.

MILITARY.

No. 3750-1, *dated 9th May* 1906.

Under Article 175 of the Mysore Service Regulations, Lt.-Col. R. G. Jones, I.A., Military Assistant to the Government of Mysore, was granted four days' casual leave from the 22nd April 1906.

By Order,
R. G. JONES, *Lt.-Col.*,
Military Assistant.

438

The Mysore Gazette.

Vol. 41.] PUBLISHED BY AUTHORITY. [No. 19.

BANGALORE, THURSDAY, MAY 10, 1906.

PART II.

Notifications by Govt. of India, Resident, Chief Court, &c.

JUDICIAL DEPARTMENT.

IN THE CHIEF COURT OF MYSORE.

CIVIL SIDE.

Addendum dated 1st May 1906 to Rule of Practice No. 127, dated 30th October 1905.

The Chief Court directs that the following be inserted after para 5 of the said Rule of Practice and that the present para 6 be numbered 10.

6. The Judge of every Civil Court shall, on the close of every month, make a special examination of the Register No. X (Cash Book), checking the entries of receipts with Register No. VIII and by occasional reference to the records of the cases themselves, and checking the entries under the head of disbursements with the entries in Register No. XI (Deposit Register), No. XII (Ledger Book), No. XIII (Register of stamp duties and penalties,) and with the acknowledgments of the Treasury Officer entered in the Remittance Book, or in Register No. X.

7. He shall also call upon the Nazir at the same time to produce the sum shown by Register No. X. to be in his hands, and shall make a note in the Register whether it has been found correct after reference to the detailed statement of the balance according to cases or parties, and whether the sum in hand has been correctly produced.

8. Every six months, the Judge of every Civil Court shall compare the same Register with the Treasury monthly receipts, and shall report to the Chief Court whether the results shown in the Registers X (Cash Book), XI (Deposit Register) and XIII (Register of stamp duties and penalties) correspond with the Treasury monthly receipts, and whether the amount in the Nazir's hand corresponds with Register No. X, and has been produced by the Nazir.

The report shall be forwarded on the 8th January and the 8th July every year, and shall be accompanied by a statement in the following form :—

| 1 | | |

FOREST DEPARTMENT.

Notification dated 20th April 1906.

It is hereby notified for general information that the following quantities of timber will be sold by public auction in the Depots of the Kadur District on the dates specified against each Depot, by the District Forest Officer of the Kadur District :—

No.	Name of Depot	Date of sale	Description	Cubical contents No.	Cubical contents Cubic feet	Remarks
1	Kadur ...	23rd May 1906 ...	Matti logs	15	300	
			Teak poles	500	1,500	
			Honne rafters	600	1,500	
2	Tarikere ..	25th May 1906 ...	Teak logs	250	5,000	
			Teak poles	200	500	
			Matti logs	10	200	
			Nandi logs	72	1,900	
			Yettega logs	72	1,300	
			Teak sawn rafters and planks	4,000	4,200	
			Bite logs	58	1,230	
			Teak reepers	1,065	8,480 Rft.	
			Neralu	10	225	
			Matti rafters big and small	300	450	More or less.
3	Benkipur ...	28th May 1906 ..	Teak logs	200	4,000	
			Matti logs	100	200	
			Nandi logs	10	200	
			Yettega logs	26	1,026	
			Hunnal logs	29	780	
4	Shimoga ...	30th May 1906 ...	Nandi logs	10	200	
			Bite logs	8	220	
			Yettega logs	20	619	
			Hunnal logs	67	1,800	

N. B.—Terms of Sale.—Notification No. R. 15229—R. F. 155-92, dated the 15th March 1895, published in the *Mysore Gazette* No. 15, dated the 25th April 1895.

B. HEERASINGH,
Dt. Forest Officer, Kadur Dt.

It is hereby notified for general information that the following quantities more or less of Minor Forest Produce, will be sold by public auction in several places of the Mysore District, on the dates specified against each :—

No.	Place	Date of sale	Designation of the officer conducting the sale	Minor Forest products: 1st class Lac		Gall-nuts		Honey		Wax		Tamarind
				Mds.	lb.	Mds.	lb.	Mds.	lb.	Mds.	lb.	Mds.
1	Seringapatam Koti ...	25th May 1906	District Forest Officer, Mysore	110	7	1,045	21	6	3	0	22	...
2	Gundlupet ...	26th May 1906	Forest Range Officer ...	...		350	0	..		...		30
3	Chamrajnagar ..	28th May 1906	Do ...	...		500	0	...		...		...

TERMS OF SALE.—*Vide* Inspector-General's Notification dated 11th June 1887, published at pages 287—288 of the *Mysore Gazette*, dated 18th June 1887.

Notification dated 29th April 1906.

It is hereby notified for general information that the following quantities of timber will be sold by public auction in the depots of the Mysore District on the dates specified against each depot, by the District Forest Officer of the Mysore District.

No.	Name of depot	Date of sale	Description	Cubical contents No.	Cubical contents C. feet	Remarks
1	Mysore wood-yard ...	19th May 1906 ...	Matti logs	100	2,500	More or less
			Teak logs	350	12,000	
			Do pieces	100	1,500	
			Honne logs	50	1,000	
2	Nanjangud depot ...	21st May 1906 ...	Teak logs	100	3,000	
			Do pieces	100	1,500	
			Honne logs	50	1,500	

N. B.—Terms of sale.—Notification No. R. 15229-*R. F.* 155-92, dated the 15th March 1895, published in the *Mysore Gazette* No. 15, dated the 25th April 1895.

M. G. RAMA RAO,
Dt. Forest Officer, Mysore Dt.

EDUCATION DEPARTMENT.

Notification D. No. 44, dated 27th April 1906.

The Committee for the management of the Government Hindustani Girls' School at Maddagiri is reconstituted as follows:—

President.

The Amildar of Maddagiri ... ... *Exofficio.*

Honorary Secretary.

Syed Mohadin Binturi, Kannada munshi, Hindustani Boys' School, Maddagiri.

Members.

1. The Head Master Hindustani Boys' School, Maddagiri ... ... *Exofficio.*
2. Lal Ahamad Sahib.
3. Mahomed Mallik Sahib.
4. Fackrudin Sahib.
5. Manju Lal Sahib.
6. Khaji Gulam Mohadin Sahib.

Notification D. No. 45, dated the 30th April 1906.

Mr. Madhuri Pillappa is appointed as member of the Committee for the management of the Government Kannada Girls' School at Sidlaghatta reconstituted by Notification D. No. 15, dated the 29th September 1904, in place of Mr. Muttur Nanjundappa, deceased.

H. J. BHABBA,
Inspector-General.

POLICE DEPARTMENT.

Notice dated Champion Reefs, 4th May 1906.

Notice is hereby given that a sum of Rs. 1-3-10, being the arrears of pay and travelling allowance due to certain-ex-Police constables as detailed below, lies unclaimed and that, if the claimants do not appear and receive the amount from the undersigned within one month from this date, the same will be credited to Government:—

Name and Division	Amount Rs.	a.	p.	Remarks
Ex. P. C. No. 176, Mannaji Rao of A Division	0	6	11	Arrears of pay for February 1906.
Do 200, Varadaraju do ...	0	6	11	Do do
Do 134, Abboy Naidu do ...	0	6	0	Arrears of travellnig allowance for July 1905.
Total ...	1	3	10	

By Order,
R. J. M. MAYNE,
Deputy Supt. of Police, Kolar Gold Fields.

A reward of Rs. 10 will be paid to any person or persons who will give information to the Assistant Superintendent of Police, Hassan District, leading to the arrest of the undermentioned accused who absconded after committing culpable homicide not amounting to murder under Section 304, Indian Penal Code, in Hosahalli village, Belur Taluk :—

(Crime No. 1—25 of 1905-06 of the Arkalgud Taluk, Hassan District.)

Name—Dyava.

Father's name—Hutchegowda.

Caste—Vakkaliga.

Height—About five feet.

Identification marks: —Complexion oily red; face oval and slightly pock-marked, body somewhat corpulent, moustache just growing; brows bear some scar marks; wore a pair of gold ear-rings, a black check coat with brown stripes and white dhoti with red lines.

A reward of Rs. 10 will be paid to any person or persons who will give information to the Assistant Superintendent of Police, Hassan District, leading to the arrest of the undermentioned accused who absconded soon after committing culpable homicide not amounting to murder under Section 304, Indian Penal Code, in Bandahalli village, Belur Taluk, on the night of 5th December 1905 :—

(Crime No. 3—54 of 1905-06 of the Belur Taluk, Hassan District.)

Name—Hiraga.

Age—About 35 years.

Caste—Holeya.

Occupation—Was serving as a groom in one Puttappa Setty's Coffee Estate near Bandahalli village, Belur Taluk.

Identification marks :—Complexion oily red, face elongated and slightly pock-marked.

GULAM MOHIDEEN KHAN,
Asst. Supt. of Police, Hassan Dist.

Descriptive list of one Thimmiah Gowda of Kurkalavani, a hamlet attached to Hebbe village in the Yedahalli Sub-Taluk, missing about the 10th of January 1906 :—

1. Name—Thimmiah Gowda.
2. Father's name —Puttiah Gowda.
3. Namathari—Vakkalu caste.
4. Occupation—Cultivation.
5. Age—27 years.

Height 5 feet 5 inches, bamboo color, thin man, has got a tuft of hair on the head. *Clothes, etc., worn by him.*—(1) White towel 6 cubits long and 2 cubits wide. (2) A vest made of black check cloth. (3) Black handkerchief. (4) Chota panche. (5) Two gold ear-rings in the right ear and one ear-ring in the left ear.

B. RAMASWAMAIYA, for *Dy. Comr., Kadur Dt.*

MISCELLANEOUS.

KOLAR DISTRICT.

Memorandum dated 28th April 1906.

Under Rule III of the Government Notification No. 11289—Ex. F. 3-1901, dated 7th January 1902, the Deputy Commissioner, Kolar District, hereby delegates the following powers to the Excise Assistant Commissioner, Kolar District, *viz* :—

(1) Power to permit import of liquor or intoxicating drug into Mysore under Section 6 of the excise Regulation.
(2) Power to permit export of liquor or intoxicating drug from Mysore under Section 7.
(3) Power to grant licenses for the exclusive privileges of manufacture, etc., under Section 16.
(4) Power to cancel or suspend licenses or permits under Section 26.

C. RAMA RAO,
Acting Deputy Comr.

Notification dated 2nd May 1906.

1. It is hereby notified for public information that the undermentioned Jodi village, which has been duly attached in satisfaction of the arrears of revenue due to Government (as shown in the subjoined statement) by the said Jodidars, will be sold by public auction at the place and on the date mentioned in the annexed statement. The sale will commence at 11 A.M., on the date specified, and the village will be knocked down to the highest bidder without reserve.

2. Provided that when a village is divided into separate recognized vrittis, the Deputy Commissioner may, at his option, instead of selling the village as a whole, sell each vritti separately.

3. The purchaser will be required to deposit twenty-five per cent of the purchase money at the time of sale, and where the remainder of the purchase money may not be paid within fifteen days from the day of sale, the money so deposited shall be liable to forfeiture.

4. When such deposit shall not be made nor the remaining purchase money paid up, the lands shall be re-sold at the expense and risk of the first purchaser.

5. Persons bidding at the sale may be required to state whether they bid on their own account or as agents, and in the latter case to deposit a written authority signed by their principals, otherwise their bids may be rejected.

6. The sale shall be stayed, if the defaulters or any other person acting on their behalf or claiming an interest in the land, tender the full amount of the arrears of revenue with the interest and other charges, before the property is knocked down or give satisfactory proof that the amount of arrears, etc., has been paid up or furnish security under Section 170 of the Mysore Land Revenue Code.

7. Purchaser having completed the payment of the purchase money will, as soon as the sale has been confirmed, be placed in immediate possession, and the village will be registered in the name of the purchaser, and a certificate of sale signed and sealed by the Deputy Commissioner will be granted to him. It is to be distinctly understood that the Government are not responsible for errors of description and in estimated extent.

8. Provided parties deeming themselves aggrieved by the sale shall be at liberty to appeal to the Government within ninety days from the day of sale and the purchase shall be conditional on the final order in such appeal.

District	Taluk	Hobli	Village	Names of Jodidars	Estimated extent	Estimated gross rental or kariz	Quit-rent payable annually to Government	Arrears of Government revenue for which village is to be sold	Date of sale, etc.
					K. k. p.	Rs. a. p.	Rs. a. p.	Rs. a. p.	
Kolar	Bowringpet	Budikote	Jodi Suriganahalli	Srinivasachar and Gopalachar Peramboke Dry and wet	11 3 4	85 0 0	33 0 0	95 15 11	Bowringpet Taluk Cutcherry. 21st June 1906.

Boundaries.

East—Garudakempanahalli, Balamande and Bupanhalli.

West—Kotaramgulla and Bupanhalli.

North—Bupanhalli.

South—Kadarenhalli.

NOTE.—The sale is free from all tenures, encumbrances and rights created by the Jodidars or any of their predecessors in title or in anywise subsisting against them.

444

Notification dated 2nd May 1906.

It is hereby notified for public information that the undermentioned Kayamgutta village which has been duly attached in satisfaction of the arrears of revenue due to Government (as shown in the subjoined statement) by the said Kayamguttadars, will be sold by public auction at the place and on the date mentioned in the annexed statement. The sale will commence at 11 A.M., on the date specified, and the village will be knocked down to the highest bidder without reserve.

2. Provided that when a village is divided into separate recognized vrittis, the Deputy Commissioner may, at his option, instead of selling the village as a whole, sell each vritti separately.

3. The purchaser will be required to deposit twenty-five per cent of the purchasemoney at the time of sale, and where the remainder of the purchase money may not be paid within fifteen days from the day of sale, the money so deposited shall be liable to forfeiture.

4. When such deposit shall not be made nor the remaining purchase money paid up, the lands shall be re-sold at the expense and risk of the first purchaser.

5. Persons bidding at the sale may be required to state whether they bid on their own account or as agents, and in the latter case to deposit a written authority signed by their principals, otherwise their bids may be rejected.

6. The sale shall be stayed, if the defaulters or any other person acting on their behalf or claiming an interest in the land, tender the full amount of the arrears of revenue with the interest and other charges, before the property is knocked down or give satisfactory proof that the amount of arrears, etc., has been paid up or furnish security under Section 170 of the Mysore Land Revenue Code.

7. Purchaser having completed the payment of the purchase money will, as soon as the sale has been confirmed, be placed in immediate possession, and the village will be registered in the name of the purchaser, and a certificate of sale signed and sealed by the Deputy Commissioner will be granted to him. It is to be distinctly understood that the Government are not responsible for errors of description and in estimated extent.

8. Provided parties deeming themselves aggrieved by the sale shall be at liberty to appeal to the Government within ninety days from the day of sale and the purchase shall be conditional on the final order in such appeal.

District	Taluk	Hobli	Village	Names of Kayamguttadars	Estimated extent			Estimated gross rental or beriz	Quit-rent payable annually to Government	Arrears of Government revenue for which village is to be sold	Date of sale, etc.
						A.	g.	Rs. a. p.	Rs. a. p.	Rs. a p.	
Kolar	Chikballapur	Mandikal	Kayamgutta Chiganahalli	1 Varadachar, 2 Srirangachar, 3 Seshachars	Peramboke	490	3	587 4 0	582 0 0	1,156 7 7	21st June 1906. Chikballapur Taluk Cutcherry.
					Dry ...	495	9				
					Wet ...	115	1				
					Garden ...	27	35				

Boundaries.

East—Kammagatahalli.
West—Batlu Byrappanadinne and Bodenahalli.
North—Yalakarallahalli, Chokkanahalli and Jodi. Narenhalli.
South—Mandikal and channel.

NOTE.—The sale is free from all tenures, encumbrances and rights created by the Kayamguttadars or any of their predecessors in title or in anywise subsisting against them.

Notification dated 2nd May 1906.

It is hereby notified for public information that the undermentioned Jodi village, which has been duly attached in satisfaction of the arrears of revenue due to Government (as shown in the subjoined statement) by the said Jodidars, will be sold by public auction at the place and on the date mentioned in the annexed statement. The sale will commence at 11 A.M., on the date specified, and the village will be knocked down to the highest bidder without reserve.

2. Provided that when a village is divided into separate recognized vrittis, the Deputy Commissioner may, at his option, instead of selling the village as a whole, sell each vritti separately.

3. The purchaser will be required to deposit twenty-five per cent of the purchase money at the time of sale, and where the remainder of the purchase money may not be paid within fifteen days from the day of sale, the money so deposited shall be liable to forfeiture.

4. When such deposit shall not be made nor the remaining purchase money paid up, the lands shall be re-sold at the expense and risk of the first purchaser.

5. Persons bidding at the sale may be required to state whether they bid on their own account or as agents, and in the latter case to deposit a written authority signed by their principals, otherwise their bids may be rejected.

6. The sale shall be stayed, if the defaulters or any other person acting on their behalf or claiming an interest in the land, tender the full amount of the arrears of revenue with the interest and other charges, before the property is knocked down or give satisfactory proof that the amount of arrears, etc., has been paid up or furnish security under Section 170 of the Mysore Land Revenue Code.

7. Purchaser having completed the payment of the purchase money will, as soon as the sale has been confirmed, be placed in immediate possession, and the village will be registered in the name of the purchaser, and a certificate of sale signed and sealed by the Deputy Commissioner will be granted to him. It is to be distinctly understood that the Government are not responsible for errors of description and in estimated extent.

8. Provided parties deeming themselves aggrieved by the sale shall be at liberty to appeal to the Government within ninety days from the day of sale and the purchase shall be conditional on the final order in such appeal.

District	Taluk	Hobli	Village	Names of Jodidars	Estimated extent			Estimated gross rental or berij			Quit-rent payable annually to Government			Arrears of Government revenue for which village is to be sold			Date of sale, etc.
						A.	g.	Rs.	a.	p.	Rs.	a.	p.	Rs.	a.	p.	
Kolar	Kolar	Holur	Jodi Holur	Shanbhog Seenappa and others	Peramboke	20	9	.....			612	12	9	613	12	9	Kolar Taluk Cutcherry. 21st June 1906.
					Dry ...	1,000	27	2,010	12	0							
					Wet ...	2	24	13	0	0							
					Garden ...	46	18	190	8	0							
						1,069	38	2,214	4	0							

Boundaries.
East—Vadigenahalli.
West—Jannappalli, Naganayakanahalli.
North—Padathimmanahalli.
South—Bennangur.

NOTE.—The sale is free from all tenures, encumbrances and rights created bythe Jodidars or any of their predecessors in title or in anywise subsisting against them.

Notification dated 3rd May 1906.

1. It is hereby notified for public information that the undermentioned Jodi village which has been duly attached in satisfaction of the arrears of revenue due to Government (as shown in the subjoined statement) by the said Jodidar, will be sold by public auction at the place and on the date mentioned in the annexed statement. The sale will commence at 11 A.M., on the date specified, and the village will be knocked down to the highest bidder without reserve.

2. Provided that when a village is divided into separate recognized vrittis, the Deputy Commissioner may, at his option, instead of selling the village as a whole, sell each vritti separately.

3. The purchaser will be required to deposit twenty-five per cent of the purchase money at the time of sale, and where the remainder of the purchase money may not be paid within fifteen days from the day of sale, the money so deposited shall be liable to forfeiture.

4. When such deposit shall not be made nor the remaining purchase money paid up, the lands shall be re-sold at the expense and risk of the first purchaser.

5. Persons bidding at the sale may be required to state whether they bid on their own account or as agents, and in the latter case to deposit a written authority signed by their principals, otherwise their bids may be rejected.

6. The sale shall be stayed, if the defaulter or any other person acting on his behalf or claiming an interest in the land, tenders the full amount of the arrears of revenue with the interest and other charges, before the property is knocked down or give satisfactory proof that the amount of arrears, etc., has been paid up or furnish security under Section 170 of the Mysore Land Revenue Code.

7. Purchaser having completed the payment of the purchase money will, as soon as the sale has been confirmed, be placed in immediate possession, and the village will be registered in the name of the purchaser, and a certificate of sale signed and sealed by the Deputy Commissioner will be granted to him. It is to be distinctly understood that the Government are not responsible for errors of description and in estimated extent.

8. Provided parties deeming themselves aggrieved by the sale shall be at liberty to appeal to the Government within ninety days from the day of sale and the purchase shall be conditional on the final order in such appeal.

District	Taluk	Hobli	Village	Name of Jodidar	Estimated extent	Estimated gross rental or beriz	Quit-rent payable annually to Government	Arrears of Government revenue for which village is to be sold	Date of sale, etc.
					K. k. p.	Rs. a. p.	Rs. a. p.	Rs. a. p.	
Kolar	Bowringpet	Budikote	Jodi Chembenahalli	M. Srikanta Sastri	6 3 15	105 8 0	64 0 0	58 8 2	Bowringpet Taluk Cutcherry. 21st June 1906.
					Boundaries. East—Naganahalli. West—Jantiganahalli. North—Yachamanahalli. South—Hosahalli.				

NOTE—The sale is free from all tenures, encumbrances and rights created by the Jodidar or any of his predecessors in title or in anywise subsisting against him.

Notification dated 3rd May 1906.

1. It is hereby notified for public information that the undermentioned Jodi village, which has been duly attached in satisfaction of the arrears of revenue due to Government (as shown in the subjoined statement) by the said Jodidars, will be sold by public auction at the place and on the date mentioned in the annexed statement. The sale will commence at 11 A.M. on the date specified, and the village will be knocked down to the highest bidder without reserve.

2. Provided that when a village is divided into separate recognized vrittis, the Deputy Commissioner may, at his option, instead of selling the village as a whole, sell each vritti separately.

3. The purchaser will be required to deposit twenty-five per cent of the purchase money at the time of sale, and where the remainder of the purchase money may not be paid within fifteen days from the day of sale, the money so deposited shall be liable to forfeiture.

4. When such deposit shall not be made nor the remaining purchase money paid up, the lands shall be re-sold at the expense and risk of the first purchaser.

5. Persons bidding at the sale may be required to state whether they bid on their own account or as agents, and in the latter case to deposit a written authority signed by their principals, otherwise their bids may be rejected.

6. The sale shall be stayed, if the defaulters or any other person acting on their behalf or claiming an interest in the land, tender the full amount of the arrears of revenue with the interest and other charges, before the property is knocked down or give satisfactory proof that the amount of arrears, etc., has been paid up or furnish security under Section 170 of the Mysore Land Revenue Code.

7. Purchaser having completed the payment of the purchase money will, as soon as the sale has been confirmed, be placed in immediate possession, and the village will be registered in the name of the purchaser, and a certificate of sale signed and sealed by the Deputy Commissioner will be granted to him. It is to be distinctly understood that the Government are not responsible for errors of description and in estimated extent.

8. Provided parties deeming themselves aggrieved by the sale shall be at liberty to appeal to the Government within ninety days from the day of sale and the purchase shall be conditional on the final order in such appeal.

District	Taluk	Hobli	Village	Names of Jodidars	Estimated extent	Estimated gross rental or beriz	Quit-rent payable annually to Government	Arrears of Government revenue for which village is to be sold	Date of sale, etc.
					A. g.	Rs. a. p.	Rs. a. p.	Rs. a. p.	
Kolar	Bowringpet	Kasaba	Jodi Kanambele	Murti Rao and others	670 17	325 0 0	168 0 0	80 3 0	Bowringpet Taluk Cutcherry. 21st June 1906.
					Boundaries. East—Dodda Ankonadahalli. West—Yeluvahalli and Byadabele. North—Karabele. South—Jodi Ainorahosahalli.				

NOTE.—The sale is free from all tenures, encumbrances and rights created by the Jodidars or any of their predecessors in title or in anywise subsisting against them.

Notification dated 7th May 1906.

1. It is hereby notified for public information that the undermentioned Jodi village, which has been duly attached in satisfaction of the arrears of revenue due to Government (as shown in the subjoined statement) by the said Jodidars, will be sold by public auction at the place and on the date mentioned in the annexed statement. The sale will commence at 11 A.M. on the date specified, and the village will be knocked down to the highest bidder without reserve.

2. Provided that when a village is divided into separate recognized vrittis, the Deputy Commissioner may, at his option, instead of selling the village as a whole, sell each vritti separately.

3. The purchaser will be required to deposit twenty-five per cent of the purchase money at the time of sale and where the remainder of the purchase money may not be paid within fifteen days, from the day of sale, the money so deposited shall be liable to forfeiture.

4. When such deposit shall not be made nor the remaining purchase money paid up, the lands shall be re-sold at the expense and risk of the first purchaser.

5. Persons bidding at the sale may be required to state whether they bid on their own account or as agents, and in the latter case to deposit a written authority signed by their principals, otherwise their bids may be rejected.

6. The sale shall be stayed, if the defaulters or any other person acting on their behalf or claiming on interest in the land, tender the full amount of the arrears of revenue with the interest and other charges, before the property is knocked down or give satisfactory proof that the amount of arrears, etc., has been paid up or furnish security under Section 170 of the Mysore Land Revenue Code.

7. Purchaser having completed the payment of the purchase money will, as soon as the sale has has been confirmed, be placed in immediate possession, and the village will be registered in the name of the purchaser, and a certificate of sale signed and sealed by the Deputy Commissioner, will be granted to him. It is to be distinctly understood that the Government are not responsible for errors of description and in estimated extent.

8. Provided parties deeming themselves aggrieved by the sale shall be at liberty to appeal to the Government within ninety days from the day of sale and the purchase shall be conditional on the final order in such appeal.

District	Taluk	Hobli	Village	Names of Jodidars	Estimated extent	Estimated gross rental or beriz	Quit-rent payable annually to Government	Arrears of Government revenue for which village is to be sold	Date of sale, etc.
					A. g.	Rs. a. p	Rs. a. p.	Rs. a. p.	
Kolar	Bowringpet	Kasaba	Jodi Yeluvahalli	Jodidar Srinivasa Raghavachar and others	674 0	1,000 0 0	196 1 10	197 9 10	Bowringpet Taluk Cutcherry. 21st June 1906.

Boundaries.

East—Kanambele and Ainorahosahalli

West—Koramangalaguttahalli

North—Madivala

South—Vambattuguli and Kasipura

NOTE.—The sale is free from all tenures, encumbrances and rights created by the Jodidars or any of their predecessors in title or in anywise subsisting against them.

Notification dated 7th May 1906.

1. It is hereby notified for public information that the undermentioned Jodi village, which has been duly attached in satisfaction of the arrears of revenue due to Government (as shown in the subjoined statement) by the said Jodidars, will be sold by public auction at the place and on the date mentioned in the annexed statement. The sale will commence at 11 A.M. on the date specified, and the village will be knocked down to the highest bidder without reserve.

2. Provided that when a village is divided into separate recognized vrittis, the Deputy Commissioner may, at his option, instead of selling the village as a whole, sell each vritti separately.

3. The purchaser will be required to deposit twenty-five per cent of the purchase money at the time of sale, and where the remainder of the purchase money may not be paid within fifteen days from the day of sale, the money so deposited shall be liable to forfeiture.

4. When such deposit shall not be made nor the remaining purchase money paid up, the lands shall be re-sold at the expense and risk of the first purchaser.

5. Persons bidding at the sale may be required to state whether they bid on their own account or as agents, and in the latter case to deposit a written authority signed by their principals, otherwise their bids may be rejected.

6. The sale shall be stayed, if the defaulters or any other person acting on their behalf or claiming an interest in the land, tender the full amount of the arrears of revenue with the interest and other charges, before the property is knocked down or give satisfactory proof that the amount of arrears, etc., has been paid up or furnish security under Section 170 of the Mysore Land Revenue Code.

7. Purchaser having completed the payment of the purchase money will, as soon as the sale has been confirmed, be placed in immediate possession, and the village will be registered in the name of the purchaser, and a certificate of sale signed and sealed by the Deputy Commissioner will be granted to him. It is to be distinctly understood that the Government are not responsible for errors of description and in estimated extent.

8. Provided parties deeming themselves aggrieved by the sale shall be at liberty to appeal to the Government within ninety days from the day of sale and the purchase shall be conditional on the final order in such appeal.

District	Taluk	Hobli	Village	Names of Jodidars	Estimated extent	Estimted gross rental or beriz	Quit-rent payable annually to Government	Arrears of Government revenue for which village is to be sold	Date of sale, etc.
					A. g.	Rs. a. p.	Rs. a. p.	Rs. a. p.	
Kolar.	Bowringpet.	Kasaba.	Ainorahosahalli.	K. Narayanachar and others.	435 0	2,000 0 0	131 8 0	133 0 0	21st June 1906. Bowringpet Taluk Cutcherry.

Boundaries.

East—Dodda Ankondahalli.
West—Kasipura, Vambattuguli and Yeluvahalli.
North—Jodi Kanambele.
South—Hunasanahalli and Kanavekallu.

NOTE.—The sale is free from all tenures, encumbrances and rights created by the Jodidars or any of their predecessors in title or in anywise subsisting against them.

Notification dated 7th May 1906.

It is hereby notified for public information that the undermentioned Jodi village, which has been duly attached in satisfaction of the arrears of revenue due to Government (as shown in the subjoined statement) by the said Jodidars, will be sold by public auction at the place and on the date mentioned in the annexed statement. The sale will commence at 11 A.M., on the dates specified, and the village will be knocked down to the highest bidder without reserve.

2. Provided that when a village is divided into separate recognized vrittis, the Deputy Commissioner may, at his option, instead of selling the village as a whole, sell each vritti separately.

3. The purchaser will be required to deposit twenty-five per cent of the purchase money at the time of sale, and where the remainder of the purchase money may not be paid within fifteen days from the day of sale, the money so deposited shall be liable to forfeiture.

4. When such deposit shall not be made nor the remaining purchase money paid up, the lands shall be re-sold at the expense and risk of the first purchaser.

5. Persons bidding at the sale may be required to state whether they bid on their own account or as agents and in the latter case to deposit a written authority signed by their principals, otherwise their bids may be rejected.

6. The sale shall be stayed, if the defaulters or any other person acting on their behalf or claiming an interest in the land, tender the full amount of the arrears of revenue with the interest and other charges, before the property is knocked down or give satisfactory proof that the amount of arrears, etc., has been paid up or furnish security under Section 170 of the Mysore Land Revenue Code.

7. Purchaser having completed the payment of the purchase money will, as soon as the sale has been confirmed, be placed in immediate possession and the village will be registered in the name of the purchaser and a certificate of sale signed and sealed by the Deputy Commissioner will be granted to him. It is to be distinctly understood that the Government are not responsible for errors of description and in estimated extent.

8. Provided parties deeming themselves aggrieved by the sale shall be at liberty to appeal to the Government within ninety days from the day of sale, and the purchase shall be conditional on the final order in such appeal.

District	Taluk	Hobli	Village	Names of Jodidars	Estimated extent	Estimated gross rental or beriz	Quit-rent payable annually to Government	Arrears of Government revenue for which village is to be sold	Date of sale, etc.
					K. k. p.	Rs. a. p.	Rs. a. p.	Rs. a. p.	
Kolar	Bowringpet	Kasaba	Sarvamanya Ramanayakanahalli	Hyder Hussain and others	27 10 0	13 12 6	13 12 6	15 4 6	21st June 1906. Bowringpet Taluk Cutcherry
					Boundaries. East—Madigarahalli and Honnenahalli. West—Sulikunte. North—Madamangala. South—Hagalakote and Sultanpura.				

Note.—The sale is free from all tenures, encumbrances and rights created by the Jodidars or any of their predecessors in title or in any wise subsisting against them.

C. SESHADRIENGAR,
for *Dy. Comr., Kolar Dt.*

IN THE COURT OF THE ASSISTANT COMMISSIONER AND 1ST CLASS MAGISTRATE, KOLAR GOLD FIELDS.

Notice dated 19th April 1906.

Police Property Form No. 31, dated 10th March 1906, of Champion Station, A. Division.

Notice is hereby given that the marginally noted properties produced by the Champion Police, will be confiscated and sold for Government, if not claimed within six months.

1. Cash annas 15.
2. A piece of candle.
3. Some playing cards.
4. A cumbli piece.
5. A gunny bag piece.

Notice dated 19th April 1906.

Police Property Form No. 10, dated 31st March 1906, of Ooregum Station, B. Division.

Notice is hereby given that the marginally noted property produced by the Ooregum Police, will be sold by public auction, if not claimed within six months from the date of this notice.

A gold scarp pin.

R. B. PLUMER,
Asst. Comr. & 1st Class Magte.

KOLAR GOLD FIELDS SANITARY BOARD.

Notice dated 5th May 1906.

Notice is hereby given that the contract for the exclusive right of collecting fees for slaughtering (1) cattle, (2) sheep and goats in the slaughter enclosures at—

(1) Marikuppam (Steven's camp),

(2) Robertsonpet market, including daily slaughtering for the villages and camps, together with the right of collecting manure in the bandy stand, at the said market, from the 1st July 1906 to 30th June 1907,

will be put up to public auction and sold to the highest bidder, at the Court house, Champion Reef, at 11 A.M. on the 21st June 1906.

The successful bidder will be required to deposit at once, in cash, or currency notes, (¼) one-fourth of the purchase money, or his bid will be cancelled, and the right to collect the manure and to collect fees for slaughtering animals re-auctioned, any loss to which the Sanitary Board may be thereby put to be borne by the said bidder. The balance of the purchase money, etc., to be paid thereafter, in eleven (11) regular monthly instalments, commencing from the 1st August 1906.

The contractor will be called upon to enter into the following agreements, with the undersigned :—

(1) To slaughter only in the licensed slaughter houses or in such place as the Sanitary Board may from time to time direct.

(2) To keep the slaughter enclosures and bandy stand clean, and in sanitary condition, to the satisfaction of the Sanitary Inspector, or other officer of the Board.

(3) To remove all skins, carcasses, etc., immediately from the slaughter enclosures.

(4) To remove without delay all bones, horns and offal, from the slaughter enclosures, and bury them in such place as may be pointed out, by the Sanitary Inspector.

(5) The contractor will also be called upon to take charge of the slaugher enclosures and bandy stand, on the 30th June 1906, and on the expiry of the contract to hand over the said slaughter enclosures, and bandy stand, to the President of the Sanitary Board, or such officer as he may depute for the purpose, in good order and repair.

The undersigned reserves to himself the right to refuse any bid, without assigning any reason.

R. B. PLUMER,
Vice-President.

MYSORE DISTRICT.

Abstract Notification dated 6th April 1906.

It is hereby notified that Jodi Dodda Somanahalli village, Santhe Bachahalli Hobli, Krishnarajpete Taluk, will be sold by public auction in the Office of the Amildar of the Taluk on the 1st June 1906 on account of arrears of revenue due to Government.

For further particulars see page 662—663 of part II of *Mysore Gazette* No. 17, dated 26th April 1906.

Abstract Notification dated 7th April 1906.

It is hereby notified that Jodi Somanathapura, Sosale Hobli, T.-Narsipur Taluk, will be sold by public auction in the Office of the Amildar of the Taluk on the 5th June 1906 on account of arrears of revenue due to Government.

For further particulars see page 663—664 of part II of *Mysore Gazette* No. 17, dated 26th April 1906.

N. VENKATA RAO, *In-charge Dy. Comr.*

Abstract Notification dated 18th April 1906.

It is hereby notified that Jodi Chamalapura village, Kasaba hobli, Yedatore Taluk, will be sold by public auction in the said Jodi Chamalapura village on the 8th June 1906 on account of arrears of revenue due to Government.

For further particulars see page 705 of Part II of *Mysore Gazette* No. 18, dated 3rd May 1906.

H. H. SPARKES,
Dy. Comr.

Notice dated 24th April 1906.

The attention of the public is invited to the notification published on page 706 of the *Mysore Gazette*, Part II, dated the 3rd May 1906, regarding the sale of the right to collect tolls and market fees in the Mysore District for the year 1906-07, *i. e.*, from the 1st July 1906 up to the 30th June 1907.

H. H. SPARKES,
President, Dist. Board.

SHIMOGA DISTRICT.

Notice dated 3rd May 1906.

It is hereby notified for the information of the public that the exclusive right of transporting passengers, goods, vehicles, animals, etc., and of collecting tolls at the ferries specified in the annexed list will be put up to auction on the dates specified therein by the Amildar or Sheristadar at each Taluk Head-quarters, subject to the confirmation by the Deputy Commissioner.

2. The auction will begin at 12 noon on the days fixed and will, if necessary, be continued on the following days.

3. The ferries will be leased out for twelve months, from the 1st July 1906 to 30th June 1907, both days inclusive.

4. The monopoly covers only so much of the river as lies within 500 yards on each side of the ferry. The Deputy Commissioner forbids the transport within these limits of passengers, etc., as aforesaid and the collection of tolls therefor, except by or on behalf of the lessee or other person authorized by the Deputy Commissioner.

5. The accepted bidder shall immediately on the declaration of the acceptance of his bid, produce before the officer conducting the sales, one-fourth of the accepted bid, failing which, the lease will be re-sold at the first purchaser's risk.

6. The accepted bidder shall, within four days of the acceptance of the bid, execute in favor of the Deputy Commissioner an agreement on a stamp paper with two tangible sureties for the due fulfilment of the contract and deliver it to the Amildar or Sheristadar, as the case may be, and thereupon the Deputy Commissioner will authorize the executant of the said mutchalika to enter into his contract. If the accepted bidder fails to execute and deliver the mutchalika, the lease will be re-sold or otherwise disposed of at the defaulting bidder's risk, the deposit already made being forfeited to Government.

7. Where there are no boats or "Tokras" they shall be provided by the lessees at all the ferries. The boats kept by the lessees shall always be of the size and quality approved by the Deputy Commissioner, Executive Engineer or Amildar.

8. Wherever boats and platforms are provided by Government, they shall be returned to Government on the termination of the lease or on being demanded by the Deputy Commissioner or other officer authorized by him, in the same condition in which they were supplied to him, subject to reasonable wear and tear. Loss or damage arising from neglect or want of care shall be made good by the lessee. The lessee shall always be bound to keep the ferries or boats in good order and clean.

9. The lessee shall be entitled to collect tolls at the rates specified in the list hereto annexed and no fee or toll shall be demanded in the cases enumerated below :—

(*a*) Government mails, stores and remittance and all persons, animals and vehicles employed in carrying the same.

(*b*) All Government officials including troops travelling on duty and also in the case of Police officers, prisoners and property in their custody.

(*c*) All parties employed by Government servants to carry official reports when so carrying such reports.

(*d*) Children under twelve years of age.

(*e*) The Deputy Commissioner is, at any time and for any length of time, at liberty to attach the ferry boats for the conveyance of troops, camp equipage and followers, and the contractors and their servants will be bound to give all reasonable assistance to ensure their speedy and safe carriage.

10. The balance of the contract amount shall be paid by the lessee to Government in nine monthly instalments commencing from July 1904, the deposit being credited to the last three "Khists." All payments shall be made in the Treasury of the taluk in which the ferry lies.

11. At each ferry a board showing the rates and the weight to be carried should be put in a conspicuous place by the lessee at all times when the ferry is worked, excepting those places where provision is made by the Deputy Commissioner.

12. The Deputy Commissioner reserves to himself the power of accepting or rejecting any bid without assigning any reasons therefor.

13. The contractor shall have a sufficient number of boats in readiness at either side of the ferry and shall take care that mails, travellers, passengers, animals, carriages, etc., are not unnecessarily delayed whether by day or night, but are ferried over with expedition.

14. Every passenger crossing a ferry is allowed to carry with him his luggage not exceeding in weight an Indian maund without any additional fee for the same. Any quantity in excess of the above will be liable to an additional fee of one anna for each Indian maund or less.

15. Should the contractor be found to have acted contrary to any of the above rates, he shall, for every breach of such rules, be liable to a fine not exceeding Rs. 50 or his contract will be liable to be cancelled as the Deputy Commissioner may deem fit.

Taluk	Class of ferry	Name of ferry	Date of auction
Shimoga ...	2nd class.	Holehonur, Bhadra river	Thursday, 24th May 1906.
	4th class.	Danayakanpura do	
	Do	Kagikodmaggi do	
	Do	Kudli, Sugur, Tunga river	
	Do	Mangote, Tungabhadra river ...	
	Do	Gazanur Tunga river	
Honnali ...	1st class.	Honnali, Tungabhadra river	Saturday, 26th May 1906.
	4th class.	Kammarghatta do	
	Do	Hiregonigere do	
	Do	Sasveballi do	
	Do	Hanagavadi do	
	Do	Govinkovi do	
	Do	Chilur do	Tuesday, 29th May 1906.
Shikarpur ...	Do	Kotta, Kumudvati river	
	Do	Kalkoppa do	
	Do	Nimbegondi do	
	Do	Mugalgere do	
	Do	Churchigundi do	
	Do	Issoor do	
	Do	Basavanabalu do	Friday, 25th May 1906.
Sorab ..	Do	Joladagadde, Varada river	
	Do	Kudavi do	
	Do	Balebail do	
	Do	Kerehalli do	
	Do	Telagadde do	
	Do	Bankasana do	
	Do	Sabur do	
	Do	Hasave Halla do	
	Do	Hadaga do do	
	Do	Bennur, Dandavati river	
	Do	Kolekoppa do	Saturday, 26th May 1906.
Sagar ...	4th class.	Kanasi Kallugundi river, Saidur ...	
	Do	Haravugundi Sullur ...	
	Do	Attisal Kadagalale ...	
	Do	Saravati Hamse ...	
	Do	Kudli Hanagere ...	
	Do	Holebagalu Kagarasu ...	
	Do	Holekoppa Sithur ...	
	Do	Hasarmaggi Kelur ...	
	Do	Udukunda, Saravati Hirebasakuru ...	
	Do	Yennehole river, Bennagonda ...	
	Do	Haraduru do Kiravase ...	
	Do	Setavehole Herakere ...	
Nagar ...	Do	Malali	Monday, 28th May 1906.
	Do	Kadalagudde	
	Do	Muduba	
Tirthahalli...	Do	Mandagadde, Tunga river	
	Do	Byagavalli do	Thursday, 31st May 1906.
	Do	Haddur do	
	Do	Kodgi do	
	Do	Tirthamattur do	
	Do	Halikoppa do	
	Do	Hosakoppa do	

Schedule of rates.

No.	Name.	First class.	Second class.	Third class.	Fourth class.
		Rs. a. p.	Rs. a. p.	Rs. a. p.	Rs. a. p.
1	On every four-wheeled carriage ...	0 12 0	0 8 0	0 6 0	0 6 0
2	Do two-wheeled do ...	0 8 0	0 6 0	0 4 0	0 3 0
3	Do laden cart ...	0 8 0	0 6 0	0 4 0	0 3 0
4	Do empty cart ...	0 5 0	0 4 0	0 3 0	0 2 0
5	Do laden horse, animals with horses and mule.	0 3 0	0 2 0	0 1 0	0 1 0
6	Horse or tattu, laden or unladen ..	0 3 0	0 2 0	0 1 0	0 1 0
7	Unladen horse, animals with horses and mule.	0 2 0	0 1 0	0 0 6	0 0 6
8	Ass, if laden or not laden ...	0 1 0	0 1 0	0 0 6	0 0 6
9	Camel, laden or unladen ...	0 4 0	0 3 0	0 2 0	0 2 0
10	Sheep and goat	0 0 3	0 0 3	0 0 1	0 0 1
11	Palanquin	0 12 0	0 8 0	0 8 0	0 4 0
12	Dholi or tongon	0 6 0	0 4 0	0 4 0	0 2 0
13	For every man and woman except children of 12 years and below of age.	0 1 0	0 0 6	0 0 3	0 0 3

Abstract Notification dated 4th May 1906.

It is hereby notified for general information that the right of collecting tolls at the toll gate at Agumbe ghat in the Tirthahalli Taluk, from 1st July 1906 to 30th June 1907, will be sold by public auction in the Taluk Cutcherry at Tirthahalli, by the Deputy Commissioner or the Assistant Commissioner deputed for the purpose on the 23rd May 1906 and that of collecting the same at Hyderghar ghat and at Lakshmipur in the Nagar Taluk in the Taluk Cutcherry at Kallurkatte on the 26th May 1906 by the Assistant Commissioner of Sagar.

For further particulars see original notification published at page 711 of the *Mysore Gazette*, dated 3rd May 1906.

M. S. NARAYAN RAO,
Deputy Commissioner.

Memo.

Mr. M. K. Hanumantha Rao, Acting Amildar and 3rd class Magistrate, Sorab Taluk, is hereby invested with the following additional powers to be exercised by him until he is relieved by Mr. S. Krishnappa, Amildar, on leave.

1. Power to make orders prohibiting repetitions of nuisances (Section 143, Cr. Pro. Code).
2. Power to make orders under Section 174.
3. Power to take cognizance of offences upon complaint, Section 190.
4. Do upon Police Reports, Section 190.

M. S. NARAYAN RAO,
District Magistrate.

KADUR DISTRICT.

Notice.

Notice is hereby given that a sum of Rs. 2-8-0, being the value of a kit box due to the deceased Shankarappa who was Lance Dafadar No. 84 of the Tarikere Taluk, will be forfeited to Government, if not claimed by his heirs within three months from this date. Persons having any claim thereto may apply for the amount to the undersigned within the time allowed.

Notification dated 21st April 1906.

Under para 5 of Government Notification No. 9007—Leg. 56, dated Bangalore 11th December 1901, it is hereby declared that fishing in the rivers Tunga and Bhadra running through the Kadur District is prohibited, during the season from 1st April up to 30th September 1906.

V. KRISHNA RAO,
for *Dy. Comr.*

IN THE COURT OF THE MUNSIFF AT CHIKBALLAPUR.

Miscellaneous Application No. 461 *of* 1905-06.

In the matter of the estate of Kakarla Samba Sastri, resident of Sidlaghatta ... ... *Deceased.*

Achamma, daughter of Narasimha Bhatta of Sidlaghatta ... .. *Applicant.*

Whereas the applicant Achamma, resident of Sidlaghatta, claiming to be the wife of the said Kakarla Samba Sastri, deceased, has applied to this Court for a certificate under Regulation VII of 1901, to collect debts payable in respect of the estate of the said Samba Sastri, deceased, resident of Sidlaghatta.

Notice is hereby given of the said application; and all claimants in the estate of the said Samba Sastri, resident of Sidlaghatta, deceased, are invited to appear in this Court on Thursday the 31st day of May 1906, when the petition of the said Achamm, aapplicant, will be heard, and the right to the certificate will be determined.

Given under my hand and the seal of the Court this 16th day of April 1906.

A. NARASIMMAIENGAR,
Munsiff.

Miscellaneous Application No. 444 *of* 1905-06.

In the matter of the estate of Ranganna, native of Kyalanur, Devanhalli Taluk ... ... *Deceased.*

One Ramanna, son of Gopalaiya of Kyalanur, Devanhalli Taluk, residing in Pavagada. 2. Anapurnamma, daughter of Ranganna, deceased of Kyalanur, Devanhalli Taluk, residing in Bangalore .. .. *Applicants.*

Whereas the first and the second applicants residents of Pavagada and Bangalore, respectively, claiming to be the brother's son and daughter respectively of the said Ranganna, deceased, have applied to this Court for a certificate under Regulation VII of 1901 to collect debts payable in respect of the estate of Ranganna, deceased, resident of Kyalanur.

Notice is hereby given of the said application; and all claimants in the estate of the said Ranganna, deceased, are invited to appear in this Court on Thursday the 31st day of May 1906, when the petition of the said Ramanna and Anapurnamma, applicants, will be heard, and the right to the certificate will be determined.

Given under my hand and the seal of the Court this 11th day of April 1906.

P. MAHADEVAIYA, *Munsiff.*

SHIMOGA DIVISION.

Notice dated 13*th April* 1906.

The public are hereby informed that Sudurhalla bridge, in $\frac{6}{7}$ mile of Shimoga-Hyderghar Ghat road, is under repairs, and it is not at present safe for traffic during nights. Temporary road is under construction.

C. A. MADHADEVA SASTRI, *Executive Engineer.*

BANGALORE CITY MUNICIPALITY.

Notice, dated the 14*th April* 1906.

The following cast-iron lamp-posts and lanterns are available for sale in the Bangalore City Municipality:—

Serial No.	Description	Height		Per	Rate			Number available
		Feet	Inches		R	a.	p.	
1	Plain pillar with short bottom	7	10	Each ...	9	0	0	37
2	Do with long bottom	7	10	Do ...	11	4	0	13
3	Fluted pillar, circular base, light	10	...	Do ...	12	12	0	60
4	Do do heavy	9	6	Do ...	18	12	0	12
5	Do do extra heavy	10	...	Do ..	21	12	0	5
6	Do octagonal base	9	6	Do ...	18	0	0	183
7	Plain pillar, square pedestal	9	6	Do ...	22	8	0	19
8	Semi-fluted and plain-pillar	9	9	Do ...	15	12	0	23
9	Large, ornamental pillar for single lamps	8	10	Do ...	22	8	0	15
10	Lanterns, second-hand	..	...	...	1	12	6	200

N. B. Delivered free at the Railway Station, packing charges and risk of breakage to be borne by purchasers.

Item Nº 6 Fluted Pillar (octogonal Base)

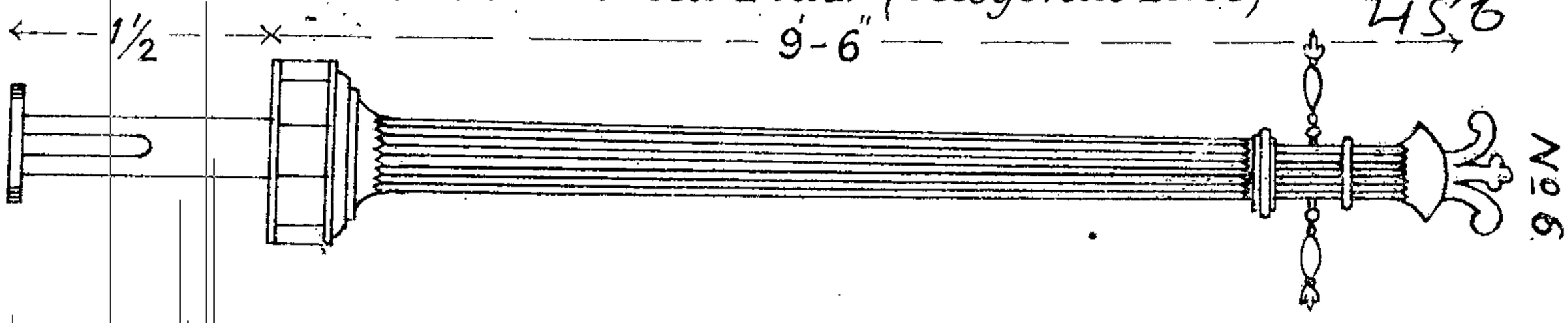

Item Nº 9 Large ornamental Pillar for single lamps.

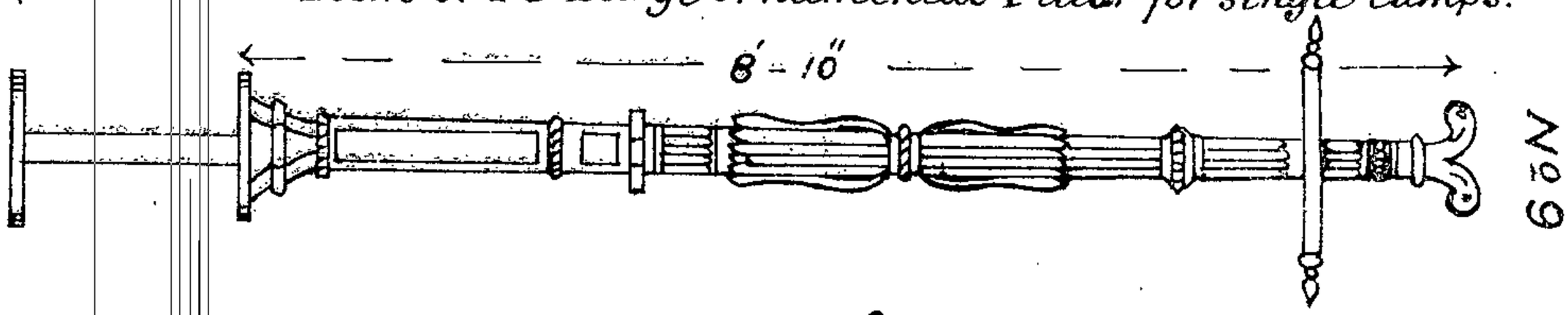

Square
Item Nº 7 Plain Pillar Pedestal.

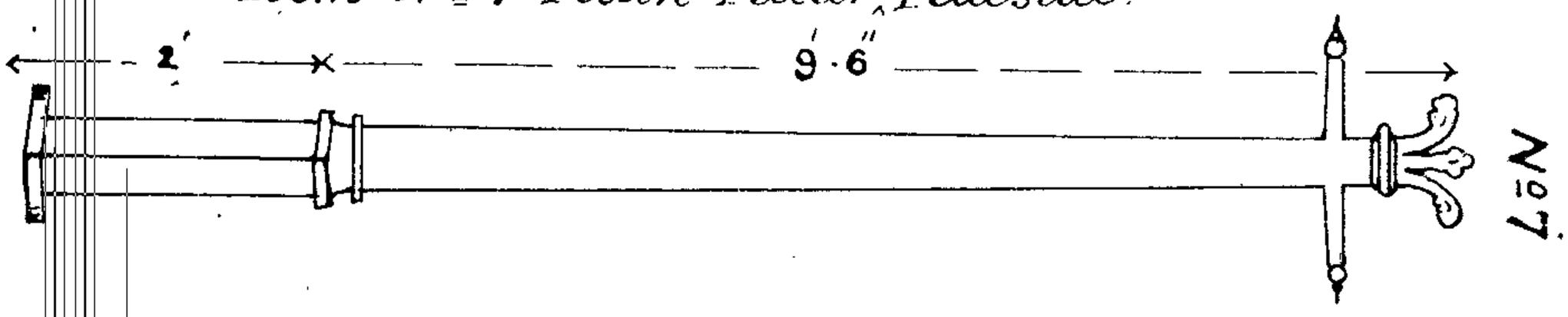

Item Nº 1 Plain Pillar

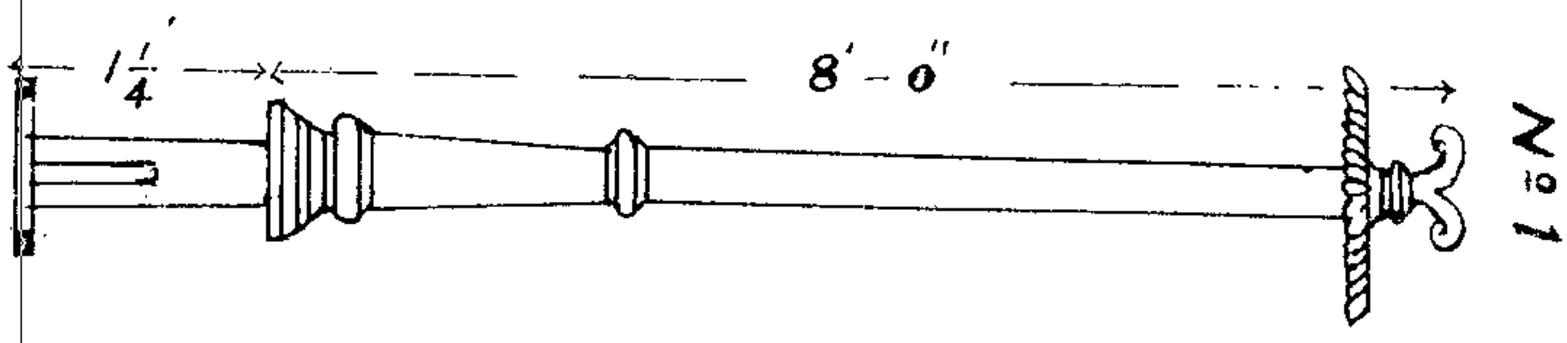

Item Nº 2 Plain Pillar with long bottom

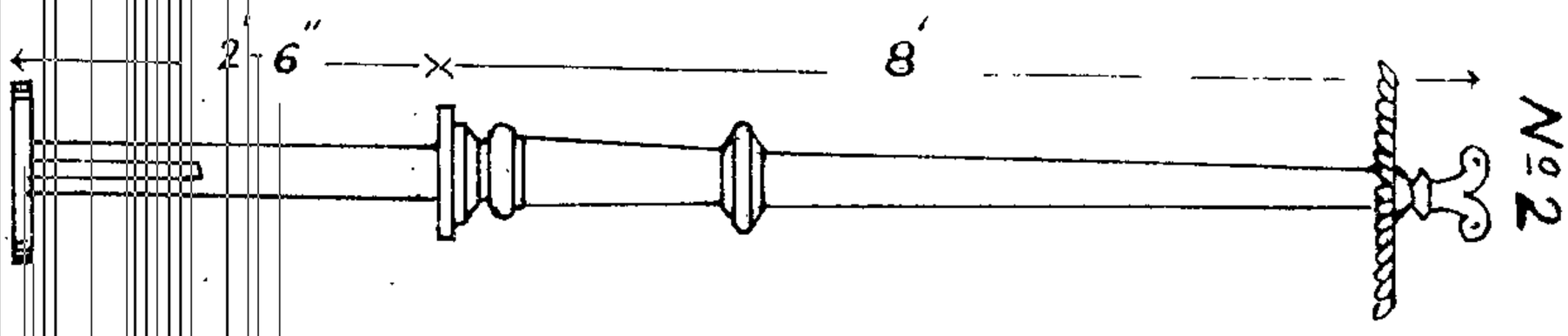

Item Nº 8
Semi Fluted and Plain Pillar

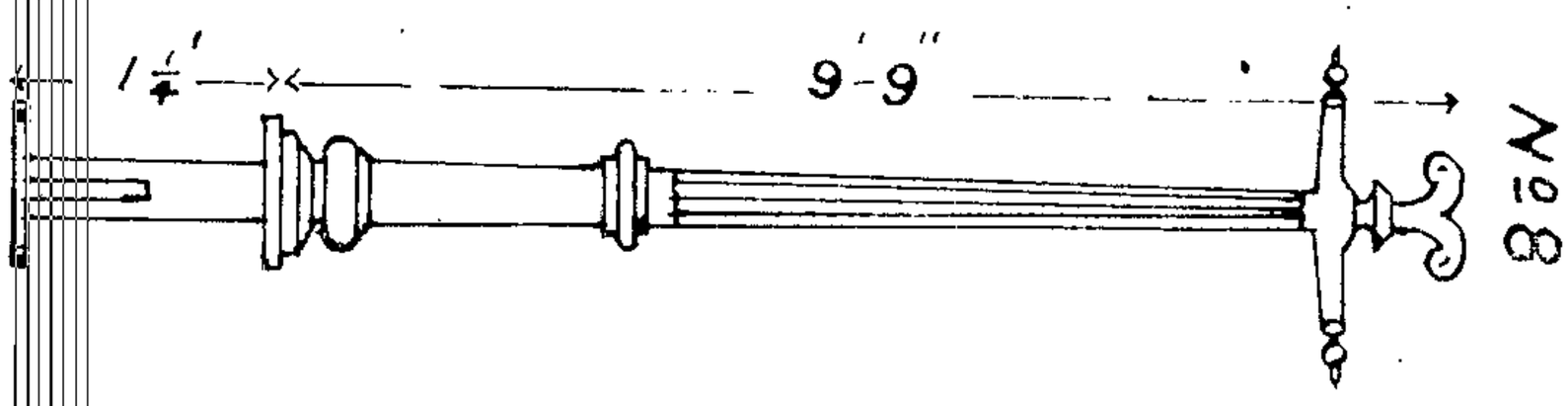

Nº 3 Fluted Pillar circular base (light)

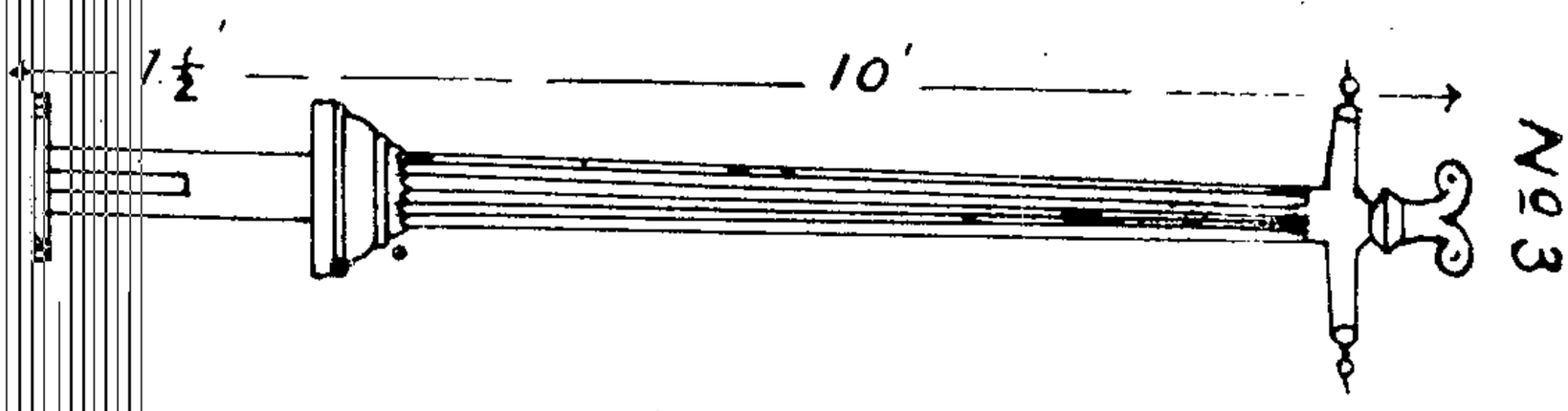

Notice dated 8th May 1906.

The following business will be transacted at an ordinary meeting of the Municipal Commissioners for the City of Bangalore, to be held at their office premises at 5 P.M., on Thursday the 17th May 1906:—

Deferred Proposition.

1. Sub-Committee's report suggesting revision of establishment under several branches of the City Municipal service with a proposition statement embodying their proposals in order to introduce reform in the working of the Municipality, called for in para 13 of Government Order on the report of the Municipal Financial Committee.

Ordinary Propositions.

1. Cash Account Current, Demand, Collection and Balance Statements, Mortuary return, Progress report of works, Memo of visitors to the Srinivasa Mandiram Library, City Municipal English and Kannada Schools returns, Maternity return, Langarkhana return, Statement of materials and statement of rewards for the destruction of dogs, and return of prosecutions for April 1906.

2. Government Proceedings No. 11245-84—Ml. (223-05)-6, dated the 2nd April 1906, calling for the views of the Board on the question of appointing the Chief and the Assistant Sanitary Inspectors out of the qualified candidates.

3. The General and Revenue Secretary's docket No. 11142—Ml. (253-05)-2, dated the 27th April 1906, calling for the Board's opinion regarding the introduction of compulsory vaccination into the Bangalore City and Government Proceedings No. 3049-68—Legis. 21-05, dated the 1st May 1906 on the same subject.

4. Letter No. 2149—C. P. S., dated the 24th April 1906, from the Superintending Engineer, Western Circle, requesting to be informed if there is any objection to the continuance of shutting down street electric lights on moonlight nights as it has been in successful operation for the past three months.

5. Government Preceedings No. 11206-7—Ml. (186-04)-4, dated the 30th April 1904, declining to meet the cost of constructing bathing ghats in the Kempambudhi tank from General Revenues.

A. S. NAGAVKAR, *President.*

MYSORE CITY MUNICIPALITY.

Notice dated 2nd May 1906.

Sealed tenders will be received by the undersigned up to 2 P. M. on Friday the 18th May 1906, for the supply of Kerosene oil as noted below for the Municipal lamps in the City of Mysore for a period of one year commencing from the 1st of July 1906.

Each tender must specify the rate per tin of the oil and it must be superscribed "Tender for the supply of Kerosene oil for the Municipal lamps in the City of Mysore" and addressed to the Vice-President, City Municipality Mysore. It must be accompanied by a deposit of Rs. 50 either in cash or currency note and it must reach the Vice-President on or before the 18th May 1906.

Tenders will be opened by the President or the Vice-President in the Town Hall at 2 P. M. on Friday the 18th May 1906, in presence of the tenderers who are present. The deposit of the tenderer whose tender is accepted will be retained.

The President or the Vice-President reserves to himself the right of rejecting the lowest or any tender without assigning any reason for so doing.

The successful tenderer must execute a mutchalika and furnish a further deposit of Rs. 150 within five days after the acceptance of his tender has been announced to him, failing which he shall forfeit his deposit.

Terms of mutchalika and other particulars will be obtained in the Municipal office.

N. B.—(1) Every month about 200 tins of Chester or Standard Brand Kerosene oil may be required for the Municipal lamps.

(2) About 100 tins of Russian Kerosene oil may be required for the whole year.

C. VENCAT RAO, for *President.*

MYSORE CITY IMPROVEMENT TRUST BOARD.

PROCEEDINGS OF AN ORDINARY MEETING OF THE BOARD OF TRUSTEES, FOR THE IMPROVEMENTS OF THE CITY OF MYSORE, HELD AT THE CHAIRMAN'S OFFICE, ON WEDNESDAY THE 28TH MARCH 1906.

Mr. D. Sitarama Rao, Chairman.

Trustees.

PRESENT.

E. Maconochie, Esq., I.C.S.
Dr. P. S. Achyuta Rao.
Mr. C. Venkata Rao.
" Mohamed Jaffer Saheb.
" M. Anantharajaiya.
" M. Venkatakrishnaiya.
" M. C. Ranga Iyengar.

ABSENT.
Nil.

Subject.

I. Application dated 16th January 1906, from Sister Marie, Lady Superioress, Good Shepherd Convent, Mysore, for the land to the east of the Convent in Paracherry.

Resolution.

Resolved that the area in question, *viz.*, 936 sq. yards, may be sold to Sister Marie, Lady Superioress of the Good Shepherd Convent, at the rate charged for similar sites in the neighbourhood, *viz.*, 4 annas per sq. yard, on the understanding that no buildings will be erected on it before the expiry of the current calendar year.

II. Government Proceedings No. 9645-7—Ml. 455-05-3 of the 17th March 1906, forwarding for report through the Chief Engineer, Deputy Commissioner's letter No. 872 of 26th February 1906, containing his views as to the works to be undertaken by the Trust Board in preference to the projects formulated and now being carried out.

Read Deputy Commissioner's letter No. 872 of 26th February 1906, forwarded under Government Proceedings No. 9645-7—Ml. 455-05-3 of the 17th March 1906. Resolved that the Board are always prepared to welcome criticism from the Deputy Commissioner of the works and measures executed by them; but they believe that in the present instance, the Deputy Commissioner's remarks are misdirected. The Chairman is requested to report to Government how matters actually stand, with reference to the questions raised by the Deputy Commissioner.

III. Government Proceedings No 8909-11—Ml. (322-05)-4 of the 28th February 1906, ordering the reversion from 1st March 1906 of the conservancy establishment in the areas under the operations of the Trust Board to the control of the Trust Board.

Resolved that the Chairman be requested to intimate to Government that, in the opinion of the Board, the retransfer of the conservancy establishment is undesirable, as the officers of the Board are fully occupied with their legitimate duties and cannot attend to the conservancy. With reference to the question of imposing a scavenging cess, the Board is not aware of any provision of the law enabling it to impose such a cess.

IV. Government Proceedings No. 8912-14—Ml. 274-05 of the 28th February 1906, regarding the cost of additional temporary conservancy establishment employed by the Municipal and Trust Boards.

Read and recorded.

D. SITARAM RAO,
Chairman.

MORTUARY REGISTER.

FOR THE WEEK ENDING 23RD MARCH 1906.

Bangalore City.

Estimated population according to the Census of 1901. { Males ... 35,964; Females ... 33,483 } Total ... 69,447

Diseases	M.	F.	Total
Plague	5	5	10
Cholera ...	...	...	...
Small-pox	1	1	2
Fevers	3	2	5
Bowel-complaints ...	3	5	8
Suicide	...	...	...
Wounding	...	...	...
Accident	...	...	...
Snake-bite or killed by wild beasts	...	...	...
All other causes ...	23	34	57
Tota ..	35	47	82
Births during the week ...	11	8	19

Mysore City.

Estimated population according to the Census of 1901. { Males ... 34,328; Females ... 33,783 } Total .. 68,111

Diseases	M.	F.	Total
Plague	...	...	...
Cholera	.	...	...
Small-pox	...	...	...
Fevers	...	4	4
Bowel-complaints ...	...	2	2
Suicide	...	...	...
Wounding	...	...	...
Accident	1	...	1
Snake-bite or killed by wild beasts	...	...	...
All other causes ..	17	13	30
Total ...	18	19	37
Births during the week ..	15	12	27

FOR THE WEEK ENDING 30TH MARCH 1906.

Diseases	M.	F.	Total	Diseases	M.	F.	Total
Plague	5	2	7	Plague	...	...	...
Cholera	...	...	...	Cholera	...	...	...
Small-pox ...	4	...	4	Small-pox	...	...	...
Fevers	2	3	5	Fevers	1	1	2
Bowel-complaints ...	4	4	8	Bowel-complaints ...	1	4	5
Suicide	...	...	...	Suicide	...	...	...
Wounding	...	...	...	Wounding	...	...	...
Accident	...	...	...	Accident ..	...	...	...
Snake-bite or killed by wild beasts		...	...	Snake-bite or killed by wild beasts ...	...	...	...
All other causes ...	24	33	57	All other causes ..	10	11	21
Total ...	39	42	81	Total ...	12	16	28
Births during the week ...	16	11	27	Births during the week ...	14	14	28

FOR THE WEEK ENDING 6TH APRIL 1906.

Diseases	M.	F.	Total.	Diseases	M.	F.	Total.
Plague	5	2	7	Plague	...	...	...
Cholera	...	...	...	Cholera	...	...	..
Small-pox	3	4	7	Small-pox	...	1	1
Fevers	3	6	9	Fevers	2	2	4
Bowel-complaints ...	2	4	6	Bowel-complaints ..	5	1	6
Suicide	..	...	...	Suicide	...	...	...
Wounding	...	...	...	Wounding	1	...	1
Accident	..	...	..	Accident	...	...	...
Snake-bite or killed by wild beasts.	...	...	...	Snake-bite or killed by wild beasts.	...	...	...
All other causes ...	21	28	49	All other causes ...	17	12	29
Total ..	34	44	78	Total ...	25	16	41
Births during the week .	21	14	35	Births during the week ..	14	13	27

FOR THE WEEK ENDING 13TH APRIL 1906.

Diseases	M.	F.	Total	Diseases	M.	F.	Total
Plague	4	3	7	Plague	...	...	...
Cholera	...	...	..	Cholera ...	...	...	...
Small-pox ...	1	2	3	Small-pox	...	...	...
Fevers ...	1	1	2	Fevers	2	1	3
Bowel-complaints ...	6	1	7	Bowel-complaints ...	3	2	5
Suicide	...	...	...	Suicide ...	...	...	...
Wounding	...	...	...	Wounding	..	...	...
Accident	...	5	5	Accident	...	...	...
Snake-bite or killed by wild beasts	...	...	...	Snake-bite or killed by wild beasts	...	...	...
All other causes ...	28	22	50	All other causes ...	10	10	20
Total ...	40	34	74	Total ...	15	13	28
Births during the week ...	10	13	23	Births during the week ...	13	9	22

By Order,

P. PALPU, L.M.S., D.P.H.,

Personal Asst. to the Senior Surgeon and Sany. Comr. with the Govt. of Mysore.

OFFICE OF THE COMPILER "MYSORE GAZETTE."

NOTICE.

RATES FOR CIVIL COURT, &c., NOTICES.

Particulars	1st insertion		2nd and subsequent insertion	
	Rs.	a.	Rs.	a.
Notices by Civil Courts of Applications for Certificates under Act XXVII of 1860	2	8	1	4
Notices by Civil Courts of Insolvency Application under Section 347 of Civil Procedure Code	5	0	2	8
Insolvency Orders issued by the Civil Courts under Section 354 of the Civil Procedure Code	*Free.*			
Notices issued by Revenue Officers for the grant of duplicate coffee pattas, &c. ... ... per page...	10	0	5	0

RATES FOR PRIVATE ADVERTISEMENTS.

1st insertion As. 8, 2nd insertion As. 6, and 3rd and subsequent insertions As. 4 per line. When Postage labels are sent in payment of subscription, etc., one anna extra per rupee should be added.

NOTICE.

No. 1.—The *Mysore Gazette* is published at Bangalore every Thursday. Application for the supply of the Gazette on *Public Service* should be addressed to the Secretary to the Government of Mysore, General and Revenue Department. Postage is not charged for places within the Mysore Province. All subscriptions and advertisement charges are payable *in advance.*

No. 2.—It is hereby notified that, as Government Treasuries in Mysore are authorized to receive and credit Gazette subscriptions as well as publication charges remitted by Courts, all such moneys should be sent to Treasuries and only Treasury receipts forwarded to this office. No money orders will be received by the undersigned except from outside the Province.

Charges of private advertisements must be forwarded to this office.

No. 3.—Much inconvenience is caused in this office by subscribers not giving their full and correct addresses, and writing illegibly on the money order coupons, which are unfit for record.

No. 4.—Communications on post-cards or on paper less than half a sheet of foolscap will not receive attention.

No. 5.—An efficient system of check and counter-check is maintained over the despatching of Gazette copies forwarded through Post. No responsibility will be accepted when copies miscarry, or are not delivered to addressees, and such losses will not be replaced by duplicate copies.

No. 6.—Complaints regarding non-receipt of the Gazette should be forwarded to the undersigned within a week after the date on which it is due.

No. 7.—Copy is sometimes sent to the Press late on Wednesday evenings for publication in the next day's Gazette. This involves considerable inconvenience to the Press and expense to Government. It is therefore notified that all matter intended for publication in Parts II, III and IV should reach this office not later than Tuesday evening; and that for Part I not later than the forenoon of Wednesday, for the following Thursday's issue of the Gazette.

No. 8.—It is requested that Departments will refrain from sending to the Press any matter for publication as extremely urgent later than 12 noon on Tuesdays, when such matter can without inconvenience be held over for the next week's Gazette.

No. 9.—Spare copies of notifications, etc., are often asked for long after their publication when the matter has been broken up, necessitating its resetting, causing inconvenience to the Press and waste of money. It is therefore requested that when spare copies are wanted, a note to that effect, stating the number of copies, be made at foot of such notification, etc.

No. 10.—If no instructions, either at foot of notifications, or separately by docket, accompany any matter, it will be printed in the language in which it is written, and published only once.

C. H. YATES,
Compiler, Mysore Gazette.

MYSORE GOVERNMENT METEOROLOGICAL DEPARTMENT.

Daily Means of Observations for the Week Sunday 22nd to Saturday 28th April 1906.

No.	BANGALORE	Sunday 22	Monday 23	Tuesday 24	Wednesday 25	Thursday 26	Friday 27	Saturday 28
1	Barometer red. to 32° F.	26·907	26·881	26·890	26·899	26·882	26·875	26·857
2	Daily Barometric range	·136	·125	·127	·101	·133	·129	·140
3	Mean Dry Temperature in shade	83·7	84·7	84·1	83·4	82·0	82·8	83·7
4	Maximum do	96·5	97·7	97·0	97·0	97·3	[illegible]	97·7
5	Minimum do	71·8	72·5	72·0	[illegible]	68·5	71·6	70·8
6	Daily range of do	24·7	25·2	25·0	26·5	28·8	25·6	26·9
7	Mean Wet Temperature in shade	68·9	68·0	68·3	64·8	63·2	66·6	66·3
8	Minimum do	64·2	63·4	62·9	62·8	59·7	60·2	61·5
9	Pressure of Aqueous Vapour	·598	·560	·573	·385	·414	·568	·513
10	Humidity	52	50	50	32	38	52	46
11	Wind Vely. in Miles p. day to 8 A. M	177	167	182	163	211	205	168
12	Mean Wind Direction	S b W	S S E	S W	S E	E S E	S b E	S b E
13	Rainfall in inches to 8 A.M.	0	0	0	0	0	0	0
14	Total Rainfall from 1st January	1·73	1·73	1·73	1·73	1·73	1·73	1·73
15	Per cent of Cloudy Sky	33	10	10	0	13	53	0
16	Character of Weather	Fine	Fine	Distant lightning	Distant lightning	Fine	Fine	Fine clear

461

MYSORE GOVERNMENT METEOROLOGICAL DEPARTMENT.

Daily Means of Observations for the Week Sunday 22nd to Saturday 28th April 1906.

No.	MYSORE	Sunday 22	Monday 23	Tuesday 24	Wednesday 25	Thursday 26	Friday 27	Saturday 28
1	Barometer red. to 32° F.	27·368	27·355	27·370	27·361	27·349	27·347	27·340
2	Daily Barometric range	·152	·151	·157	·156	·150	·145	·141
3	Mean Dry Temperature in shade	85·8	85·8	83·0	85·2	85·3	83·2	83·9
4	Maximum do	100·0	99·5	96·7	99·1	100·0	96·0	97·0
5	Minimum do	72·6	72·2	69·8	72·1	71·5	72·5	71·7
6	Daily range of do	27·4	27·3	26·9	27·0	28·5	23·5	25·3
7	Mean Wet Temperature in shade	70·4	70·8	70·7	68·9	67·0	69·0	68·9
8	Minimum do	65·0	67·9	66·5	66·0	64·7	65·0	65·0
9	Pressure of Aqueous Vapour	·633	·600	·633	·575	·479	·606	·576
10	Humidity	51	51	55	51	42	52	48
11	Wind Vely. in Miles p. day to 8 A.M.	258	276	221	182	191	269	198
12	Mean Wind Direction	N W b N	S b E	S W b S	S b E	S E b S	S b E	F S E
13	Rainfall in inches to 8 A.M.	0	0	0·02	0	0	0	0
14	Total Rainfall from 1st January	0·83	0·83	0.85	0·85	0·85	0·85	0·85
15	Per cent of Cloudy Sky	27	23	57	10	100	83	27
16	Character of Weather	Fine passing clouds	Fine passing clouds	Distant thunder	Fine passing clouds	Cloudy	Cloudy	Fine passing clouds

MYSORE GOVERNMENT METEOROLOGICAL DEPARTMENT.

Daily Means of Observations for the Week Sunday 22nd to Saturday 28th April 1906.

No.	HASSAN	Sunday 22	Monday 23	Tuesday 24	Wednesday 25	Thursday 26	Friday 27	Saturday 28
1	Barometer red. to 32° F.	26·850	26·832	26·834	26·832	26·814	26·813	26·805
2	Daily Barometric range	·141	·114	·133	·121	·128	·126	·124
3	Mean Dry Temperature in shade	82·4	80·6	82·0	82·6	82·4	81·1	80·5
4	Maximum do	97·2	98·7	96·8	98·7	98·8	96·7	97·4
5	Minimum do	69·9	69·5	68·6	69·3	66·8	66·8	64·0
6	Daily range of do	27·3	29·2	28·2	29·4	32·0	29·9	33·4
7	Mean Wet Temperature in shade	70·5	70·5	69·5	67·5	66·8	6[illegible]·2	67·5
8	Minimum do	66·9	67·9	66·9	65·0	63·8	65·1	65·3
9	Pressure of Aqueous Vapour	·608	·628	·565	·496	·485	·557	·506
10	Humidity	51	56	48	39	42	53	43
11	Wind Vely. in Miles p. day to 8 A.M.	88	76	88	49	62	70	72
12	Mean Wind Direction	W b S	W b S	S W b S	S E b E	S	S	S b E
13	Rainfall in inches to 8 A. M.	0	0	0	0	0	0	0
14	Total Rainfall from 1st January	0·03	0·03	0·03	0·03	0·03	0·03	0·03
15	Per cent of Cloudy Sky	40	33	33	27	53	70	17
16	Character of Weather	Fine; sultry	Distant thunder and lightning	Fine; sultry	Fine; sultry	Dust-storm	Dust-storm	Fine; sultry

1463

MYSORE GOVERNMENT METEOROLOGICAL DEPARTMENT.

Daily Means of Observations for the Week Sunday 22nd to Saturday 28th April 1906.

No.	CHITALDRUG	Sunday 22	Monday 23	Tuesday 24	Wednesday 25	Thursday 26	Friday 27	Saturday 28
1	Barometer red. to 32° F.	27·477	27·445	27·459	27·460	27·439	27·440	27·432
2	Daily Barometric range	·147	·138	·137	·129	·146	·136	·150
3	Mean Dry Temperature in shade	84·8	85·5	86·9	88·4	88·4	85·3	86·4
4	Maximum do	99·2	99·6	100·2	102·0	101·6	99·8	100·5
5	Minimum do	72·0	74·2	75·3	75·6	76·3	72·1	73·0
6	Daily range of do	27·2	25·4	24·9	26·4	25·3	27·7	27·5
7	Mean Wet Temperature in shade	68·8	70·8	71·5	69·7	67·7	68·5	69·8
8	Minimum do	63·1	68·1	69·7	66·0	63·8	61·8	64·2
9	Pressure of Aqueous Vapour	·551	·609	·600	·511	·480	·575	·605
10	Humidity	47	49	46	35	35	44	48
11	Wind Vely. in Miles p. day to 8 A. M.	171	133	158	100	136	171	129
12	Mean Wind Direction	S b E	S W b S	S S E	S b W	N N E	S S W	S W b W
13	Rainfall in inches to 8 A. M.	0	0	0	0	0	0	0
14	Total Rainfall from 1st January	1·24	1·24	1·24	1·24	1·24	1·24	1·24
15	Per cent of Cloudy Sky	20	13	10	7	0	57	3
16	Character of Weather	Fine; sultry	Fine; dust haze	Dust-storm	Fine clear; sultry	Fine clear; sultry	Fine clear	Sultry

Dated 4th May 1906.

N. VENKATESAIENGAR, for *Director of Meteorology.*

464

Abstract Statement of Plague Cases and Deaths in the Mysore Province for the week ending Friday the 4th May 1906.

Place	During the week ending 4th May 1906		During the week ending 27th April 1906		Figures for the corresponding week of last year		Number of infected villages
	Attacks	Deaths	Attacks	Deaths	Attacks	Deaths	
Bangalore City	...	...	3	2	6	4	...
Mysore City	...	...	...	...	...	...	...
Bangalore District	...	...	1	1	4	5	1
Mysore District	...	...	...	...	...	...	...
Kolar District (excluding Gold Fields)	...	...	...	...	...	...	...
Kolar Gold Fields	...	...	1	2	...	...	2
Tumkur District	...	...	...	...	1	1	...
Hassan District	...	...	...	...	...	...	...
Chitaldrug District ...	1	1	...	...	...	...	1
Kadur District	...	...	...	...	...	...	...
Shimoga District	...	...	...	...	...	...	...
Total ...	1	1	5	5	11	10	4

P. PALPU, L.M.S., D.P.H.,
for *Offg. Sr. Surgn. & Sany. Comr., M. G.*

466

The Mysore Gazette.

VOL. 41.] PUBLISHED BY AUTHORITY. [No. 19.

BANGALORE, THURSDAY, MAY 10, 1906.

PART IV.

OFFICIAL PAPERS.

Season Report for the Week ending with the 18*th Saturday in* 1906 (5*th May* 1906).

District and Station.	Rainfall up to 8 A.M. on Saturday.					Price of food grains in seers per rupee and market fluctuations in prices of food grains.			
	This week.	Last ten years' average for the corresponding week.	Up to the end of the week from 1st January 1906.						
			This year.	Average of past ten years.	Excess (+) or defect (—) of column 4 compared with column 5.				
1	2	3	4	5	6	7			
	I. c.	I. c.	I. c.	I. c.	I. c.		This week.	Past week.	Past ten years' fortnightly average.
							Seers	Seers.	Seers.
BANGALORE.									
Bangalore C. & M. Station ...	... ...	... ...	... ..	.. ...	.. ..				
" City & Taluk...	... ..	... 33	1 89	2 44	— 0 55	Rice, 2nd sort.	6·50	7·00	9·36
Hoskote ...	... ...	... 27	.. 57	2 46	— 1 89				
Dodballapur ...	... ...	... 51	... 43	3 15	— 2 72	Ragi	17·00	17·50	23·10
Nelamangala ...	... ...	... 72	. 73	2 51	— 1 78	Kulthi	12·00	12·25	...
Kankanhalli ...	.. .	... 74	... 90	2 88	— 1 98	Kadale	8·00	8·00	10·20
Magadi ...	.. ..	.. 32	.. ...	1 97	— 1 97				
Channapatna ...	... ..	... 24	. 37	3 1	— 2 64				
Anekal ...	.. ..	... 18	2 24	2 68	— 0 44				
Devanhalli ...	... ...	... 20	... 52	2 79	— 2 27				
Closepet ...	.. ...	... 35	... 82	2 31	— 1 49				
District average...	... ...	... 39	. 85	2 62	— 1 77				
KOLAR.									
Kolar ...	... ...	... 39	... 55	2 44	— 1 89				
Bowringpet ...	... ...	.. 46	... 45	2 24	— 1 79	Rice, 2nd sort.	7·00	7·25	9·25
Chintamani ...	... ...	.. 19	1 ...	1 32	— 0 32				
Mulbagal ...	... ...	... 66	1 99	2 62	— 0 63	Ragi	17·00	18·00	23·90
Sidlaghatta ...	... ...	... 52	... 36	1 64	— 1 28	Kulthi	14·00	14·00	...
Chikballapur ...	.. ..	... 39	2 44	3 27	— 0 83	Kadale	9·00	9·00	9·10
Bagepalli ...	... ...	... 21	1 20	1 3	+ 0 17				
Goribidnur ...	... ..	... 26	... 60	1 38	— 0 78				
Malur ...	.. ...	.. 70	1 34	2 42	— 1 8				
Srinivaspur ...	... ...	... 9	1 88	2 4	— 0 16				
Gudibanda ...	... ...	... 28	... 73	1 27	— 0 54				
District average...	... ...	.. 38	1 14	1 97	— 0 83				
TUMKUR.									
Tumkur ...	... ...	... 71	1 20	2 30	— 1 10				
Maddagiri ...	... ...	... 14	... 28	1 26	— 0 98				
Chiknayakanhalli ..	... ...	... 39	1 40	2 10	— 0 70	Rice, 2nd sort.	7·50	7·50	9·20
Sira ...	... ...	... 39	1 37	1 72	— 0 35				
Gubbi ...	...	... 56	.. 36	1 56	— 1 20	Ragi	16·00	16·00	26·10
Tiptur ...	... ...	... 90	... 20	2 15	— 1 95	Kulthi	12·00	12·00	...
Pavagada ...	... ...	.. 12	... ..	1 18	— 1 18	Kadale	8·00	8·00	9·35
Kunigal ...	... ...	.. 45	.. 44	1 34	— 0 90				
Koratagere ...	... ...	... 26	1 10	1 27	— 0 17				
Turuvekere ...	... ...	... 32	... 57	1 51	— 0 94				
District average...	... ...	... 42	... 69	1 64	— 0 95				

District and Station.	Rainfall up to 8 A. M. on Saturday. This week.		Last ten years' average for the corresponding week.		Up to the end of the week from 1st January 1906. This year.		Average of past ten years.		Excess (+) or defect (—) of column 4 compared with column 5.		Price of food grains in seers per rupee and market fluctuations in prices of food grains.			
1	2		3		4		5		6		7			
	I.	c.	I.	c.	I.	c.	I.	c.	I.	c.		This week. Seers.	Past week. Seers.	Past ten years' fortnightly average. Seers.
MYSORE.														
Mysore	...	6	...	85	2	47	2	59	—0	12				
Chamrajnagar	...	17	1	3	...	22	4	21	—3	99				
Seringapatam	...	...	...	66	...	71	2	75	—2	4	Rice, 2nd sort.	8·00	8·00	10·36
Hunsur	...	37	...	63	...	49	2	96	—2	47	Ragi	14·00	14·00	21·43
Yedatore	...	50	...	79	1	93	2	86	—0	93	Kulthi	12·50	12·50	...
Heggaddevankote	...	...	1	20	..	...	7	89	—7	89	Kadale	9·50	9·50	10·24
Gundlupet	...	8	...	71	1	71	3	85	—2	14				
Nanjangud	...	20	...	87	1	25	3	39	—2	14				
T.-Narsipur	...	...	..	85	...	98	3	33	—2	35				
Malvalli	...	..	...	27	...	67	2	14	—1	47				
Mandya	...	..	...	74	2	9	2	9	..	..				
Krishnarajpete	...	...	..	53	1	85	2	53	—0	68				
Nagamangala	...	..	...	78	1	38	2	30	—0	92				
District average...	...	11	...	76	1	21	3	30	—2	9				
HASSAN.														
Hassan	...	26	...	85	...	35	2	95	—2	60				
Manjarabad (Saklespur)	..	21	...	65	1	8	3	34	—2	26				
Arkalgud	...	10	...	45	2	70	2	60	+0	10				
Belur	...	51	...	95	2		3	84	—1	80	Rice, 2nd sort.	8·00	8·00	10·50
Channarayapatna	...	...	...	51	1	10	2	32	—1	22				
Arsikere	...	..	...	48	...	...	2	28	—2	28	Ragi	16·00	16·00	24·86
Hole-Narsipur	...	..	...	38	1	19	2	40	—1	27	Kulthi	12·00	11·50	...
Alur	..	9	...	75	..	14	3	[illegible]	—2	91	Kadale	9·00	9·00	10·15
District average...	...	15	...	63	1	7	2	75	—1	68				
SHIMOGA.														
Shimoga	...	..	...	68	...	94	2	77	—1	83				
Channagiri	...	..	..	72	...	20	1	73	—1	58	Rice, 2nd sort	8·00	8·50	12·24
Honnali	...	..	...	44	1	20	2	53	—1	38				
Shikarpur	...	..	...	54	...	...	2	33	—2	33	Ragi	14·75	14·75	30·37
Sorab	...	...	..	43	..	43	1	99	—1	56	Kulthi	11·50	11·50	...
Sagar	...	40	...	34	2	29	1	93	+0	36				
Nagar (Kallurkatte)	...	10	...	23	...	66	1	57	—0	91				
Tirthahalli	...	...	...	35	1	15	2	12	—1	7				
Kumsi	..	...	..	38	...	16	2	96	—2	10				
District average...	...	5	..	46	...	78	2	16	—1	38				
KADUR.														
Chikmagalur	..	25	..	74	1	87	3	30	—1	43				
Kadur	...	19	...	51	...	19	2	28	—2	9	Rice, 2nd sort	7·50	7·50	10·60
Tarikere	...	...	...	82	...	76	3	21	—2	45				
Koppa	...	...	..	33	2	69	2	77	—0	8	Ragi	15·00	15·00	23·60
Mudgere	...	63	..	60	1	28	4	..	—2	72	Kulthi	10·00	11·00	...
Yedahalli	...	...	.	59	...	40	3	8	—2	68	Kadale	8·00	8·00	9·90
Sringeri	..	...	...	29	1	3	2	93	—1	90				
District average ..	...	15	...	55	1	17	3	8	—1	91				
CHITALDRUG.														
Chitaldrug	...	...	...	37	1	22	1	46	—0	24				
Challakere	...	..	..	57	...	8	1	96	—1	88	Rice, 2nd sort	7·50	7·50	10·60
Hiriyur	..	..	...	40	...	19	1	47	—1	28				
Holalkere	...	..	.	22	...	20	2	22	—2	2	Ragi	15·00	14·00	27·60
Davangere	...	...	..	23	...	41	1	48	—1	7	Kulthi	11·00	11·00	...
Molakalmuru	...	...	...	67	...	44	1	29	—0	85	Cholum	14·00	12·00	24·30
Jagalur	...	...	...	21	...	52	1	55	—1	3	Kadale	7·00	8·00	10·60
Hosdurga	..	...	..	28	...	31	1	12	—0	91				
Harihar	..	...	..	79	2	94	1	83	+1	32				
District average...	..	...	...	41	...	70	1	57	—0	87				
Provincial average...	...	6	...	50	...	95	2	38	—1	43				

Note—Rice (husked)—Oryza Sativa.
Ragi—Eleusine Corocana.
Kulthi—(Horse gram) Dolichos Biflorus.
Cholum—Sorghum Vulgare.
Kadale—(Bengal gram) Ciser Arietinum.

DISTRICT REPORTS.

8. Markets how supplied.
9. Progress of agricultural operations, state of standing crops, prospects and probable outturn of harvests, serious damage done to crops by insects or other natural calamities.
10. Prospects of season, tracts in which the rainfall has been insufficient, areas affected by scarcity, number of people under relief, and state of food stocks.
11. Public health.
12. Remarks as to the condition of agricultural stock, failure of pasturage, of fodder, etc.

BANGALORE CIVIL AND MILITARY STATION.

		Normal.	*Current.*	
Prices of food grains—	Rice	... 10 to 11	6½ to 7	seers per rupee.
	Ragi	... 25 to 30	16 to 17	

Manure is being collected.
Cattle are in good condition.
Water and fodder sufficient.

BANGALORE CITY AND TALUKS.

8. Market well supplied.

9. Standing crops are in good condition. Sugar-cane is harvested in some parts of Bangalore, Dodballapur and Channapatna. The outturn of this crop is reported to be good. Agricultural operations are at a stand-still for want of rains.

10. Prospects of the season depend on the expected rains. Want of rain is felt throughout.

11. Public health generally good.

12. Cattle healthy. Water and dry fodder are available. In (7+22+1+2) or 32 villages of Hoskote, Kankanhalli, Nelamangala and Anekal temporary wells are reported to have been sunk in beds of dried tanks.

KOLAR.

8. Market well supplied, but prices are very high.

9. Sugar-cane is being planted in Bowringpet, Chintamani and Sidlaghatta. Vaisakhi paddy is being sown in Goribidnur under kapile wells. Sugar-cane in Chintamani and paddy in Sidlaghatta, Bagepalli and Gudibanda are being harvested.

10. The long expected mungar rains are still withholding. Food stocks are available.

11. Public health generally good.

12. Cattle generally in good condition, but in parts of Bagepalli and Gudibanda they are reported to be suffering from foot and mouth disease and also from some kind of eruption like small-pox in the former taluk. Pasture in fields and grazing lands has been completely exhausted. Difficulty for water for men and cattle is gradually increasing.

TUMKUR.

8 Market well supplied.

9. Paddy in Maddagiri, Chiknayakanhalli, Sira, Pavagada, Koratagere and Turuvekere, cholum in Sira, sugar-cane in Gubbi and Kunigal and cotton in Pavagada are being harvested. Sugar-cane in Maddagiri and Koratagere and nat-ragi in Pavagada are being sown. Standing Vaisakhi paddy and sugar-cane crops in Maddagiri, Sira, Pavagada, Kunigal and Koratagere are in fair condition. Elsewhere they are withering for want of water. The following is the estimated outturn of crops harvested :—

Maddagiri—Paddy 12 annas.
Chiknayakanhalli—Paddy 2 to 4 annas.
Sira—Paddy 4 to 8 annas, cholum 2 to 4 annas.
Gubbi—Sugar-cane 2 annas.
Koratagere—Paddy 4 to 12 annas.
Pavagada—Paddy 4 annas, cotton 2 annas.
Turuvekere—Paddy 8 annas.

10. Prospects of the season not encouraging. Food stocks are available for the present. Supply of water in wells is diminishing. Mungar rains are anxiously awaited. Some irrigation wells were started in the Maddagiri Taluk by landholders, and they afford labour and handsome wages to the people of those parts. Hence test-works intended to be started are deferred.

11. Public health generally good, except that small-pox prevails in parts of Tiptur, Kunigal and Turuvekere. It is reported that it is subsiding in Gubbi.

12. Cattle are just beginning to decline in condition. Foot and mouth disease prevails in parts of Kunigal and Turuvekere. In parts of Gubbi, Tiptur, Turuvekere, Chiknayakanhalli and Sira date leaves are used as fodder for cattle. Cholum and kadale pretty extensively cultivated in tank-beds provided some fodder for cattle. Temporary wells are being constructed in tank-beds, as also drinking water wells all over the district. Water in State Forests is made available wherever needed.

MYSORE.

8. Market well supplied.

9. Standing sugar-cane in Seringapatam, and Krishnarajpete mulberry and sugar-cane in T.-Narsipur and Malvalli and cotton, sugar-cane and mulberry in Chamrajnagar are reported to be fair. Cholum sown in parts of Mysore, mulberry planted in parts of Malvalli, and sugar-cane sown under tanks in parts of Nagamangala are reported to be withering for want

of rain. Lands have been made ready for sowing in all parts and rains are anxiously awaited. The probable outturn of crops is estimated as follows :—

T.-Narsipur—Sugar-cane and mulberry 12 annas.

Krishnarajpete—Sugar-cane, black and green grams 8 annas.

10. Prospects of the season not good. The condition of things has in no way improved by the rainfall during the week. Food stocks are reported to be small.

11. Public health generally good, but small-pox is still reported to be prevailing in Heggaddevankote.

12. Cattle in parts of Heggaddevankote and Malvalli are reported to be suffering from foot and mouth disease. In other parts they are healthy. Fodder is available only in limited quantities, and difficulty for water for men and cattle considerably felt in most parts of the district.

HASSAN.

8. Market fairly well supplied, but prices increasing.

9. Standing crops, *viz.*, sugar-cane in Hassan, Belur, Arsikere, Channarayapatna, Hole-Narsipur and Alur ; paddy in Arsikere and Manjarabad and kar-paddy in Hassan, are reported to be fading for want of rain. Black and green grams and tadagani in Hole-Narsipur are reported to be in fair condition. The probable outturn of standing crops in Hole-Narsipur is estimated at 8 annas. Agricultural operations are delayed for want of rains, but in parts of Arkalgud Taluk seeds are being sown.

10. Prospects of the season not encouraging owing to the Mungar rains having held off till now. Food stocks are sufficient for the present. Rain is very badly needed throughout.

11. Public health generally good, but small-pox is reported to be still existing in several parts.

12. Cattle generally healthy, but for foot and mouth disease which still prevails in parts of Arsikere, Channarayapatna, Arkalgud, Manjarabad, Hole-Narsipur and Belur, as also the disease known as "*Metrigattu*" in parts of Arkalgud. Fodder and water generally available, except in parts of Channarayapatna and Arsikere, where difficulty is felt for want of both.

SHIMOGA.

8. Market well supplied. Prices high.

9. Kar-paddy under the Sulekere tank in Channagiri and in the Taluks of Sagar and Nagar and sugar-cane in Sagar and Nagar are in a fair condition in areas where water is still available. Elsewhere sugar-cane and kar-paddy are withering. Efforts are being made in the Shimoga Taluk to preserve the sugar cane plants by lifting water from water pits dug up for the purpose and from the river. Paddy seedlings are being raised in some parts of Tirthahalli. The ground is being ploughed and manure collected in some parts of Nagar and Sorab.

10. Food stocks are reported to be somewhat insufficient in parts of Shimoga, Shikarpur, Sorab and Kumsi. Rain is anxiously awaited everywhere.

11. Public health is generally good. Small-pox prevails in parts of Shimoga, Channagiri, Sagar and Tirthahalli, and fever in parts of Kumsi.

12. Scarcity of water is on the increase in all taluks. Fodder supply is limited everywhere except in Sagar, Nagar and Tirthahalli.

KADUR.

8. Market fairly well supplied.

9. Ploughing is carried on in parts of Koppa. Sugar-cane is being planted in Tarikere and kar-paddy is being sown in parts of Mudgere. The standing crops of sugar-cane in parts of Tarikere and Yedahalli ; kar-paddy in parts of Mudgere and Koppa, and kar-paddy and sugar-cane in parts of Kadur and Chikmagalur are in fairly good condition. Kar-paddy and sugar-cane are being harvested in Kadur. Ploughing and other agricultural operations are delayed for want of rain. Arecanut gardens in parts of Malnad Taluks require water. The probable outturn of kar-paddy and sugar-cane in Kadur are respectively from 2 to 8 and from 8 to 12 annas.

10. Prospects of the season not encouraging. Rain is badly needed throughout. Food stocks are available and sufficient for the present.

11. Public health generally good, except that small-pox prevails in parts of Chikmagalur, Mudgere and Koppa.

12. Foot and mouth disease to cattle is reported to be subsiding. Water and fodder are generally available, but water-supply is scanty in parts of Chikmagalur, Kadur, Yedahalli and Tarikere.

CHITALDRUG.

8. Market well supplied.

9. The estimated outturn of crops harvested during the week is as follows :—

Chitaldrug—Sugar-cane 8 annas.

Holalkere—Paddy under kapile wells 8 annas.

Davangere—Sugar-cane 4 annas.

It is reported that lands in Harihar have been made ready for sowing.

10. Prospects of the season fair. Food stocks available.

11. Public health good.

12. Cattle healthy. Water and fodder procurable in limited quantities.

BANGALORE,
9th May 1906.

B. K. VENKATA VARADA IYENGAR,
Secy. to the Govt. of H. H. the Maharaja of Mysore, Gen. & Rev. Dept.

CALENDAR FOR MAY 1906.

ಶನಿವಾರ	5	,,	9	$10\frac{1}{2}$	,,	ಶನಿವಾರ	5	,,	$6\frac{1}{2}$	,,	$7\frac{1}{2}$,,

GOVERNMENT HOLIDAYS.—ಸರ್ಕಾರದ ರಜಾ ದಿವಸಗಳು.

H. 5th Sri Sankaracharyara Aradhana. — ಶ್ರೀ ಶಂಕರಾಚಾರ್ಯರ ಆರಾಧನೆ.
C. 24th Ascensionday. — ಅಸೆಂಷನ್‌ಡೆ.

MYSORE GAZETTE OFFICE,
BANGALORE.

C. H. YATES,
Compiler, Mysore Gazette.

Govt. Press, Bangalore—1906.

THE
MYSORE GAZETTE.

CALENDAR FOR MAY 1906.

THURSDAY,
10th May 1906.

Kanarese year—
Parabhava.

ಚಾಂದ್ರಮಾನ ವರುಷ—
ಪರಾಭವ.

1906ನೆ ಇಸವಿ ಮೇ ಮಾಹೆ ಪಂಚಾಂಗ.

Date of the Month. ತಾರೀಖು.	Days of the Week. ವಾರಗಳ ಹೆಸರು.		Kanarese. ಚಾಂದ್ರಮಾನ.				Tamil. ಸೌರಮಾನ.		Stars. ನಕ್ಷತ್ರ.		The Sun. ಸೂರ್ಯ.		The Moon. ಚಂದ್ರ.	
	English. ಇಂಗ್ಲಿಷ್.	Kanarese. ಕನ್ನಡ.	Month. ಮಾಸ.	Date. ತಿಥಿ.	Time. ಕಾಲ.		Month. ಮಾಸ.	Date. ತೇದಿ.	Name. ಹೆಸರು.	Time. ಕಾಲ.	Rises. ಉದಯ.	Sets. ಅಸ್ತ.	Rises. ಉದಯ.	Sets. ಅಸ್ತ.
1	2	3	4	5	6		7	8	9	10	11	12	13	14
				.	ಘಳಿಗೆ. ವಿಘಳಿಗೆ.					ಘಳಿಗೆ.ವಿಘಳಿಗೆ	ಘಂ. ನಿಮಿಷ.	ಘಂ. ನಿಮಿಷ.	ಘಂ. ನಿಮಿಷ. ಹಗಲು.	ಘಂ. ನಿಮಿಷ.
1	Tuesday ...	ಮಂಗಳವಾರ ...	Vaisakha Suddha. ವೈಶಾಖ ಶುದ್ಧ.	8	3— 1	Chitrai. ಚಿತ್ರಿ.	19	ಪುಷ್ಯಮಿ	27—17	5—40	6—13	11—36	ಪ್ರಾತಃ	
2	Wednesday ..	ಬುಧವಾರ ..		9	1—57		20	ಆಶ್ಲೇಷ	28—37	5—40	6—13	12—28	0—31	
3	Thursday ...	ಗುರುವಾರ ...		10	...		21	ಮಖ	28—41	5—40	6—14	1—23	1—18	
4	Friday ...	ಶುಕ್ರವಾರ ...		11	55—54		22	ಪುಬ್ಬ	27—42	5—40	6—14	2—18	2— 5	
H. 5	Saturday ...	ಶನಿವಾರ ...		12	51—38		23	ಉತ್ತರ	25—43	5—39	6—14	3—15	2 52	
6	Sunday ...	ಭಾನುವಾರ ...		13	46—44		24	ಹಸ್ತ	23— 0	5—39	6—14	4—11	3—40	
7	Monday ..	ಸೋಮವಾರ ..		14	41—12		25	ಚಿತ್ತ	19—36	5—39	6—14	5—12	4—29	
8	Tuesday ☾ ...	ಮಂಗಳವಾರ ○ ...		15	35—18		26	ಸ್ವಾತಿ	15—45	5—38	6—15	6—14	5—20	
9	Wednesday ...	ಬುಧವಾರ ...	Vaisakha Bahula. ವೈಶಾಖ ಬಹುಳ.	1	29—11		27	ವಿಶಾಖ	11—38	5—38	6—15	7—18	6—12	
10	Thursday ..	ಗುರುವಾರ ..		3	17—18		28	ಅನೂರಾಧ	7—26	5—38	6—15	8—22	7— 9	
11	Friday ...	ಶುಕ್ರವಾರ ..		4	11—54		29	ಜೇಷ್ಠ	3—25	5—37	6—15	9—24	8— 7	
12	Saturday ..	ಶನಿವಾರ ..		5	7— 0		30	ಪೂರ್ವಾಷಾಢ	57— 0	5—37	6—15	10—23	9— 8	
13	Sunday ..	ಭಾನುವಾರ ..		6	2—55		31	ಉತ್ತರಾಷಾಢ	54—48	5—37	6—16	11—17	10— 8	
14	Monday ...	ಸೋಮವಾರ ...		7	...		1	ಶ್ರವಣ	53—28	5—36	6—16	ಪ್ರಾತಃ	11— 6	
15	Tuesday ...	ಮಂಗಳವಾರ ...		8	58—12		2	ಧನಿಷ್ಠ	53—14	5—36	6—16	0— 8	12— 2	
16	Wednesday ...	ಬುಧವಾರ ...		9	57—27		3	ಶತಭಿಷ	54— 4	5—36	6—16	0—53	12—55	
17	Thursday ...	ಗುರುವಾರ ...		10	57—57		4	ಪೂರ್ವಾಭಾದ್ರ	56—17	5—35	6—17	1—35	1—45	
18	Friday ...	ಶುಕ್ರವಾರ ..		11	59—48		5	ಉತ್ತರಾಭಾದ್ರ	59—42	5—35	6—17	2—15	2—33	
19	Saturday ..	ಶನಿವಾರ ..		12	60— 0		6	ರೇವತಿ	60— 0	5—35	6—17	2—55	3—18	
20	Sunday ..	ಭಾನುವಾರ ..		13	6—36		7	ರೇವತಿ	4—40	5—35	6—18	3—34	4— 5	

21	Monday	...	ಸೋಮವಾರ	...		14	11—17		8	ಅಶ್ವಿನಿ	9—52	5—33	6—15	4—49	5—35
22	Tuesday ●	..	ಮಂಗಳವಾರ ●	...		30	16—20	Vaiyasi. ವೈಯಾಸಿ.	9	ಭರಣಿ	15—51	5—34	6—18	4—52	5—38
23	Wednesday	..	ಬುಧವಾರ	...	Jyeshta Suddha. ಜ್ಯೇಷ್ಠ ಶುದ್ಧ.	1	21—20		10	ಕೃತ್ತಿಕ	22—28	5—34	6—19	5—34	6—25
C. 24	Thursday	..	ಗುರುವಾರ	...		1	...		11	ರೋಹಿಣಿ	28—54	5—34	6—19	6—17	7—14
25	Friday	..	ಶುಕ್ರವಾರ	...		2	25—53		12	ಮೃಗಶಿರ	34—49	5—34	6—19	7—3	8—2
26	Saturday		ಶನಿವಾರ	..		3	29—29		13	ಆರಿದ್ರಾ	39—53	5—34	6—19	7—51	8—51
27	Sunday	...	ಭಾನುವಾರ	...		4	32—1		14	ಪುನರ್ವಸು	33—49	5—34	6—20	8—40	9—40
28	Monday	...	ಸೋಮವಾರ	...		5	33—27		15	ಪುಷ್ಯಮಿ	46—44	5—34	6—20	9—31	10—28
29	Tuesday	..	ಮಂಗಳವಾರ	..		6	33—27		16	ಆಶ್ಲೇಷ	48—22	5—34	6—20	10—22	11—14
30	Wednesday	...	ಬುಧವಾರ			7	33—32		17	ಮಖ	48—41	5—34	6—21	11—15	ಪ್ರಾತಃ
31	Thursday	...	ಗುರುವಾರ	..		8	38—8		18	ಪುಬ್ಬ	47—55	5—34	6—21	12—8	0—1

Full Moon. ○
ಹುಣ್ಣಿಮಿ.

New Moon. ●
ಅಮಾವಾಸ್ಯೆ.

ರಾಹುಕಾಲ.

ಭಾನುವಾರ	ಸಾಯಂಕಾಲ	$4\frac{1}{2}$ ಘಂಟೆ ಯಿಂದ	6 ಘಂಟೆ ವರಿಗೆ.
ಸೋಮವಾರ	ಬೆಳಿಗ್ಯೆ	$7\frac{1}{2}$	9 ,,
ಮಂಗಳವಾರ	ಸಾಯಂಕಾಲ	3	$4\frac{1}{2}$,,
ಬುಧವಾರ	ಬೆಳಿಗ್ಯೆ	12	$1\frac{1}{2}$,,
ಗುರುವಾರ	ಸಾಯಂಕಾಲ	$1\frac{1}{2}$	3 ,,
ಶುಕ್ರವಾರ	ಬೆಳಿಗ್ಯೆ	$10\frac{1}{2}$	12 ,,
ಶನಿವಾರ	,,	9	$10\frac{1}{2}$,,

ಗುಳಿಕಕಾಲ.

ಭಾನುವಾರ	ಸಾಯಂಕಾಲ	3 ಘಂಟೆ ಯಿಂದ	$4\frac{1}{2}$	ಘಂಟೆ ವರಿಗೆ.
ಸೋಮವಾರ	,,	$1\frac{1}{2}$,,	3	,,
ಮಂಗಳವಾರ	,,	12 ,,	$1\frac{1}{2}$	,,
ಬುಧವಾರ	ಬೆಳಿಗ್ಯೆ	$10\frac{1}{2}$,,	12	,,
ಗುರುವಾರ	,,	9 ,,	$10\frac{1}{2}$	,,
ಶುಕ್ರವಾರ	,,	$7\frac{1}{2}$,,	9	,,
ಶನಿವಾರ	,,	6 ,,	$7\frac{1}{2}$	,,

GOVERNMENT HOLIDAYS.—ಸರ್ಕಾರದ ರಜಾ ದಿವಸಗಳು.

H. 5th Sri Sankaracharyara Aradhana. — ಶ್ರೀ ಶಂಕರಾಚಾರ್ಯರ ಆರಾಧನೆ.
C. 24th Ascensionday. — ಅರ್ಸೆಷಣೆ.

MYSORE GAZETTE OFFICE,
BANGALORE.

C. H. YATES,
Compiler, Mysore Gazette.

Govt. Press, Bangalore—1906.

471

The Mysore Gazette.

Vol. 41.] PUBLISHED BY AUTHORITY. [No. 20.

BANGALORE, THURSDAY, MAY 17, 1906.

☞ Separate paging is given to the Parts in order that they may be filed as distinct compilations.

CONTENTS.

PART I.—Notifications by the Government of His Highness the Maharaja of Mysore.

PART II.—Notifications by the Government of India; The Hon'ble the Resident in Mysore; Chief Judge; Survey and Inam Superintendent; Comptroller; Chief Engineer; Mysore State Railway; Amrut Mahal Department; Inspector-General of Registration; Senior Surgeon; District and Sessions Judges; Sub-Judges; Deputy Commissioners of Districts; Forest Officers; Presidents, Bangalore and Mysore City Municipalities; Season Reports; Mortuary and Meteorological Statements; Postal Notices; Civil and Military Station Notifications, &c.

PART III.—Legislative Measures and Rules thereunder.

PART IV.—Official Papers.

PART I.

Notifications by the Government of His Highness the Maharaja of Mysore.

GENERAL AND REVENUE.

No. 11609—*San.* (7-05)-151, *dated 9th May* 1906.

It is hereby notified for general information that attendance of persons from infected areas, at the festival noted below, has been prohibited by the Madras Government:—

Name of jatra—Dwadasa Garudotsavam festival.
Place—Tanjore.
Taluk—Tanjore.
District—Tanjore.
Date—From 4th June 1906 to 15th June 1906.

Authority—First Assistant Resident's endorsement No. 561, dated the 5th May 1906.
Remarks—All persons proceeding to the festival in contravention of this Notification will be turned back.

No. G. 5420—*G. M.* 113-05-3, *dated 3rd May* 1906.

The Government of His Highness the Maharaja are pleased to prescribe the following Rules for regulating the Grant of Scholarships for Scientific Research and Technical Education from the Damodar Dass Charities Fund:—

RULES.

1. With a view to encourage and promote Scientific Research and Technical Education among the people of Mysore, His Highness the Maharaja of Mysore has been pleased to sanction the following scholarships which shall be paid from four-fifths of the annual proceeds of the Damodar Dass Charities Fund.

II. The scholarships will be known as the Mysore Government Damodar Dass Scientific Research and Technical Education Scholarships.

III. There will be ordinarily two scholarships assigned annually, and each will be tenable for two years, or such other period as may be fixed by the Mysore Government with reference to the subject of research or of education selected; and the holder of the scholarship shall study in such University or College or Institution in England or elsewhere as shall be decided from time to time by the Mysore Government.

IV. A candidate for one of the scholarships must not be over twenty-two years of age, must have graduated from a College in the Mysore State and must be a native of Mysore by birth or domicile; provided that in default of born or domiciled Mysore students being available, others who have graduated from a College in Mysore may be chosen.

V. Candidates must have passed with credit a degree in Arts, Medicine or Engineering in an Indian University.

VI. Each candidate must forward with his application—

i. A satisfactory certificate of birth or domicile.
ii. A declaration that he has the consent of the head of his family to proceed to England, or elsewhere, for the purpose of this scholarship.
iii. Certificates of good character from two persons (not relations of the candidate) of respectability and good position, in addition to the one from the Head of the College where he was educated for the degree in Arts, Medicine or Engineering.
iv. A certificate of physical fitness to undergo the course of study or research which he will have to follow in England or elsewhere, signed by the Senior Surgeon of the Government of Mysore, or a Medical Officer not below the rank of a District Civil Surgeon.
v. A statement of the course of study or research which he desires to pursue, with testimonials as to his educational qualifications for such course.

VII. Applications shall be addressed to the Secretary to the Government of Mysore in the General and Revenue Department, and the selection of candidates will be made by the Government after the receipt of a report from a Committee appointed by the Government to report on the merits of the candidates.

VIII. Each candidate selected will be given travelling allowance, 2nd class rail and steamer fares, to England or elsewhere from Bangalore, and a similar allowance for travelling expenses back to Bangalore on the completion of his course of study or research. He will further be allowed during his stay in England or elsewhere outside India, a sum of £200 per annum, payable quarterly in advance, this allowance to be inclusive of College and examination fees, cost of books, instruments and boarding charges. If the Institution selected by Government for the prosecution by the candidate of his study or research is in India or Japan, the allowance will be Rs. 100 per mensem.

IX. The subjects which the scholarship-holder shall study will be one or more of the following:—

(1) Chemistry.
(2) Physics.
(3) Applications of Chemistry or Physics to agriculture and to the various Arts and Industries likely to be of greatest benefit to the Mysore Country—such as dyeing, the extraction, purification and testing of sandal and other indigenous oils; soap and candle making; glass-making; paper-making; match-making; photo-mechanical printing, sugar-refining; tanning; textile industries.
(4) Medical research specially in hygiene and bacteriology.
(5) Mechanical Engineering.
(6) Mining and Metallurgy, including electro-metallurgy.

X. Each candidate selected, unless otherwise directed by Government, shall, within such period as may be fixed by Government, proceed to England or elsewhere, and on arrival there present himself before Messrs. Coutts & Co., Strand, London, or any other person or persons named by Government, who will pay him the amount of the scholarship for the first quarter. He shall then without unnecessary delay proceed to and join the Institution selected or approved by Government for the purpose and there continue his study or research with all due diligence.

XI. The continuance of the scholarship to the holder will be strictly dependent on good conduct and will be conditional on satisfactory progress being made in his study or research as certified in a half-yearly report to be sent to Government by the Head of the Institution he attends. The stipend of the scholarship for each subsequent quarter will be paid only on a bill countersigned by the Head of the Institution and a certificate that the student is in regular attendance at the Institution and that his conduct and progress are satisfactory.

XII. The scholarship will be forfeited if the holder thereof—not being disabled by illness or prevented by any other cause which the Government may consider sufficient—fail to complete the course of study or research prescribed or is unfavourably reported on by the Head of the Institution. No return passage will in such case be paid.

XIII. A candidate selected shall, before proceeding to England or elsewhere, enter into a bond with the Mysore Government stipulating that he accepts the scholarship on the conditions specified in these rules, that he will prosecute the study or research with all due diligence; and that on completion of such study or research course he shall return to Mysore and shall, if called upon to do so, serve the Mysore Government for a period of not less than five years. If he fails to fulfil any of these conditions, he shall return to the Government the total amount received by him for passage money and scholarship.

XIV. The date within which applications shall be submitted and the subject or subjects of study and research selected annually by Government shall be notified in the Mysore Government Gazette not less than six months previously.

No. G. 5644—*G. M.* 261-05-2, *dated* 15*th May* 1906.

Thursday the 24th May 1906, being the Empire Day, will be observed as a General Holiday throughout the State, and all Offices, Courts and Public Institutions (Schools, etc.) will be closed on that day.

No. 11555—*L. B.* (128-05)-4, *dated* 8—9*th May* 1906.

Under clause (*h*) of para 7 of the rules framed under the Local Boards Regulation of 1902, Messrs. Birwal Puttanna Raj Urs and Patel Doddegowda are appointed members of the Taluk Board of Heggaddevankote in place of Messrs. Raja Urs and Dase Gowda, deceased.

No. 11641—*L. B.* (454-05)-2, *dated* 10—14*th May* 1906.

Mr. Nadipaiya, land-holder, is appointed a member of the Lakkur Union in the Malur Taluk, in place of Mr. Babaiya Setty, deceased.

No. 11865—*L. B.* (450-05)-2, *dated* 11—16*th May* 1906.

In accordance with Government Proceedings No. J. 2755-65—Regis. 7-8, dated the 29th March 1905, raising the strength of the Taluk Boards from twelve to fifteen, the following additional members are appointed for the several Taluk Boards in the Mysore District:—

Taluk Board	Ex-officio	Non-official [under clause (*h*)]
Heggaddevankote	The Sub-Registrar...	1. Mr. Karnagal Puttasami.
	(Sheristadar) ...	2. „ Kakankote Venkatappa.
T.-Narsipur ...	The Sub-Registrar...	1. „ Talakad Kuppu Rao.
		2. „ Ganjam Venkataramana Setti.
Gundlupet ...	Do ...	1. „ Mukahalli Narasimha Setti.
		2. „ Yereyur Kongalappa *alias* Mallavederu.
Nagamangala ...	Do ...	1. „ Kenchahalli Shanbhog Ramakrishniah.
		2. „ Nijaguna Gowda, Patel of Hettagonahalli.
Malvalli ...	Do ...	1. „ Raje Gowda, Patel of Chatnahalli.
		2. „ Basave Gowda, Patel of Devirahalli.
Mysore ...	Do ...	1. „ Puttanniah, Patel and Land-holder.
		2. „ Krishnappa, Shanbhog and Land-holder.
Yedatore ...	Do ...	1. „ Shadagopalachar, Land-holder.
		2. „ Krishnappa, son of Channappa, Land-holder.
Mandya ...	Do ...	1. „ Arali Sanjappa.
		2. „ Keyatangere Bettasetti
Chamrajnagar ...	Do ...	1. „ Subroya Setti, Land-holder and Merchant.
		2. „ Ejappa Setti, Land-holder and Merchant.
Hunsur ...	Do ...	1. „ Hutchanna, Patel.
		2. „ Nanjappiah, Shanbhog and Land-holder.
Krishnarajpete ...	Do ...	1. „ Sinappa, Shanbhog.
		2. „ Ranga Setti, son of Dunda Setti.
Seringapatam ...	Do ...	1. „ Krishnachar, Land-holder and President of the Agricultural Bank.
		2. „ W. Subraya Mudaliar, Sahukar.
Nanjangud ...	Do ...	1. „ Krishna Rao, Land-holder and Pensioned Amildar.
		2. „ Bhima Rao, Land-holder and Inamdar.

No. 11335—*Med.* (247-05)-2, *dated* 2*nd*—4*th May* 1906.

Under clause (1) of Section 2 of Regulation No. I of 1906, it is hereby declared that vaccination shall, from and after the date of this notification and for a period of six months, be compulsory in the local area within the control of the Sanitary Board of the Kolar Gold Fields.

2. The Sanitary Board is hereby empowered to make bye-laws with the approval of Government for carrying out the purposes of the Regulation.

No. 11650—*Ml.* (414-05)-12, *dated* 11*th May* 1906.

Under Section 6 of the Land Acquisition Regulation, No. VII of 1894, it is hereby declared that the undermentioned lands and houses in Basavannapalya, attached to Tumkur Town, are required for a public purpose, *viz.*, for extending the village site and also for improving the sanitation of the town of Tumkur.

No.	Taluk	Hobli	Village	Name of occupant	Khaneshumari No.	Description of houses and lands	Dimensions in yards			Boundaries			
							East to west	North to south	Total Sqr. yards	East	West	North	South
1	Tumkur	Tumkur	Tumkur	Chikkanna, brother of Giriya.	...	Mud and thatch roofed.	$10\frac{2}{3}$	$2\frac{2}{3}$	$39\frac{1}{4}$	Sira road ...	Mayarangamma's vacant site.	Chikkanna's vacant site	Kalasi Topa's vacant site.
2				Mayarangamma ...	2462	Mud roofed ...	$7\frac{2}{3}$	11	$84\frac{1}{3}$	Mayarangamma's vacant site.	Ranganna's and Ramchendra's vacant site.	Lane ...	Kalasi Ranga's house.
3				Kalasi Ranga	2463	Do ...	$14\frac{2}{3}$	7	$102\frac{2}{3}$	Kalasi Ranga's vacant site.	Owner's vacant site ...	Mayarangamma's house	Kalasi Topa's do
4				Kalasi Topa	2463	Do ...	$9\frac{1}{3}$	$12\frac{1}{3}$	$115\frac{1}{9}$	Lane ...	Do ...	Kalasi Ranga's house...	Chikkanna's house and vacant site.
5				Karim Saheb	2465	Mud and thatch roofed.	$15\frac{1}{3}$	$7\frac{2}{3}$	$117\frac{5}{9}$	Sira road ...	Lane ...	Owner's house and vacant site.	Lane.
6				Do	2465	Thatch roofed ...	$3\frac{2}{3}$	9	33	Owner's vacant site ...	Do ...	Do ..	Owner's vacant site.
7				Chikkamma	2464	Mud roofed ...	$4\frac{1}{3}$	10	$43\frac{1}{3}$	Lane ...	Owner's vacant site ...	Kalasi Topa's house ...	Nadakeri's house.
8				Hanumaiya *bin* Chikkanna.	2469	Mud and tile roofed ...	$6\frac{2}{3}$	$12\frac{2}{3}$	$84\frac{4}{9}$	Chikkanna *bin* Hanumantaiya's house.	Ranga's house ...	Chikkanna's vacant site.	Lane.
9				Ranga *bin* Ranga ...	2470	Mud and thatch roofed	$7\frac{1}{6}$	$6\frac{2}{3}$	$47\frac{7}{9}$	Hanumaiya *bin* Chikkanna's house.	Government waste land.	Kempa's do ...	Do
10				Kempa *bin* Chikka ...	...	Do ...	$7\frac{1}{3}$	8	$58\frac{2}{3}$	Chikkanna's vacant site	Do ...	Ranga's do ...	Owner's vacant site.
11				Chenda	2468	Do ..	$9\frac{1}{3}$	10	$93\frac{1}{3}$	Sira road ...	Puttaiya's vacant site ..	Chinigi's house ...	Lane.
12				Nadakeri	2466	Do ... Mud roofed ..	9 $9\frac{2}{3}$	9 $2\frac{1}{3}$	81 $22\frac{5}{9}$	Government waste land	His own vacant site ...	Chikkanna's house ...	Puttaiya's vacant site.
13				Chinigi	2468	Mud roofed ...	$7\frac{1}{3}$	$2\frac{2}{3}$	$23\frac{8}{9}$	Sira road ...	Puttaiya's waste land ..	Lane ...	Chenda's house.
14				Sanne	2467	Thatched roof ...	8	$3\frac{2}{3}$	$29\frac{1}{3}$	Owner's vacant site ...	Government waste land	Do ...	Lane.
15				Chikkanna *bin* Hanumantaiya.	2469	Tiled ... Do ..	12 $3\frac{1}{2}$	8 $2\frac{1}{2}$	96 $8\frac{3}{4}$	Government lane ...	His own house ...	Do ...	Do

No. R. 14133—*L. R.* 635-05-3, *dated 3rd May* 1906.

Under Section 6 of the Land Acquisition Regulation, No. VII of 1894, it is hereby declared that the land described hereunder is required for a public purpose, *viz.*, for inclusion in the bed of the Kurodi tank; and under Sections 7 and 3 (*c*) of the said Regulation, the Assistant Commissioner in charge of the Chikballapur group of taluks is authorised to take order for the acquisition of the said land :—

District	Taluk	Hobli	Village	Name of khatedar	Survey No.	Total	Assessment	Extent now required	Boundaries			
									East	West	North	South
						A. g	Rs. a. p.	A. g.				
Kolar	Goribidnur	Hosur	Kurodi	Appaiyachari	67	1 8	6 0 0	0 24	Survey No. 66 ..	Survey No. 77 ...	Survey Nos. 71-68 ...	Survey No. 78
				Do	70	1 10	6 0 0	1 10	Do 69 ..	Do 71 ..	Tank ...	Do 71
				Chikkathimma	67	1 8	5 12 0	0 24	Do 66 ...	Do 77 ...	Survey No. 71-68 ...	Do 78
				Do	76	0 37	2 4 0	0 37	Do 77 ...	Tank ...	Do 73 and 74 ...	Do 79
				Venkata *bin* Mutha	68	1 3	5 0 0	1 3	Do 66 ...	Survey No. 71 ..	Do 69 ...	Do 67
				Vyasa Rao	69	0 26	3 8 0	0 26	Tank ...	Do 70 ...	Tank ...	Do 68
				Doddamallappa	71	1 31	9 0 0	1 31	Survey No. 68 ...	Do 72 ..	Survey No. 70 ...	Do 67
				Narasimhiah	72	0 17	2 0 0	0 17	Do 71 ..	Do 73 ...	Tank ...	Do 74
				Do	75	0 39	5 0 0	0 39	Do 67 ...	Do 74 ..	Survey No. 71 ...	Do 77
				Hutcha	71	0 4	0 8 0	0 4	Do 68 ...	Do 72 ..	Do 70 ...	Do Nos. 67 and 75
				Venkata	74	0 22	2 0 0	0 22	Do 75 ..	Do 73 .	Do 72 ...	Do No. 76
				V. Nanja	77	0 24	2 8 0	0 24	Do 67 ...	Do 76 ..	Do 75 ...	Do 78
				Total ...	...	10 29	49 8 0	9 21				

No. R. 14387—*L. R.* 652-05-3, *dated 9th May* 1906.

Under Section 6 of the Land Acquisition Regulation, No. VII of 1894, it is hereby declared that the land described hereunder is required for a public purpose, *viz.*, for the construction of a Forest lodge; and under Sections 7 and 3 (*c*) of the said Regulation, the Assistant Commissioner in charge of Honnali group of taluks is authorised to take order for the acquisition of the said land :—

District	Taluk	Village	Name of khatedar	Survey No.	Dry, wet or garden	Total extent	Assessment	Extent now required	Boundaries			
									East	West	North	South
						A. g.	Rs. a. p.	A. g.				
Shimoga	Shikarpur	Kallamane	Siddanna, son of Sivanna	173	Dry ...	2 24	4 8 0	2 24	Survey No. 1 and the village site	Survey No. 172	Survey Nos. 3 & 4	Survey No. 174 and the village site
					Wet ...	1 33						
					Total extent.	4 17						

No. R. 14541—*L. R.* 666-05-3, *dated 11th May* 1906.

Under Section 6 of the Land Acquisition Regulation, No. VII of 1894, it is hereby declared that the land described hereunder is required for a public purpose, *viz.*, for improving the Honnali-Basavapatna road; and under Sections 7 and 3 (*c*) of the said Regulation, the Assistant Commissioner in charge of Honnali group of taluks is authorised to take order for the acquisition of the said land :—

District—Shimoga.
Taluk—Honnali.
Village—Benakanahalli.
Name of khatedar—Savantrava, wife of Bhima.
Survey No.– 74.
Dry, wet or garden—Dry.
Total extent—8 acres and 38 guntas.
Assessment—Rs. 3-8-0.
Extent required—20 guntas.
Boundaries—
East—Survey No. 73.
West—Survey No. 75.
North—Survey No. 43.
South—Survey No. 77.

No. R. 14577—*L. R.* 661-05-3, *dated 11th May* 1906.

Under Section 6 of the Land Acquisition Regulation, No. VII of 1894, it is hereby declared that the lands described hereunder are required for a public purpose, *viz.*, for opening a relieving weir channel to the Gondi channel, Kadur Taluk; and under Sections 7 and 3 (*c*) of the said Regulation, the Assistant Commissioner in charge of the Tarikere group of taluks is authorised to take order for the acquisition of the said lands:—

District	Taluk	Hobli	Village	Name of khatedar	Survey No.	Dry, wet or garden	Total extent	Assessment	Extent required	Boundaries			
										East	West	North	South
							A. g.	Rs. a. p.	A. g.				
Kadur	Kadur	Kadur	Mallesvara	Gullappa *bin* Jakanachari.	161	Wet ..	3 15	9 0 0	0 20	S. No. 162	S. No. 161	Channel kodi and S. No. 161	S. No. 161
				Shambhatta *bin* Krishna Sastri.	162	Do ...	2 27	7 0 0	0 10	Do	S. No. 162	S. No. 162	S. No. 162

No. R. 14788—*L. R.* 667-05-3, *dated 16th May* 1906.

Under Section 6 of the Land Acquisition Regulation, No. VII of 1894, it is hereby declared that the land described hereunder is required for a public purpose, *viz.*, for building houses, and under Sections 7 and 3 (*c*) of the said Regulation, the Assistant Commissioner in charge of the Hunsur group of taluks is authorised to take order for the acquisition of the said land :—

District—Mysore.
Taluk—Heggaddevankote.
Hobli –Kasaba.
Village—Yelehundi.
Name of khatedar—Subba Rao.
Survey No.—$\frac{2}{2}$.
Dry, wet or garden—Dry.
Total extent—4 acres and 1 gunta.
Assessment—Rs. 2 and annas 4.
Extent now required—4 acres and 1 gunta.
Boundaries—
East—Road.
West—Survey Nos. 3 and 8.
North— Do Nos. 10 and 11.
South— Do No. 1 and village.

CIVIL APPOINTMENTS.

Heads of Departments and all other officers concerned are informed that Notifications in the Gazette are in future to be accepted as disposing of all references regarding leave, transfers, appointments, powers and other personal questions affecting Gazetted officers, as to which orders are gazetted by the Government in this Part of the Gazette, and that any subsidiary orders as to relief of their subordinates and the like, which such notifications necessitate, must be issued by them on receipt of the Gazette, as no other orders will be issued by Government.

No. 11727—*Med.* (150-05)-10, *dated* 12*th May* 1906.

Under Article 188 of the Mysore Service Regulations, Mr. K. Anantaramaiengar, Sub-Assistant Surgeon in charge of the Local Fund Dispensary at Saklespur, is granted forty-five days' privilege leave, with effect from the 15th May 1906.

2. Mr. P. Chengalroy Mudaliar, Honorary Assistant Surgeon in charge of the Local Fund Dispensary at Nanjangud, will have charge of the Dispensary at Saklespur during the absence of the Sub-Assistant Surgeon on leave or until further orders.

No. G. 5647—*G. M.* 272-05-2, *dated* 15*th May* 1906.

Under Article 188 of the Mysore Service Regulations, Mr. R. Nanasami Rao, Private Secretary to the Dewan of Mysore, is granted privilege leave for fifteen days from the 8th of May 1906 or from such other date as from which he may have availed himself of the same.

No. R. 14661—*Ft.* 52-05-8, *dated* 12*th May* 1906.

Under Article 188 of the Mysore Service Regulations, Mr. B. Heera Singh, Deputy Conservator of Forests in the Kadur District, is granted privilege leave of absence for fifteen days, with effect from the 7th May 1906 or date of availment.

No. R. 14777—*L. R.* 672-05-2, *dated* 15*th May* 1906.

Under Article 188 of the Mysore Service Regulations, Mr. Abdul Hakim, Amildar of Srinivaspur, is granted privilege leave of absence for one month, with effect from the date of availment.

P. Subba Rao, B.A., B.L., Head-quarter Inspector of Police of the Kolar District, is appointed to act as Amildar and 3rd Class Magistrate of the Srinivaspur Taluk, during the absence of the Amildar on leave.

No. J. 3203, *dated* 16*th May* 1906.

The following transfers of officers of the Police Department are ordered in modification of Notification No. J. 2318—Police 121-1, dated the 24th February 1906 :—

1. Mr. B. Ramaswamaiya, B.A., Assistant Superintendent, from the Kadur District to the Chitaldrug District.

2. Mr. Nadig Subba Rao, Assistant Superintendent, from the Chitaldrug District to Bangalore, as Head-quarter Office Assistant to the Inspector-General of Police.

3. Mr. L. Krishna Rao, Superintendent, from the Tumkur District to the Bangalore District.

4. Mr. Y. V. Krishnamurthi, B.A., Superintendent, from the Bangalore District to the Tumkur District.

No. Fl. 7871—*Gl. Fin.* 309-05-4, *dated* 12—14*th May* 1906.

Mr. B. Gopaliengar handed over and Mr. Bishtopanth Badami assumed charge of the State Huzur Treasury on the afternoon of the 2nd May 1906.

The Petition Box kept at the Office of the General and Revenue Secretariat, Bangalore, will be cleared at 12 noon every day by the Secretary to Government, General and Revenue Department, and in his absence from Bangalore, by the Deputy Secretary.

By Order,
B. K. VENKATA VARADA IYENGAR,
Secy. to Govt., Gen. & Rev. Dept.

PUBLIC WORKS.

Camp No. 1—5, *dated Mysore,* 12*th May* 1906.

ERRATUM.

In Public Works Notification No. 229—1605, dated 12th March 1906, published in the *Mysore Gazette* dated 15th March 1906, for "with effect from 8th September 1905" read "with effect from 25th November 1905."

By Order,
W. MCHUTCHIN,
Secy. to Govt., P. W. Dept.

Notification dated 29th April 1906.

It is hereby notified for general information that the following quantities of timber will be sold by public auction in the depots of the Mysore District on the dates specified against each depot, by the District Forest Officer of the Mysore District :—

No.	Name of depot	Date of sale	Description	Cubical contents		Remarks
				No.	C. feet	
1	Mysore wood-yard ...	19th May 1906 ...	Matti logs	100	2,500	More or less
			Teak logs	350	12,000	
			Do pieces	100	1,500	
			Honne logs	50	1,000	
2	Nanjangud depot ...	21st May 1906 ...	Teak logs	100	3,000	
			Do pieces	100	1,500	
			Honne logs	50	1,500	

N. B.—Terms of sale.—Notification No. R. 15229-*R. F.* 155-92, dated the 15th March 1895, published in the *Mysore Gazette* No. 15, dated the 25th April 1895.

Notice dated 3rd May 1906.

The attention of the public is invited to the notification of this Department issued under the date 3rd May 1906, regarding the sale of minor forest products in several places of the Mysore District published at page 750 of the *Mysore Gazette* dated 10th May 1906.

M. G. RAMA RAO,
Dt. Forest Officer, Mysore.

Notification dated 13th May 1906.

It is hereby notified for general information that the exclusive privilege of collecting Tangadi (*cassia ariculata*) and Kakke (*cassia fistula*) barks on all Government unoccupied lands including State Forests, Plantations and Amrut Mahal Kavals, in the undermentioned Taluks of the Tumkur District, from 1st July 1906 to 30th June 1908, will be sold by talukwar by public auction by the District Forest Officer at the District Forest Office at Tumkur, on the 4th June 1906 :—

Names of Taluks.

(1) Tumkur, (2) Kunigal, (3) Tiptur including Turuvekere, (4) Sira, (5) Chiknayakanhalli, (6) Pavagada and (7) Gubbi.

2. The auction will commence at 2 P.M. on the day of sale, and, if the sale is not completed on the same day, it will be continued on the next following day at the same hour.

3. The exclusive privilege above described will be disposed of to the highest bidder, but the sale will be subject to the confirmation of the Deputy Commissioner, who reserves to himself the right to accept or reject any bid without assigning any reason therefor.

4. Parties intending to bid must attend in person or by duly accredited agents, and no person will be permitted to bid either on his own behalf or on account of any one else, unless he deposits a sum of Rs. 100 at the time of sale. The deposits made by the unsuccessful bidders will be returned at the close of the sale. The successful bidder shall, within three days after the confirmation of the sale is intimated to him, pay into the Tumkur District Treasury one half of the rental, including the deposit already made, with local cess at one anna in the rupee. Should he fail to do so, the deposit will be forfeited and the exclusive privilege will be resold by the officer conducting the sale.

5. The sale effected under the above para will be at the risk of the defaulting bidder, who will forfeit all gain, and, in the event of a loss by such resale, shall make good the deficiency between the total amount payable by him for the whole period under the terms of the original sale and the total amount payable by the successful bidder at the resale.

The Mysore Gazette.

Vol. 41.] PUBLISHED BY AUTHORITY. [No. 20.

BANGALORE, THURSDAY, MAY 17, 1906.

475

PART II.

Notifications by Govt. of India, Resident, Chief Court, &c.

FOREST DEPARTMENT.

It is hereby notified for general information that the following quantities more or less of Minor Forest Produce, will be sold by public auction in several places of the Mysore District, on the dates specified against each :—

No.	Place	Date of sale	Designation of the officer conducting the sale	Minor Forest products								
				1st class Lac		Gall-nuts		Honey		Wax		Tamarind
				Mds	lb.	Mds.	lb.	Mds.	lb.	Mds.	lb.	Mds.
1	Seringapatam Koti ...	25th May 1906	District Forest Officer, Mysore	110	7	1,045	21	6	3	0	22	...
2	Gundlupet ...	26th May 1906	Forest Range Officer ...	...		350	0	..		...		30
3	Chamrajnagar ..	28th May 1906	Do ...	...		500	0	...		...		...

TERMS OF SALE.—*Vide* Inspector-General's Notification dated 11th June 1887, published at pages 287—288 of the *Mysore Gazette*, dated 18th June 1887.

Notification dated 29th April 1906.

It is hereby notified for general information that the following quantities of timber will be sold by public auction in the depots of the Mysore District on the dates specified against each depot, by the District Forest Officer of the Mysore District :—

No.	Name of depot	Date of sale	Description	Cubical contents		Remarks
				No.	C. feet	
1	Mysore wood-yard ...	19th May 1906 ...	Matti logs	100	2,500	More or less
			Teak logs	350	12,000	
			Do pieces	100	1,500	
			Honne logs	50	1,000	
2	Nanjangud depot ...	21st May 1906 ...	Teak logs	100	3,000	
			Do pieces	100	1,500	
			Honne logs	50	1,500	

N. B.—Terms of sale.—Notification No. R. 15229-*R. F.* 155-92, dated the 15th March 1895, published in the *Mysore Gazette* No. 15, dated the 25th April 1895.

Notice dated 3rd May 1906.

The attention of the public is invited to the notification of this Department issued under the date 3rd May 1906, regarding the sale of minor forest products in several places of the Mysore District published at page 750 of the *Mysore Gazette* dated 10th May 1906.

M. G. RAMA RAO,
Dt. Forest Officer, Mysore.

Notification dated 13th May 1906.

It is hereby notified for general information that the exclusive privilege of collecting Tangadi (*cassia ariculata*) and Kakke (*cassia fistula*) barks on all Government unoccupied lands including State Forests, Plantations and Amrut Mahal Kavals, in the undermentioned Taluks of the Tumkur District, from 1st July 1906 to 30th June 1908, will be sold by talukwar by public auction by the District Forest Officer at the District Forest Office at Tumkur, on the 4th June 1906 :—

Names of Taluks.

(1) Tumkur, (2) Kunigal, (3) Tipur including Turuvekere, (4) Sira, (5) Chiknayakanhalli, (6) Pavagada and (7) Gubbi.

2. The auction will commence at 2 P.M. on the day of sale, and, if the sale is not completed on the same day, it will be continued on the next following day at the same hour.

3. The exclusive privilege above described will be disposed of to the highest bidder, but the sale will be subject to the confirmation of the Deputy Commissioner, who reserves to himself the right to accept or reject any bid without assigning any reason therefor.

4. Parties intending to bid must attend in person or by duly accredited agents, and no person will be permitted to bid either on his own behalf or on account of any one else, unless he deposits a sum of Rs. 100 at the time of sale. The deposits made by the unsuccessful bidders will be returned at the close of the sale. The successful bidder shall, within three days after the confirmation of the sale is intimated to him, pay into the Tumkur District Treasury one half of the rental, including the deposit already made, with local cess at one anna in the rupee. Should he fail to do so, the deposit will be forfeited and the exclusive privilege will be resold by the officer conducting the sale.

5. The sale effected under the above para will be at the risk of the defaulting bidder, who will forfeit all gain, and, in the event of a loss by such resale, shall make good the deficiency between the total amount payable by him for the whole period under the terms of the original sale and the total amount payable by the successful bidder at the resale.

If the deficit amount be not paid on demand, it will be liable to be recovered as a revenue demand.

6. The lessee shall sign an agreement binding himself to observe the conditions below, and it should be executed within three days from the date on which the confirmation of the sale may be intimated to him; in default, the deposit will be forfeited and the right resold.

7. The balance of the lease amount with the local cess at one anna in the rupee on this sum shall be paid before the end of July 1907. In the event of this amount not being paid, collection and removal of the barks will be stopped and the whole of the balance of the lease amount and local cess due will be recovered as a revenue arrear.

Conditions.

(1) No stem or shoot under one year to be cut or barked.

(2) To hold him responsible to prevent the felling of tender stems by his servants or sub-contractors.

(3) To furnish a list of sub-contractors and mestris who may be appointed by him for the collection of barks in the different working circles.

(4) The barked wood to be the property of the lessee.

(5) To keep accounts showing the quantity of bark removed in accordance with the lease and to permit inspection of such accounts by the District Forest Officer, Forest Range Officer, and the Amildar or any other officer deputed by them.

(6) To provide passes for each cart-load of bark removed in such manner as may be laid down by the District Forest Officer.

(7) To remove out of the limits of the Tumkur District and before the end of June 1908, all barks cut, collected or stored.

(8) In the event of breach of any of the above conditions, the lease is liable to be cancelled, all the barks collected to be confiscated, and the whole of the amount paid by him or such portion thereof, as may be decided by the Deputy Commissioner, Tumkur District, to be forfeited to Government.

H. RAMIAH,
for *Dy. Comr., Tumkur Dt.*

Notice dated 14*th May* 1906.

It is hereby notified for general information that the following minor forest produce will be sold by public auction in the depots of the Hassan District on the dates specified against each, by the District Forest Officer or other officer deputed by him, subject to confirmation by the Conservator of Forests :—

Serial No.	Name of produce	Date of sale	Place of sale	Quantity	Remarks.
1	Gallnuts ...	7th June 1906 ...	Hassan ..	3,000 mds. ...	More or less.
2	Wood-oil ...			52 lbs. ..	Do
3	Cardamum ...			T. 2 lbs. 36 oz. 9 or 5¼ mds.	Do
1	Gallnuts ...	5th June 1906 ...	Arsikere ...	2,000 mds. ...	Do
1	Do ...	9th June 1906 ...	Arkalgud ...	600 mds. ...	Do

Terms of sale.—*Vide* notification published in the *Mysore Gazette*, No. 1529—R. F. 155-92, dated 15th March 1895, but payment must be made in full immediately after the sales.

Y. SITARAMAIYA,
District Forest Officer, Hassan.

EDUCATION DEPARTMENT.

Notification D. No. 46, *dated* 10*th May* 1906.

ENGINEERING AND MEDICAL SCHOLARSHIPS.

1. Notice is hereby given that the Government of Mysore will award three Engineering scholarships and two Medical scholarships this year.

2. *The Engineering scholarships* will be worth Rs. 30 a month, and will be tenable at the Madras Engineering College for a period of three years. Candidates must have passed the B. A. Degree Examination. Graduates who have passed in Physical Science or Mathematics as their optional branch will be preferred to other graduates. Subsistence and other suitable

allowances will be granted during the practical course (of one year in the case of Civil Engineering Students and two years for Mechanical Engineers) which will follow the theoretical course. The period of training in the practical course will count as service qualifying for pension, provided the scholars are entertained in the Mysore Public Works Department soon after they pass out from the College. They will also be bound to enter into an agreement to serve the Mysore Department after they pass out, should their services be required by the Mysore Government, or to refund the full amount of the scholarships drawn by them if they refuse to serve.

3. *The Medical scholarships* will be worth Rs. 25 a month, and will be tenable either at the Madras Medical College, or the Grant Medical College, Bombay, in the former College for a period of four years if the scholars choose the L. M. & S. Degree course, or for a period of five years if the scholars choose the M. B. & C. M. Degree course; in the latter College for a period of five years. Candidates must have passed the B. A. Examination.

4. All candidates must be natives of Mysore. They should state their age, caste and father's name and profession in their application.

5. All candidates must attach to their application a medical certificate of physical fitness from any medical practitioner holding the diploma of L. M. & S. or the degree of M. B. & C. M. or a higher degree. After a candidate has been selected for a scholarship, he will have to produce a medical certificate of physical fitness from the Senior Surgeon with the Government of His Highness the Maharaja of Mysore.

6. The continuance of the scholarships will depend on favorable reports of conduct and progress received from the Principal of each College, and on passing the periodical examinations.

7. Applications with *copies* of College and other testimonials for the Engineering and Medical scholarships must be sent to the Inspector-General of Education in Mysore not later than Thursday the 31st May 1906. Applications from students of Colleges should be sent through the Principals.

Notification D. No. 47, dated 16th May 1906.

For the celebration of the Empire Day the 24th May 1906 shall be observed as a holiday in all Government and Aided Institutions in Mysore.

H. J. BHABHA,
Inspr.-Gen. of Education.

POLICE DEPARTMENT.

Notice dated Champion Reefs, 4th May 1906.

Notice is hereby given that a sum of Rs. 1-3-10, being the arrears of pay and travelling allowance due to certain ex-Police constables as detailed below, lies unclaimed and that, if the claimants do not appear and receive the amount from the undersigned within one month from this date, the same will be credited to Government:—

Name and Division	Amount			Remarks
	Rs.	a.	p.	
Ex. P. C. No. 176, Mannaji Rao of A Division	0	6	11	Arrears of pay for February 1906.
Do 200, Varadaraju do ...	0	6	11	Do do
Do 134, Abboy Naidu do ...	0	6	0	Arrears of travellnig allowance for July 1905.
Total ...	1	3	10	

By Order,
R. J. M. MAYNE,
Deputy Supt. of Police, Kolar Gold Fields.

A reward of Rs. 10 will be paid to any person or persons who will give information to the Assistant Superintendent of Police, Hassan District, leading to the arrest of the undermentioned accused who absconded after committing culpable homicide not amounting to murder under Section 304, Indian Penal Code, in Hosahalli village, Belur Taluk:—

(Crime No. 1—25 of 1905-06 of the Arkalgud Taluk, Hassan District.)

Name—Dyava.
Father's name—Hutchegowda.
Caste—Vakkaliga.
Height—About five feet.

Identification marks: —Complexion oily red; face oval and slightly pock-marked, body somewhat corpulent, moustache just growing; brows bear some scar marks; wore a pair of gold ear-rings, a black check coat with brown stripes and white dhoti with red lines.

A reward of Rs. 10 will be paid to any person or persons who will give information to the Assistant Superintendent of Police, Hassan District, leading to the arrest of the undermentioned accused who absconded soon after committing culpable homicide not amounting to murder under Section 304, Indian Penal Code, in Bandahalli village, Belur Taluk, on the night of 5th December 1905:—

(Crime No. 3—54 of 1905-06 of the Belur Taluk, Hassan District.)

Name—Hiraga.

Age—About 35 years.

Caste—Holeya.

Occupation—Was serving as a groom in one Puttappa Setty's Coffee Estate near Bandahalli village, Belur Taluk.

Identification marks;—Complexion oily red, face elongated and slightly pock-marked.

GULAM MOHIDEEN KHAN,
Asst. Supt. of Police, Hassan Dist.

Dated 7th May 1906.

Descriptive roll of a woman named Sannamma, wife of Subbaiya *bin* Narnappa who disappeared from her house at Homemaradu, within the limits of Talaguppa Station of the Sagar Taluk.

Name of Taluk—Sagar.
Name—Sannamma.
Caste—Havik Brahman.
Residence—Honnemaradu.
Height—Five feet, three inches.
Age—Twenty-six or twenty-seven years.
Complexion—Dark brown.
Descriptive marks—Round face, the two middle *incisors* of the upper jaw are fallen.
Any information about the person may be kindly communicated to the undersigned.

M. S. NARAYAN RAO,
for *Supt. of Police.*

MISCELLANEOUS.

KOLAR DISTRICT.

Dated 7th May 1906.

It is hereby notified that the marginally noted Inam villages of the Kolar District will be sold by public auction, on the 21st June 1906, in the offices of the Amildars of the respective taluks, on account of arrears of revenue due to Government.

	Taluk	*Village*
(1)	Kolar	... Holur.
(2)	Chikballapur	... Chiganahalli.
(3)	Bowringpet	... Suriganahalli.
(4)	Do	... Kanambele.
(5)	Bowringpet	... Chambenahalli.
(6)	Do	... Ramanayakanahalli.
(7)	Do	... Ainorahosahalli.
(8)	Do	... Yeluvahalli.

NOTE.—For further particulars *vide* notifications published on pages 753-760, Part II of the *Mysore Gazette* dated 10th May 1906.

C. SHESHADRIENGAR,
for *Dy. Comr.*

IN THE COURT OF THE ASSISTANT COMMISSIONER AND 1ST CLASS MAGISTRATE, KOLAR GOLD FIELDS.

Notice is hereby given that the sale proceeds (Rs. 2-12-0) of rice found in the Robertsonpet market on 1st February 1906 and produced by Robertsonpet Police with Property Form No. 39, dated 6th February 1906, and sold by order of Court, will be confiscated to Government, if not claimed within six months from this date.

Dated 9th May 1906.

Notice is hereby given that the marginally noted stamp paper produced by Robertsonpet Police, with Property Form No. 47, dated 3rd May 1906, will be confiscated to Government, if not claimed within six months from this date.

A stamp paper of eight annas value bearing No. 476, dated 11th April 1906, issued in the name of one Rayappan of Marikuppam Camp and found in the Robertsonpet Market by the Market Sergeant on 17th April 1904.

Dated 9th May 1906.

Notice is hereby given that certain monies, *viz.*, Rs. 985-3-6 seized by the Police at the Jolarpet Railway Station on 22nd January 1905 on the person of one Varadan and produced in C. C. 389 of 1904-05 on the file of this Court, will be confiscated to Government if not claimed within six months from this date.

R. B. PLUMER,
Asst. Comr. & 1st Class Magte.

KOLAR GOLD FIELDS SANITARY BOARD.
Notice dated 5th May 1906.

Notice is hereby given that the contract for the exclusive right of collecting fees for slaughtering (1) cattle, (2) sheep and goats in the slaughter enclosures at—

(1) Marikuppam (Stevens' Camp),
(2) Robertsonpet market, including daily slaughtering for the villages and camps, together with the right of collecting manure in the bandy stand, at the said market, from the 1st July 1906 to 30th June 1907,

will be put up to public auction and sold to the highest bidder, at the Court house, Champion Reef, at 11 A.M. on the 21st June 1906.

The successful bidder will be required to deposit at once, in cash, or currency notes, (¼) one-fourth of the purchase money, or his bid will be cancelled, and the right to collect the manure and to collect fees for slaughtering animals re-auctioned, any loss to which the Sanitary Board may be thereby put to be borne by the said bidder. The balance of the purchase money, etc., to be paid thereafter, in eleven (11) regular monthly instalments, commencing from the 1st August 1906.

The contractor will be called upon to enter into the following agreements, with the undersigned :—

(1) To slaughter only in the licensed slaughter houses or in such place as the Sanitary Board may from time to time direct.
(2) To keep the slaughter enclosures and bandy stand clean, and in sanitary condition, to the satisfaction of the Sanitary Inspector, or other officer of the Board.
(3) To remove all skins, carcasses, etc., immediately from the slaughter enclosures.
(4) To remove without delay all bones, horns and offal, from the slaughter enclosures, and bury them in such place as may be pointed out by the Sanitary Inspector.
(5) The contractor will also be called upon to take charge of the slaugher enclosures and bandy stand, on the 30th June 1906, and on the expiry of the contract to hand over the said slaughter enclosures, and bandy stand, to the President of the Sanitary Board, or such officer as he may depute for the purpose, in good order and repair.

The undersigned reserves to himself the right to refuse any bid, without assigning any reason.

R. B. PLUMER,
Vice-President.

TUMKUR DIVISION.
Notification dated 5th May 1906.

Rupees 150 (one hundred and fifty only) due to contractor Ranganna on account of earnest money deposited by him for restoring Chikmalur tank has been outstanding in the accounts of this office since July 1905. It is hereby notified that if the party does not present himself in the Executive Engineer's office at Tumkur to receive payment within a period of one month from the date of publication of this notification, the amount will be credited to Government as unclaimed deposits.

C. MADAVA RAO,
Executive Engineer.

MYSORE DISTRICT.
Abstract Notification dated 18th April 1906.

It is hereby notified that Jodi Chamalapura village, Kasaba hobli, Yedatore Taluk, will be sold by public auction in the said Jodi Chamalapura village on the 8th June 1906 on account of arrears of revenue due to Government.

For further particulars see page 705 of Part II of *Mysore Gazette* No. 18, dated 3rd May 1906.

H. H. SPARKES,
Dy. Comr.

Notice dated 24th April 1906.

The attention of the public is invited to the notification published on page 706 of the *Mysore Gazette*, Part II, dated the 3rd May 1906, regarding the sale of the right to collect tolls and market fees in the Mysore District for the year 1906-07, *i. e.*, from the 1st July 1906 up to the 30th June 1907.

H. H. SPARKES,
President, Dist. Board.

Notification dated 2nd May 1906.

It is hereby notified that in satisfaction of arrears of land revenue due by Surapandit, Lakshmipathipandit, Parvathamma and Surapandit, Inamdars of Sarvamanya Machavalalu, Krishnarajpete Taluk, revenue defaulters, the undermentioned immoveable property will be sold by public auction in the office of the Amildar of the Krishnarajpete Taluk on the 28th June 1906. The sale will commence at 12 noon, and the property will be knocked down to the highest bidder without reserve. The sale will be conducted by the Assistant Commissioner in charge of the Krishnarajpete group of Taluks.

2. The amount of revenue payable by the purchaser on the property for the whole of the years 1904-05 and 1905-06 is Rs. 1,598-6-0, as shown in detail in the statement at foot.

3. Purchasers will be required to deposit twenty-five per cent of the purchase money at the time of sale, and where the remainder of the purchase money may not be paid within fifteen days from the date of the sale, the money so deposited shall be liable to forfeiture.

4. When such deposit shall not be made nor the remaining purchase money paid up, the property shall be re-sold at the expense and risk of the first purchaser.

5. The sale shall be stayed, if the defaulters or any person acting on his behalf, or claiming an interest in the property, tenders the full amount of the arrears of revenue with the interest and other charges, provided such tender be made before the property is knocked down.

6. The sale of the property will not become absolute until the sale has been confirmed by the Deputy Commissioner or by some other officer duly authorized to confirm the same.

7. Purchasers having completed the payment of the purchase money will, as soon as the sale has been confirmed by the Deputy Commissioner, be placed in immediate possession, and the property will be registered in the name of the purchaser and a certificate of sale signed and sealed by the Deputy Commissioner, will be granted to him. It is to be distinctly understood that the Government are not responsible for errors of description or in estimated extent.

8. Provided parties deeming themselves aggrieved by the sale, shall be at liberty to appeal to the Deputy Commissioner within thirty days from the day of sale, and also to appeal to Government against his order within the time prescribed by law, and the purchase shall be conditional on the final order in such appeal.

SCHEDULE.

Taluk	Hobli	Village	Names of defaulters	Description of property						Amount of arrears due to Government including notice fees, etc.
				Buildings		Land				
				Name of building	Estimated value	Number or name of land	Dry, wet or garden	Area	Assessment	
								A. g.	Rs. a. p.	Rs. a. p.
Krishnarajpete.	Akkihebbalu.	Sarvamanya Machavalalu.	Surapandit, Lakshmipathipandit, Parvathamma and Surapandit, Inamdars.	Entire village ...			Dry.	276 6	261 4 3	1,596 14 0
							Garden.	1 6	7 3 11	1 8 0
							Wet.	199 7	1,348 6 2	...
							Kharab.	251 24	.....	
								728 3	1,614 12 0	Total ... 1,598 6 0
										Notice fees, etc. ... 12,000 0 0
										Estimated value ...

Boundaries.

East—Akki Hebbalu.
West—Yedatore Taluk.
South—Singanahalli and Yedatore.
North—Vaddaragudi.

C. KRISHNA RAO,
for *Dy. Comr.*

SHIMOGA DISTRICT.

Abstract Notification dated 4th May 1906.

It is hereby notified for general information that the right of collecting tolls at the toll gate at Agumbe ghat in the Tirthahalli Taluk, from 1st July 1906 to 30th June 1907, will be sold by public auction in the Taluk Cutcherry at Tirthahalli, by the Deputy Commissioner or the Assistant Commissioner deputed for the purpose on the 23rd May 1906 and that of collecting the same at Hyderghar ghat and at Lakshmipur in the Nagar Taluk in the Taluk Cutcherry at Kallurkatte on the 26th May 1906 by the Assistant Commissioner of Sagar.

For further particulars see original notification published at page 711 of the *Mysore Gazette*, dated 3rd May 1906.

Abstract Notification dated 3rd May 1906.

It is hereby notified for general information that the exclusive right of transporting passengers, goods, vehicles, animals, etc., and of collecting tolls at the ferries in this district for one year from 1st July 1906 to 30th June 1907, will be put up to auction by the Amildar or Sheristadar at each taluk head-quarters, subject to the confirmation by the Deputy Commissioner.

For further particulars, see original notification published at page 762 of the *Mysore Gazette*, dated 10th May 1906.

M. S. NARAYAN RAO,
Deputy Commissioner.

Memo.

Mr. M. K. Hanumantha Rao, Acting Amildar and 3rd Class Magistrate, Sorab Taluk, is hereby invested with the following additional powers to be exercised by him until he is relieved by Mr. S. Krishnappa, Amildar, on leave :—

(1) Power to make orders prohibiting repetitions of nuisances (Section 143, Cr. Pro. Code).

(2) Power to make orders under Section 174.

(3) Power to take cognizance of offences upon complaint, Section 190.

(4) Do upon Police Reports, Section 190.

M. S. NARAYAN RAO,
District Magistrate.

KADUR DISTRICT.

Notification dated 21st April 1906.

Under para 5 of Government Notification No. 9007—Leg. 56, dated Bangalore 11th December 1901, it is hereby declared that fishing in the rivers Tunga and Bhadra running through the Kadur District is prohibited, during the season from 1st April up to 30th September 1906.

V. KRISHNA RAO,
for *Dy. Comr.*

PROCEEDINGS OF THE MEETING OF THE KADUR DISTRICT BOARD, CONVENED AT CHIKMAGALUR ON THURSDAY THE 22ND FEBRUARY 1906.

PRESENT.

1. M. Chengiah Chetty, Esq., B. A. (*President*).

Ex-officio Members.

2. Mr. K. Mylar Rao, Divisional Assistant Commissioner.
3. „ V. Krishna Rao, Treasury Officer.
4. „ H. J. Molloy, Executive Engineer.
5. „ M. K. Tirumalacharya, Deputy Inspector of Schools.
6. „ T. V. Kuppuswami Mudaliar, District Medical and Sanitary Officer.

ABSENT.

7. Seat vacant.

Non-official Members.

PRESENT.

8. Mr. N. Abdul Khader Sab.
9. „ C. Srinivasa Rao.
10. „ T. Narasimha Iyengar.
11. „ S. Parvatappa.
12. „ H. Watson.
13. „ P. Ranganna.
14. „ Davood Sab.

ABSENT.

15. Mr. A. Chendra Gowda (reported inability to attend).
16. „ Channakesava Rao do
17. „ J. Ganesa Rao do
18. „ T. Srinivasa Rao.
19. „ Y. Santhappa Setty.
20. „ M. Ramachandra Rao.
21. „ H. Pilkington.
22. „ N. Srikanta Sastry (resigned).
23. Vacant.
24. Do
25. Do

I. Read the audited District Fund Accounts of Receipts and Expenditure from the month of July up to end of October 1905, of which the following is an abstract :—

		Rs.	a.	p.
1. Opening Balance on 1st July	... ...	8,569	12	4
2. Receipts up to end of October 1905	... ...	4,776	12	0
	Total ...	13,346	8	4
3. Expenditure up to end of October 1905	... ...	14,716	9	7
	Balance ...	—1,370	1	3

Resolution.—Recorded.

II. Read returns of patients treated at the Hindu Vaidyasalas of Chikmagalur, Tarikere and Birur from July 1905 up to end of January 1906. The number of patients admitted were 11,865, 8,364 and 1,947, while those for the same months of the previous year were 17,531, 8,931 and nil, respectively.

Resolution.—Recorded.

III. The following Government Orders and other papers were read and recorded :—

(1) Government Order No. 4581-4—Med. (13-05)-6, dated the 3rd November 1905, requesting the Senior Surgeon to issue clear instructions to the Hospital Assistants to announce beforehand the day on which they would visit the villages, so that the villagers may avail themselves of the presence of the Hospital Assistant on the day appointed. Also District Medical and Sanitary Officer's docket No. 1002, dated the 28th December 1905, forwarding a statement showing the names of the villages and the names of days of the week on which the Hospital Assistants visit those places.

(2) Government Proceedings No. 5276-307—Med. (111-05)-3, dated 22nd November 1905, sanctioning the introduction of the "Kurnool Scheme" of Vaccination into the Mysore Province.

(3) Government Proceedings No. 5553-92—Med. (115-05)-4, dated the 27th November 1905, reviewing the Annual Medical and Sanitary Report of the State for the year 1904.

(4) Government Proceedings No. 5881-92—L. B. (27-05)-6, dated the 4th December 1905, directing that the estimates for the special repairs of Local Fund roads and other works should be placed before the Boards for sanction previous to countersignature by the Presidents.

(5) Government Proceedings No. 6433-41—L. B. (91-05)-2, dated the 19th December 1905, directing that Amildars need not be appointed ex-officio Members of District Boards as Assistant Commissioners should fully represent the interests of the taluks in their charge.

(6) Government Order No. 6714-22—L. B. (163-05)-4, dated the 28th December 1905, stating that Government consider that the work of providing water must be done by one of the menial servants of the Dispensary; that in places where this is not possible, other arrangements may be made by the payment of daily wages not exceeding two annas to the outsider whose services may be called into requisition and that the proposal to attach an allowance to one of the menial servants employed in the Dispensary does not commend itself to Government.

(7) Government Proceedings No. 7187-98—L. B. (267-05)-2, dated 10th January 1906, directing that all expenditure to be incurred on account of the incomplete works of previous years should be met by re-appropriation from the existing grants in the budget, as no grant of lapses is admissible under budget rules.

(8) Government Proceedings No. 7366-409—Med. (84-05)-15, dated 16th January 1906, directing the Heads of Departments and others to make the necessary arrangement in the matter of payment of maintenance and other allowances direct with the patients whom they send to Kasauli for treatment.

(9) Government Order No. 7460-78—Ml. (370-05)-1, dated 18th January 1906, issuing instructions in the matter of submission of supplemental and revised budgets.

(10) Government Order No. 7548-56—Med. (111-05)-4, dated 19th January 1906, reviewing the Report on the Vaccine Institute and on vaccination for the year 1904.

(11) Government Order No. 8555-6—L. B. (85-05)-2, dated 17th February 1906, sanctioning the execution of certain non-budgetted works.

IV. Read subject No. V, and the resolution passed thereon by the District Board at its meeting held on the 20th December 1905, to the effect that the question of contributing Rs. 1,000 for the construction of a musafirkhana at Sollebyle as per Government Order No. 5701-2—L. B. (69-05)-5, dated 30th November 1905, be brought up at the next budget meeting.

Resolution.—The Board regrets to state that no funds are, at present, available for contribution towards the construction of the proposed musafirkhana at Solebyle. As Solebyle and Santhweri are both situated on Provincial Fund roads, which are much frequented by travellers, the construction of musafirkhanas at these places is very necessary, and the Board desires that Government be addressed to construct the musafirkhanas from Provincial Funds, at an early date, as the travelling public is put to much inconvenience.

V. Read Chief Engineer's letter No. 8360, dated 20th December 1905, informing that the work of widening the bund of the Hirekathur Dodkere tank to ten feet will be done at a cost of Rs. 486 and paid for out of Provincial Funds only on condition that the raiyats execute a mutchalika that they will maintain the bund, which will soon be otherwise ruined by the cart traffic or if the proper maintenance of the bund to this standard by the raiyats under the maintenance rules is guaranteed.

Resolution.—Recorded.

VI. Read Tarikere Taluk Amildar's report No. 286, forwarding the proposal of the Tarikere Taluk Board to open out a road from Bukkambudi to Channagiri owing to heavy traffic.

Resolution.—The Board is unable to provide funds at present.

VII. Read Tarikere Taluk Amildar's report No. 159, dated 20th December 1905, forwarding the proposal of the Tarikere Taluk Board to increase the contingent allotment of the Hindu Vaidyasala from Rs. 9 to Rs. 15. Also the resolution of the Tarikere Municipal Board, agreeing to pay its quota of the extra contribution towards the proposed increase.

Resolution.—The Board is glad to learn that the institution has become very popular and is therefore prepared to contribute its quota, *viz.*, Rs. (20-9-1) from the ensuing year.

VIII. Read Chikmagalur Taluk Amildar's report No. 138, dated the 26th December 1905, forwarding the proposal of the Chikmagalur Taluk Board, requesting the establishment of a cattle pound at Mavinhalli in the Vastara hobli, as the one at Neradi is far away from the place, and that the one at Halsmane has been lately abolished.

Resolved that a cattle pound be established at Mavinhalli as recommended by the Taluk Board.

IX. Read Senior Surgeon's docket No. 3716, dated 3rd—4th January 1906, agreeing that a new building for locating the Dispensary at Tarikere would be the best and that the residence for the Hospital Assistant and another for the midwife should be erected at the same time as the Dispensary. Also Senior Surgeon's No 3863, dated 6th—8th January 1906, forwarding extract of his remarks during his inspection of the Tarikere Dispensary to the same effect.

Resolution.—Approved.

X. Read Executive Engineer's memo No. 78, dated 10th April 1905, forwarding a statement showing the names of Dispensaries, the flooring of which is to be renovated, and requesting that the amount of Rs. 663, contribution payable from District Funds, be provided in the budget.

Resolved that Rs. 663 as per estimate be provided in the budget.

XI. Read Executive Engineer's docket No. 14, dated 16th January 1906, forwarding revised statements of amounts required for the repairs of several Dispensary buildings in the district, the amount required to be contributed from District Funds being Rs. 2,784.

Resolved that as a sum of Rs. 663 has been provided in the ensuing year's budget to meet the cost of flooring Dispensaries, the amount required for repairing the Dispensaries cannot be sanctioned for want of funds.

XII. Read Kadur Division Executive Engineer's docket No. 377, dated 28th—31st December 1905, forwarding the budget estimates of works to be executed by the Public Works Department during the ensuing year 1906-07. Read also the list of estimates for works proposed by the several Taluk Boards to be executed during the ensuing year

Resolution.—The Board allots only a sum of Rs. 30,994 for works by the Public Works Department and Rs. 3,334 for those of Civil Department as per details given in the budget statements, and regret that they have to defer several of the important and urgent works for want of funds. In order to remedy this state of things the Board unanimously resolved to approach Government to kindly sanction the transfer of 63½ miles of the following roads costing Rs. 6,090 to Provincial Funds and thus enable the Board to provide for important and urgent works of sanitation and well works, which are badly required in the several taluks of the district:

		Rs.
1. Shimoga-Yedahalli road 10½ miles at Rs. 100 per mile	...	1,050
2. Chikmagalur-Yedahalli road 40 miles at Rs. 100 each	...	4,000
3. Bababudan Hill road 1st 13 miles at Rs. 80 each	...	1,040
Total	...	6,090

XIII. Read Chief Engineer's letter No. 68, dated 5th January 1906, informing that as there is no money available under "Original Communications," the work of constructing a native kitchen to the travellers' bungalow at Sampigekan will be ordered to be undertaken next year, unless it is found that funds are available under that head after receipt of all the re-appropriation statements which are now due, in which case the Superintending Engineer will be requested to sanction an estimate for the work. Read also docket No. 24, dated 25th January 1906, from the Executive Engineer, Kadur Division, forwarding an estimate for Rs. 1,120 for countersignature.

Resolution.—The estimate may be countersigned and returned and the Chief Engineer requested to sanction the construction of stables along with this work.

XIV. Read Executive Engineer's docket No. 20, dated 20th—22nd January 1906, forwarding an estimate for Rs. 3,280 for executing special repairs to Koppa-Badagi road.

Resolution.—The Board resolved that funds are not available for allotment for this work.

XV. Read reports from the Amildars forwarding for the approval of the Board estimates for putting up two black boards at Rs. 10-11-0 each to the musafirkhanas at Birur and Kadur and notice boards to the third class travellers' bungalows at Hariharpur, Narve and Sringeri at Rs. 1-2-0 each.

Resolution.—Approved.

XVI. Read Koppa Amildar's report No. 565 of the 12th February 1906, forwarding the resolution of the Taluk Board suggesting the desirability of constructing a musafirkhana at Begar.

Resolution.—The Board is of opinion that there is no necessity for the present.

XVII. Read yadi No. 7, dated 9th July 1905, from the Divisional Assistant Commissioner, recommending the opening of a ferry at Madaba in the Yedahalli Sub-Taluk. Read also docket No. 48, dated 14th February 1906, from the Executive Engineer, Kadur Division, stating the private doni at the Tunga crossing at Madaba near Konakere in the Yedahalli Sub-Taluk is used only by a private raiyat who lives on the other side of the river and that it is not important or remunerative to be taken any notice of by the District Board.

Resolution.—As remarked by the Executive Engineer, there is no necessity for maintaining the doni at Government cost.

XVIII. Read Government Order No. 7027-35—L. B. (275-05)-2, dated 6th January 1906, requesting to obtain and forward the resolution of the District Board in the matter of paying rewards to patels for keeping their villages clean and tidy.

Resolution.—The Board is of opinion that it is not desirable to award any prizes, as most of the patels of this district are well to do persons and are not likely to care for the competition to obtain prizes in the shape of small sums.

XIX. Read Secretary's Official Memorandum No. 7352—Ml. (377-05)-2, dated 16th January 1906, forwarding for disposal the petition of K. Tirumalachar praying for the grant of scholarship to study in the Karnataka Vaidyasala in Mysore.

Resolution.—The Board desires to know whether any students are undergoing training in Mysore and what amount of scholarship is granted to students and the period for which the scholarship is to be granted.

XX. Read para 7 of the resolution of the District Board dated 20th December 1905, directing to allot Rs. 837 for the well work at Kerehosahalli in the Tarikere Taluk in the ensuing year's budget.

Resolution.—As most of the works of urgent nature have been deferred for want of funds the Board regrets its inability to provide any funds at present for this work also.

XXI. Read yadi No. 193, dated 18th February 1906, from the Divisional Assistant Commissioner, forwarding Koppa Amildar's report No. 524, dated the 14th February 1906, and requesting orders as to whether the ferries in the Koppa Taluk should be sold annually as usual or once every three years.

Resolution.—The Board resolved to sell the ferries once in three years.

XXII. Messrs. Srinivasa Rao and Watson brought to the notice of the Board that some of the estate roads now maintained from District Funds are purely used by the planters alone and the local cess paid by them is quite out of proportion to the amount spent from District Funds on account of their roads, and suggested the investigation of the matter with a view to decide which of the roads are used by the public and have therefore to be maintained from District Funds.

Resolution.—The Board being of opinion that the matter is one deserving of consideration, appointed a sub-committee consisting of—

1. The Executive Engineer,
2. The Divisional Assistant Commissioner,
3. The District Medical Officer,
4. Mr. Watson,
5. Mr. C. Srinivasa Rao,

for the submission of a report after enquiry.

XXIII. Read the explanatory notes on the budget estimates of District Fund receipts and expenditure for 1906-07, as prepared by the Finance Committee. The following is an abstract of the estimate:—

	Rs.
1. Estimated opening balance on 1st July 1906	5,593
2. Receipts for 1906-07	59,580
Total ...	65,173
3. Estimated expenditure—	
A. Works to be executed by P. W. D.	30,994
B. Civil Department	3,334
C. Civil Charges	23,395
Total ...	57,723
Estimated closing balance ...	7,450

Resolution.—The Board approves of the modified draft budget with the observation that most of the works of an urgent nature have had to be deferred for want of funds.

XXIV. Resolved that the next meeting be held on the 28th May 1906.

M. CHENGIAH CHETTY, *President.*

BANGALORE CITY MUNICIPALITY.

Notice, dated the 14th April 1906.

The following cast-iron lamp-posts and lanterns are available for sale in the Bangalore City Municipality:—

Serial No.	Description	Height		Per	Rate			Number available
		Feet	Inches		Rs.	a.	p.	
1	Plain pillar with short bottom	7	10	Each ...	9	0	0	37
2	Do with long bottom	7	10	Do ..	11	4	0	13
3	Fluted pillar, circular base, light	10	...	Do ...	12	12	0	60
4	Do do heavy	9	6	Do ...	18	12	0	12
5	Do do extra heavy	10	...	Do	21	12	0	5
6	Do . octagonal base	9	6	Do ...	18	0	0	183
7	Plain pillar, square pedestal	9	6	Do	22	8	0	19
8	Semi-fluted and plain-pillar	9	9	Do ...	15	12	0	23
9	Large, ornamental pillar for single lamps	8	10	Do ...	22	8	0	15
10	Lanterns, second-hand	...	...	..	1	12	6	200

N. B.—Delivered free at the Railway Station, packing charges and risk of breakage to be borne by purchasers.

Item No 6 Fluted Pillar (octogonal Base)

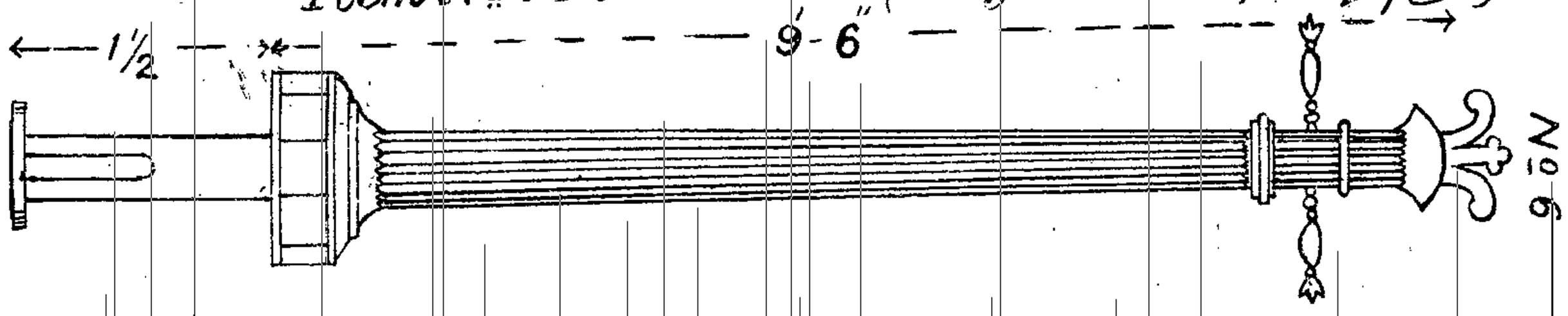

Item No 9 Large ornamental Pillar for single lamps.

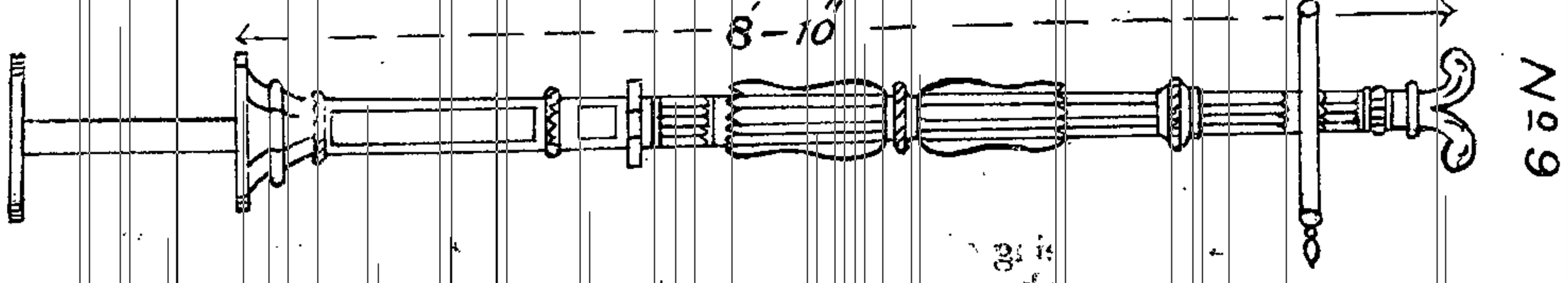

Item No 7 Plain Pillar square Pedestal

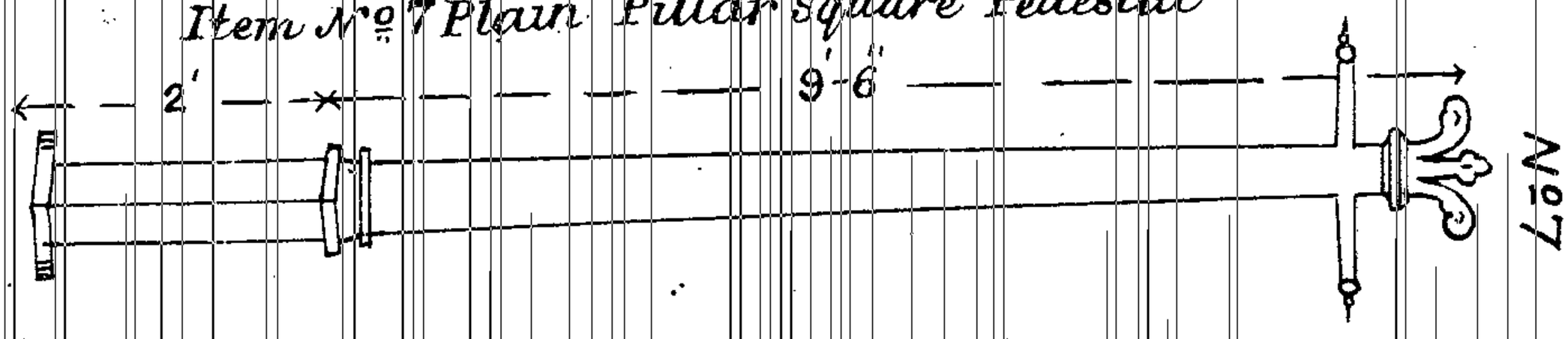

Item No 1 Plain Pillar

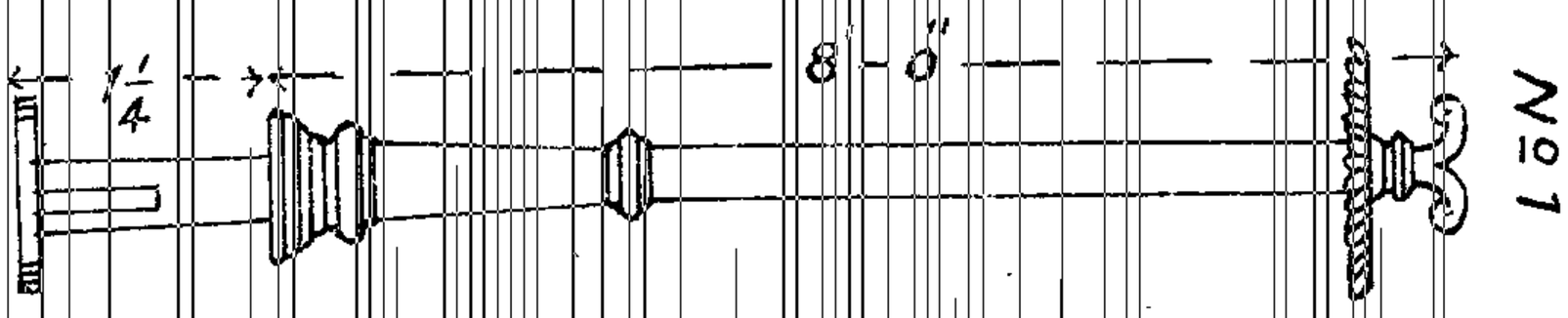

Item No 2 Plain Pillar with long bottom

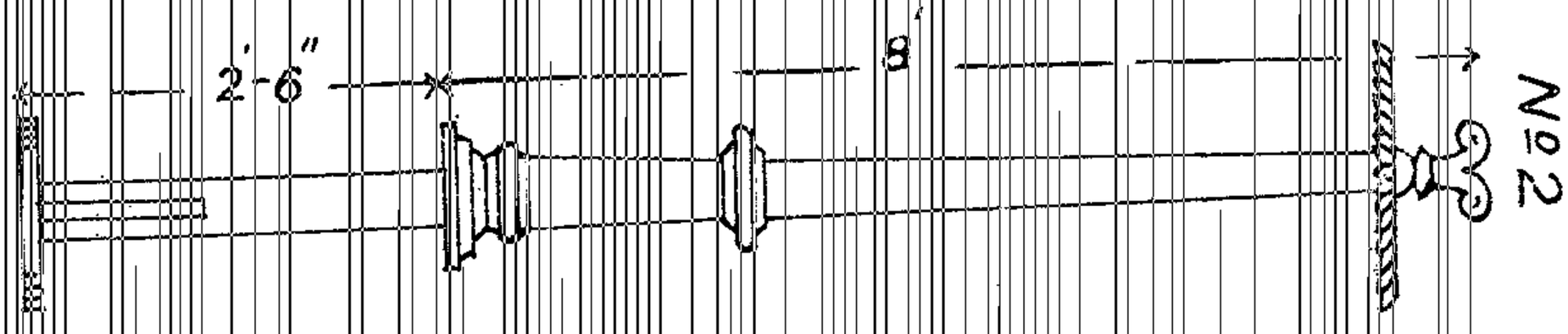

Item No 8
Semi Fluted and Plain Pillar

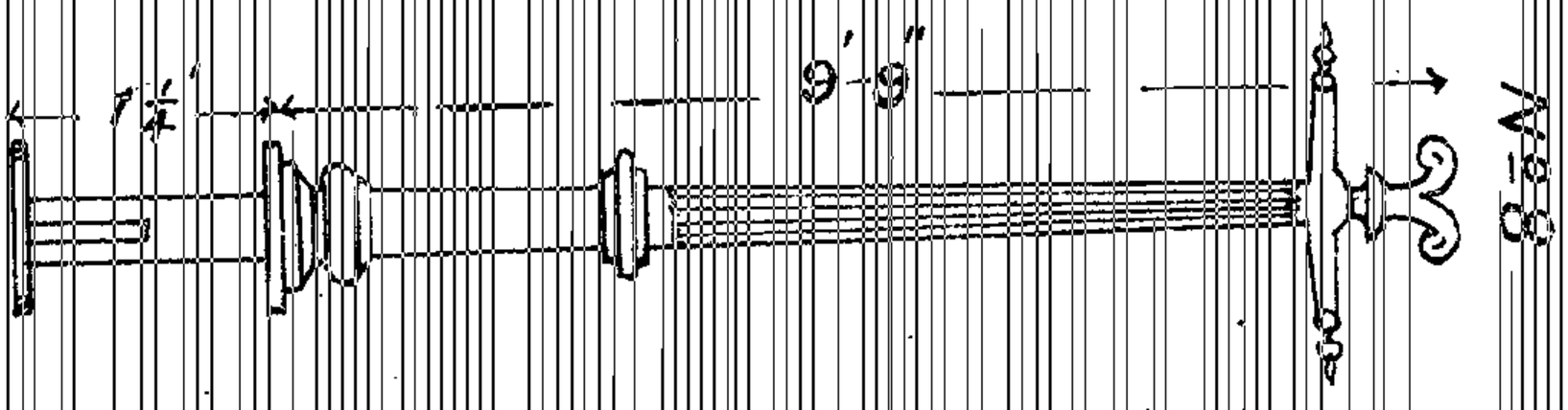

No 3 Fluted Pillar circular base (light)

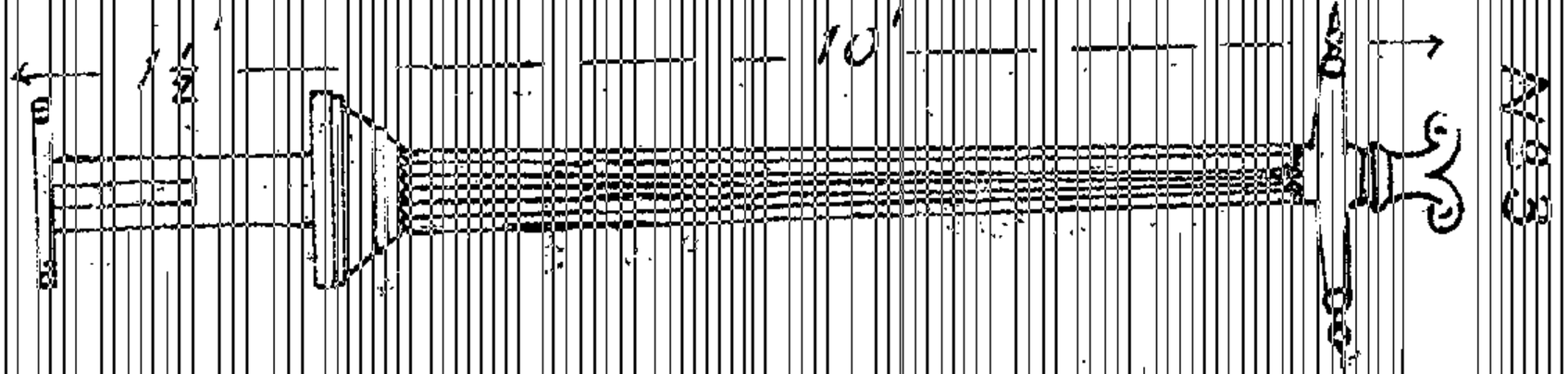

MYSORE CITY MUNICIPALITY.

Notice dated 12th May 1906.

The following business will be transacted at the Ordinary Meeting of the Municipal Commissioners for the City of Mysore, to be held in the Rangacharlu Memorial Hall at 8 A.M., on Saturday the 26th May 1906 :—

Subjects.

I. Consideration of accounts of receipts and expenditure with the auditor's report and other statistics for April 1906, and Comptroller's audited accounts for January and February 1906.

II. Government Proceedings No. 11208-10—Ml. (236-05)-12, dated 30th April 1906, informing that the countergrading of the Purnaiya's nalla may be carried out by the Trust Board after making provision for the work in the next year's budget of that Board.

III. Government Proceedings No. 13049-58—Leg. 21-05, dated 1st May 1906, about the temporary introduction of compulsory vaccination to such large and important centres as Bangalore, Mysore, etc.

IV. Vice-President's memo dated 30th April 1906, regarding the removal of Chika Holageri which is only a few yards from the old Dodda Holageri recently removed by the Trust Board.

V. Government Proceedings No. 10959-63—Ml. (85-05)-10, dated the 25th April 1906, authorizing the Comptroller to pay Revd. Sawday of the Wesleyan Mission, the building grant of Rs. 25,000 sanctioned in Government Proceedings No. 4283-9—Ml. (35-05)-2, dated 8th January 1906, for the Mission Hospital for women and children now under construction in the Mysore City.

VI. Results of auction sales for the year 1906-07, of toll-gate contract, market daily fees, sale of grass, manure and amarayi, etc.

VII. Remission statement of irrecoverable arrears of house and mohatarfa taxes on account of death, desertion and poverty, etc.

VIII. Municipal Commissioners Messrs. M. C. Rangaiengar and others' proposition to the effect that the members of the Board have a right, in accordance with the provision contained in Section 11 of the Municipal Regulations, to ask the Municipal executive as to how the complaints brought by one subordinate against another have been enquired into.

C. VENKATA RAO, for *President.*

MYSORE CITY IMPROVEMENT TRUST BOARD.

PROCEEDINGS OF AN ORDINARY MEETING OF THE BOARD OF TRUSTEES, FOR THE IMPROVEMENTS OF THE CITY OF MYSORE, HELD AT THE CHAIRMAN'S OFFICE ON WEDNESDAY THE 25TH APRIL 1906.

Mr. D. Sitarama Rao, Chairman.

Trustees.

PRESENT.

Dr. P. S. Achyuta Rao.
Mr. C. Venkata Rao.
„ Mohamed Jaffer Sahib.
„ M. Venkatakrishnaiya.
„ M. C. Rangaiengar.
„ M. Anantharajaiya.

ABSENT.

Mr. E. Maconochie, I.C.S.

Subject.	*Resolution.*
I. Budget estimates of the Mysore City Improvement Trust Board for 1906-07.	The budget estimates of the Mysore City Improvement Trust Board for 1906-07 are approved and passed.

Subject.	*Resolution.*
II. Government Proceedings No. 10118—Ml. (458-05)-2 of 30th March 1906, passing orders regarding the first increment of Rs. 20 to Mr. H. F. Marker, No. III Sub-Division Officer.	Read Government Proceedings No. 10118—Ml. (458-05)-2 of 30th March 1906, regarding increment to Mr. H. F. Marker. Resolved that as the formation of the new Doddaholagere and the acquisition of the old Doddaholagere have not been completed, nor are they likely to be completed for another two years on account of the limited funds that can be made available for the works, the retention of No. III Sub-Division for another two years at least is absolutely necessary. Besides Mr. Marker has been put upon the Drainage works on account of his special aptitude for that class of work, having graduated in Sanitary Engineering. The Board consider that his services be retained, and the increment recommended be sanctioned.
III. Letter dated 1st April 1906, from the Honorary Secretary, Maharani's College, Mysore, asking for a site for building quarters for out-station students who come to attend the College. * Site No. 1 near the Hindu visitors' quarters. Do 2 adjoins the Dewan's bungalow on the Krishnavilas road. Do 3 on the Krishnavilas road opposite to the Dewan's bungalow. Do 4 and 5 on the Chamaraj road near the Sitavilas Dharmasala.	Read the Honorary Secretary's D. O. dated 1st April 1906. Resolved that he be informed that, in the opinion of the Board, the sites marked on the plan attached are suitable, of which sites *Nos. 1 and 2 are the properties of Government, and the sanction of Government for their grant should be applied for; and sites Nos. 3, 4 and 5 are private properties, and their acquisition will be necessary if any of them is required.
IV. Docket No. 401 of 31st March 1906, from the Executive Engineer, Mysore Division, regarding the site required within the Municipal limits of Mysore for locating the proposed buildings for Normal School and Students' Homes, etc.	Read docket No. 401, from the Executive Engineer, Mysore Division. Resolved that a Sub-Committee consisting of the Chairman, District Medical and Sanitary Officer and the Vice-President of the Municipality do inspect the available sites and submit their opinion to the Board at the next meeting.
V. Application of late Chabumeah's two sons Abdul Aziz and Mahomed Massud, soliciting permission to raise a mantap over the grave of the late Chabumeah and also asking for a ground measuring 60′ × 100′ for building a "Khankhana" on the Mahomedan burial ground near the Jail. Application dated 4th April 1906, from Mr. Mir Kamaludin Ali Khan for a piece of land measuring 30′ × 30′ for grave at the burial ground.	Read application from the late Chabumeah's two sons and Mr. Kamaludin Ali Khan. Resolved that the same be referred to a Sub-Committee consisting of the Chairman, District Medical and Sanitary Officer, Mr. Mahomed Jaffer Sahib, and the Vice-President of the City Municipality for inspection and report.
VI. Estimate amounting to Rs. 417 for constructing a stepped revetment on the north-west side of the Dodkere tank.	The estimate for Rs. 417 is approved.

D. SITARAMA RAO,
Chairman.

MYSORE JAIL.

Notification dated 1st May 1906.

Notice is hereby given that sealed tenders will be received up to 9 A.M. on Saturday the 16th June 1906, by the Superintendent of the Mysore Jail, for the supply, by contract, of the following articles of rations required for the use of the prisoners confined in the Mysore Jail, from 1st July 1906 to 30th June 1907, both days inclusive.

2. No tenders will be received after the date abovementioned.

3. Tenders to be superscribed separately as follows :—

Tenders for the supply of "No. I. grains, condiments and other necessaries." "No. II. mutton."

4. No tenders will be received unless accompanied by a deposit of Rs. 400 for grain, condiments and other necessaries, and Rs. 100 for mutton in cash or currency notes.

5. Tenders will be opened by the Superintendent of the Mysore Jail at his office on the date and hour abovenamed, in the presence of such tenderers as may choose to attend.

6. All tenders must specify the rates at which the following articles can be supplied in pound-weight, per rupee, and all articles supplied to be of good quality. In the case of milk the number of pints per rupee should be mentioned.

List of articles required for twelve months.

Articles	Quantity required	Articles	Quantity required	Remarks
No. I. Grain, condiments, etc.—	lbs.	No. I. Grain, condiments, etc.—	lbs.	All articles to be of the 1st sort.
Rice (boiled and unboiled) ...	42,000	Gingelly oil	2,000	
Ragi	1,80,000	Vegetables	56,000	
Tuvar doll	14,000	Firewood	2,80,000	
Bullar doll	11,000	Sugar	600	
Curry powder	3,400	Sooji	700	
Salt	5,600	Bread	300	
Onions	5,600	Milk	8,000 Pints	
Garlic	600	Tyre	12,000 lbs.	
Tamarind (without seeds and fibre.)	5,600	No. II. Mutton—		
Ghee	1,200	Mutton (without bone) ...	12,000 lbs.	

The quantities stated above are not guaranteed.

7. The contractor will supply ragi grain to be ground by convicts, which will be issued as flour. The supply to be calculated and payment made upon the quantity of flour so issued at the rate of the ragi grain.

8. The Superintendent does not bind himself to accept the lowest or any tender, and he may reject any tender without assigning any reason for it.

9. The deposit of the successful tenderers will be retained and will be forfeited if they fail to execute the contract bond, a form of which could be seen at the Superintendent's office, or furnish security to the amount of Rs. 400 for grains, condiments and other necessaries, and Rs. 100 for mutton in cash or Government paper, within one week from the date of the acceptance of their contracts being made known to them.

10. No advance of cash will be made to the contractors. Payments for the articles supplied in a month will be made by the Superintendent as soon as possible by the 10th of the following month.

11. Store-rooms will be made over to the contractors in which they can keep all non-perishable articles, of which not less than one month's supply must always be in store. Perishable articles such as vegetables, etc., must be at the Jail by 7 A.M. daily.

12. This contract shall not be sublet.

13. A fine not exceeding Rs. 50 will be levied at the discretion of the Superintendent of the Jail for any infringement of the stipulations of the contract or for the supply of inferior articles, and, if frequently violated, the contract may be annulled and the security confiscated to Government.

14. The decision of the Superintendent will be final in all questions of infringements of contract.

15. If called upon to do so, the contractor will be bound to purchase vegetables, milk and other Jail produce required for the use of the prisoners, from the Jail at the contract rates.

16. Any further information can be obtained on applying at the Superintendent's office.

17. The contracts will be subject to the confirmation by the Inspector-General of Prisons in Mysore, who reserves to himself the right of rejecting all or any of the tenders.

18. In case the contractors, after taking the contracts, are not willing to carry out their agreement, they shall give at least one month's notice and shall forfeit the security money to Government.

19. The contractors will also be bound to make good to Government any loss which may arise from their failure or by Government having to purchase the articles specified in the contracts in the local markets at higher rates than those contracted for.

N. B.—No concession of any kind will be allowed in the above contracts. Any individual contractor may tender for all the articles in one tender, depositing the sum of Rs. 500 as security for the whole contract.

T. S. NANJAPPA,
Acting Superintendent.

MYSORE CITY TELEGRAPH OFFICE.

List of undelivered Messages for the week ending 14th May 1906.

Station.	Address.
Calcutta (Madrassa) ...	... Ramaswamy C/o Phillips Mudgara.
Madras (Sowcarpet) ...	... Madras Vadivelunaiker, Mochi Street.

MYSORE GOVERNMENT CENTRAL PRESS.

Dated 8th May 1906.

Notice is hereby given that old and unserviceable articles of the Government Central Press, as specified in the annexed list, will be sold by public auction on Friday the 15th June 1906, at 2 P.M., on the Press premises. The highest bidder at the auction shall pay the purchase money before the articles are removed :—

No.	Description	Quantity	Remarks
1	Ink roller stocks of sizes	10	
2	Broken writing tables, chairs, benches, etc.	1 lot	
3	Binder's table and roller racks	1 "	
4	Type cases	60	
5	Wooden galleys and type plates	70	
6	Compositors' stools	10	
7	Zinc galleys	19	
8	Litho polishing stone	1	
9	Do stone	1	
10	Palette knife	1	
11	Glue pot	1	
12	Wooden tubs, small	3	
13	Binders' knives	2	
14	Type-holders (binders')	2	
15	Glazed tissue boards, pieces	480	
16	Lubricators (tin)	6	
17	Wooden pumps	2	
18	Litho scraper	1	
19	"Honors" enumerators	3	
20	Paste kettles	2	
21	Aluminium kettle	1	
22	Iron pan	1	
23	Binders' laying presses	2	
24	Bench vice (large)	1	
25	Composing sticks	20	
26	Litho rollers	4	
27	Empty kerosene oil tins	180	
28	" ink tins	50	
29	" roller composition tins	40	
30	Bellows	2	
31	Cotton belting	70 feet	
32	Oil cans	4	
33	Caster's rubbing stone	1	
34	Hanging lamps	9	
35	Iron drums	2	
36	Brass rules, locks, etc., ...	1 lot	
37	Iron bars, springs, cams, locks, etc., ...	1 "	
38	Dealwood type cases	1 "	
39	Printing ink (of colors)	1 "	
40	Map varnish	2 tins	
41	Litho transfer paper	1 roll	
42	" retransfer ink	5 cakes	
43	" crayons	20 packets	
44	Leather pieces	1 lot	
45	Machine and press blankets, cloths, etc., ...	1 "	
46	Files	4	
47	Wooden casks	3	
48	Gelatine	25 lbs.	
49	Brushes, mallets, planers, etc.	1 lot	
50	Zinc tub	1	
51	Vaseloid	1 tin	
52	Guttapercha for machines	1 roll	
53	Type-casters' scrapers	3	
54	Punches (Sanskrit, Kanarese and Telugu)	1 lot	
55	Chases of sizes (broken)	1 "	

C. H. YATES,
Supt., Govt. Press.

MYSORE GOVERNMENT METEOROLOGICAL DEPARTMENT.

Daily Means of Observations for the Week Sunday 29th April to Saturday 5th May 1906.

No.	BANGALORE	Sunday 29	Monday 30	Tuesday 1 May	Wednesday 2	Thursday 3	Friday 4	Saturday 5
1	Barometer red. to 32° F.	26·864	26·875	26·879	26·859	26·862	26·858	26·881
2	Daily Barometric range	·130	·130	·138	·156	·155	·124	·126
3	Mean Dry Temperature in shade	84·7	82·7	82·5	83·5	82·9	83·8	83·7
4	Maximum do	98·0	96·6	95·0	96·0	96·4	98·9	97·5
5	Minimum do	72·6	70·9	72·0	71·8	71·0	69·8	70·8
6	Daily range of do	25·4	25·7	23·0	24·2	25·4	29·1	26·7
7	Mean Wet Temperature in shade	67·4	67·2	67·6	69·4	69·4	68·5	66·8
8	Minimum do	61·8	62·2	65·0	65·4	67·1	66·1	62·7
9	Pressure of Aqueous Vapour	·549	·556	·548	·571	·561	·507	·528
10	Humidity	47	51	49	46	49	42	46
11	Wind Vely. in Miles p. day to 8 A. M	174	189	164	137	161	145	176
12	Mean Wind Direction	S b E	N W b W	S E	N N E	S E	S E b E	S b E
13	Rainfall in inches to 8 A.M.	0	0	0	0	0	0	0
14	Total Rainfall from 1st January	1·73	1·73	1·73	1·73	1·73	1·73	1·73
15	Per cent of Cloudy Sky	7	80	67	47	60	67	60
16	Character of Weather	Fine	Distant lightning	Fine	Fine	Thunder-storm	Fine	Fine

MYSORE GOVERNMENT METEOROLOGICAL DEPARTMENT.

Daily Means of Observations for the Week Sunday 29th April to Saturday 5th May 1906.

No.	MYSORE	Sunday 29	Monday 30	Tuesday 1 May	Wednesday 2	Thursday 3	Friday 4	Saturday 5
1	Barometer red. to 32° F.	27·335	27·355	27·358	27·335	27·333	27·334	27·345
2	Daily Barometric range	·143	·144	·159	·178	·149	·123	·148
3	Mean Dry Temperature in shade	85·0	84·2	85·7	85·2	83·3	83·3	85·0
4	Maximum do	93·6	97·0	94·7	96·9	97·6	98·5	97·9
5	Minimum do	72·1	72·0	74·0	72·5	73·8	69·0	72·7
6	Daily range of do	26·5	25·0	20·7	24·4	23·8	29·5	25·2
7	Mean Wet Temperature in shade	70·2	71·4	71·5	72·1	71·5	71·9	70·1
8	Minimum do	67·4	68·6	68·8	68·7	70·3	68·4	68·1
9	Pressure of Aqueous Vapour	·563	·631	·668	·671	·643	·669	·592
10	Humidity	45	54	57	54	54	62	50
11	Wind Vely. in Miles p. day to 8 A.M.	205	277	197	201	230	203	203
12	Mean Wind Direction	S b E	S E	S E	S b E	E b N	S E b S	S b W
13	Rainfall in inches to 8 A.M.	0	0	0	0	0·01	0·09	0
14	Total Rainfall from 1st January	0·85	0·85	0·85	0·85	0·86	0·95	0·95
15	Per cent of Cloudy Sky	93	80	100	77	90	100	57
16	Character of Weather	Cloudy	Fine	Cloudy	Thunder-storm	Cloudy	Thunder-storm	Fine

1493

MYSORE GOVERNMENT METEOROLOGICAL DEPARTMENT.

Daily Means of Observations for the Week Sunday 29th April to Saturday 5th May 1906.

No.	HASSAN	Sunday 29	Monday 30	Tuesday 1 May	Wednesday 2	Thursday 3	Friday 4	Saturday 5
1	Barometer red. to 32° F.	26·810	26·821	26·837	26·804	26·808	26·800	26·819
2	Daily Barometric range	·108	·121	·130	·156	·150	·1[illegible]6	·127
3	Mean Dry Temperature in shade	78·7	81·4	78·3	80·6	81·9	82·7	83·3
4	Maximum do	97·0	96·8	90·8	96·2	97·2	100·2	98·4
5	Minimum do	64·8	68·2	67·5	67·5	69·2	67·4	69·0
6	Daily range of do	32·2	28·6	23·3	28·7	28·0	32·8	29·4
7	Mean Wet Temperature in shade	68·8	68·1	69·1	69·6	69·2	69·7	70·3
8	Minimum do	62·8	66·5	66·1	66·0	65·5	65·6	66·8
9	Pressure of Aqueous Vapour	·576	·549	·617	·596	·633	·569	·607
10	Humidity	48	51	59	50	59	46	51
11	Wind Vely. in Miles p. day to 8 A.M.	60	87	65	5	68	53	66
12	Mean Wind Direction	W S W	N b W	S S W	E b N	S E b S	E N E	E
13	Rainfall in inches to 8 A.M.	0	0·19	0	0	0·07	0	0
14	Total Rainfall from 1st January	0·03	0·22	0·22	0·22	0·29	0·29	0·29
15	Per cent of Cloudy Sky	60	53	90	57	87	57	47
16	Character of Weather	Sultry.	Thunde -storm	Cloudy	Distant thunder	Thunder-storm	Sultry	Sultry

1494

MYSORE GOVERNMENT METEOROLOGICAL DEPARTMENT.

Daily Means of Observations for the Week Sunday 29th April to Saturday 5th May 1906.

No.	CHITALDRUG	Sunday 29	Monday 30	Tuesday 1 May	Wednesday 2	Thursday 3	Friday 4	Saturday 5
1	Barometer red. to 32° F.	27·427	27·439	27·488	27·426	27·426	27·416	27·438
2	Daily Barometric range	·124	·131	·149	·159	·166	·134	·148
3	Mean Dry Temperature in shade	87·0	85·8	85·3	88·2	87·5	89·0	88·0
4	Maximum do	101·7	100·1	98·2	101·2	10[illegible]·5	102·8	102·1
5	Minimum do	73·4	72·8	73·9	75·8	75·2	76·6	75·2
6	Daily range of do	28·3	27·3	24·3	25·4	25·3	26·2	26·9
7	Mean Wet Temperature in shade	70·4	69·5	71·3	72·2	71·4	71·4	72·6
8	Minimum do	66·9	65·9	67·8	69·8	64·8	66·0	65·1
9	Pressure of Aqueous Vapour	·529	·568	·631	·589	·669	·645	·715
10	Humidity	38	46	50	42	50	47	56
11	Wind Vely. in Miles p. day to 8 A. M.	131	170	155	162	152	144	159
12	Mean Wind Direction	S W b S	N N W	N W b N	N E b N	S	N E b E	S b W
13	Rainfall in inches to 8 A. M.	0	0	0	0	0	0	0
14	Total Rainfall from 1st January	1·24	1·24	1·24	1·24	1·24	1·24	1·24
15	Per cent of Cloudy Sky	10	3	57	30	57	3	...
16	Character of Weather	Sultry	Dust haze	Fine	Sultry	Fine	Sultry	Sultry

Dated 10th May 1906.

B. N. GARUDACHAR, for *Director of Meteorology.*

Abstract Statement of Plague Cases and Deaths in the Mysore Province for the week ending Friday the 11th May 1906.

Place	During the week ending 11th May 1906		During the week ending 4th May 1906		Figures for the corresponding week of last year		Number of infected villages
	Attacks	Deaths	Attacks	Deaths	Attacks	Deaths	
Bangalore City	...	...	...	...	5	3	...
Mysore City	...	...	...	...	...	...	...
Bangalore District	...	...	...	...	9	4	..
Mysore District	1	1	...	...	9	3	1
Kolar District (excluding Gold Fields)	...	...	...	...	...	1	...
Kolar Gold Fields	1	1	...	...	4	3	1
Tumkur District	...	...	...	...	1	1	...
Hassan District	4	2	...	...	...	...	1
Chitaldrug District	...	...	1	1	...	...	1
Kadur District	...	...	...	...	3	1	...
Shimoga District	...	...	...	...	4	3	...
Total ...	6	4	1	1	35	19	4

P. PALPU, L.M.S., D.P.H.,
for *Offg. Sr. Surgn. & Sany. Comr., M. G.*

497

The Mysore Gazette.

VOL. 41.] PUBLISHED BY AUTHORITY. [No. 20.

BANGALORE, THURSDAY, MAY 17, 1906.

PART IV.

OFFICIAL PAPERS.

Season Report for the Week ending with the 19th Saturday in 1906 (12*th May* 1906).

District and Station.	Rainfall up to 8 A.M. on Saturday.					Price of food grains in seers per rupee and market fluctuations in prices of food grains.		
	This week.	Last ten years' average for the corresponding week.	Up to the end of the week from 1st January 1906.					
			This year.	Average of past ten years.	Excess (+) or defect (—) of column 4 compared with column 5.			
1	2	3	4	5	6	7		
	I. c	I. c.	I. c.	I. c.	I. c.		This week.	Past week.	Past ten years' fortnightly average.
							Seers	Seers.	Seers.
BANGALORE.									
Bangalore C. & M. Station ...	... 25	... ...	... 25	... ...	.. ...				
" City & Taluk...	... 10	1 14	1 99	3 58	— 1 59	Rice, 2nd sort.	6·50	6·50	9·36
Hoskote ...	... 19	1 1	.. 76	3 47	— 2 71				
Dodballapur ...	... ...	1 26	... 43	4 41	— 3 98	Ragi	17·00	17·00	23·10
Nelamangala ...	... 14	1 7	. 87	3 58	— 2 71	Kulthi	11·00	12·00	...
Kankanhalli ...	1 6	1 30	2 6	4 18	— 2 12	Kadale	8·00	8·00	10·20
Magadi ...	.. 4	.. 67	.. 4	2 64	— 2 60				
Channapatna ...	... 79	1 23	1 16	4 24	— 3 8				
Anekal ...	... 25	1 37	2 49	4 5	— 1 56				
Devanhalli ...	... ...	... 91	... 52	3 70	— 3 18				
Closepet ...	1 1	1 8	1 83	3 39	— 1 56				
District average...	... 37	1 10	1 21	3 72	— 2 51				
KOLAR.									
Kolar ...	... 48	... 53	1 3	2 97	— 1 94				
Bowringpet ...	... 12	... 5	... 57	2 29	— 1 72	Rice, 2nd sort.	7·00	7·00	9·25
Chintamani ...	... ...	... 29	1 ...	1 61	— 0 61				
Mulbagal ...	... ...	... 14	1 99	2 76	— 0 77	Ragi	16·00	17·00	23·90
Sidlaghatta ...	... ...	... 16	... 36	1 80	— 1 44	Kulthi	14·00	14·00	...
Chikballapur ...	.. ..	... 16	2 44	3 43	— 0 99	Kadale	9·00	9·00	9·10
Bagepalli ...	... ...	... 38	1 20	1 41	— 0 21				
Goribidnur ...	... 22	... 17	... 82	1 55	— 0 73				
Malur ...	.. 11	.. 35	1 45	2 77	— 1 32				
Srinivaspur ...	... 4	... 10	1 92	2 14	— 0 22				
Gudibanda ...	... 11	... 36	... 84	1 63	— 0 79				
District average...	... 10	.. 24	1 24	2 22	— 0 98				
TUMKUR.									
Tumkur ...	.. 22	1 19	1 42	3 49	— 2 7				
Maddagiri ...	... 43	... 63	... 71	1 89	— 1 18				
Chiknayakanhalli ...	... 10	1 35	1 50	3 45	— 1 95	Rice, 2nd sort.	7·50	7·50	9·20
Sira ...	... 16	... 56	1 53	2 28	— 0 75				
Gubbi ...	... 16	... 90	... 52	2 46	— 1 94	Ragi	16·00	16·00	26·10
Tiptur ...	... 41	1 13	... 61	3 28	— 2 67	Kulthi	12·00	12·00	...
Pavagada ...	... ...	.. 30	... ..	1 48	— 1 48	Kadale	8·00	8·00	9·35
Kunigal ...	... 17	.. 71	... 61	2 5	— 1 44				
Koratagere ...	... ...	... 74	1 10	2 1	— 0 91				
Turuvekere ...	... 85	... 58	1 42	2 9	— 0 67				
District average...	... 25	... 81	... 94	2 45	— 1 51				

District and Station.	Rainfall up to 8 A. M. on Saturday.						Price of food grains in seers per rupee and market fluctuations in prices of food grains.					
	This week.		Last ten years' average for the corresponding week.		Up to the end of the week from 1st January 1906.							
					This year.		Average of past ten years.		Excess (+) or defect (—) of column 4 compared with column 5.			
1	2		3		4		5		6		7	
	I.	c.	I.	c.	I.	c.	I.	c.	I.	c.		This week. Seers.	Past week. Seers.	Past ten years' fortnightly average. Seers.
MYSORE.														
Mysore ...	2	72	1	25	5	19	3	84	+1	35				
Chamrajnagar ...	...	...	1	1	...	22	5	22	—[illegible]	..				
Seringapatam ...	.	51	...	65	1	22	3	40	—2	18	Rice, 2nd sort.	8·00	8·00	10·36
Hunsur ...	2	35	...	73	2	84	3	69	—[illegible]	85				
Yedatore ...	1	26	...	69	3	19	3	55	—[illegible]	36	Ragi	14·00	14·00	21·43
Heggaddevankote ...	1	99	...	54	1	99	8	43	—[illegible]	44	Kulthi	12·00	12·00	...
Gundlupet ...	1	7	...	87	2	78	4	72	—1	94	Kadale	9·00	9·00	10·24
Nanjangud ...	...	35	1	23	1	60	4	62	—[illegible]	2				
T.-Narsipur ...	1	42	1	25	2	40	4	58	—2	18				
Malvalli ...	...	91	...	96	1	58	3	10	—1	52				
Mandya ...	...	55	...	78	2	64	2	87	—0	23				
Krishnarajpete ...	...	90	..	80	2	75	3	33	—0	58				
Nagamangala ...	...	72	...	82	2	10	3	12	—1	2				
District average...	1	15	...	89	2	34	4	19	—1	85				
HASSAN.														
Hassan ...	1	13	...	60	1	48	3	54	—2	6				
Manjarabad (Saklespur)	..	69	...	50	1	77	3	84	—2	7				
Arkalgud ...	1	8	...	80	3	78	3	40	+0	38				
Belur ...	...	40	...	56	2	40	4	40	—2	..	Rice, 2nd sort.	8·00	8·00	10·50
Channarayapatna ...	...	87	...	88	1	97	3	20	—1	23				
Arsikere ...	...	77	...	67	...	77	2	95	—2	18	Ragi	16·00	16·00	24·86
Hole-Narsipur ...	2	99	...	66	4	18	3	12	+1	6	Kulthi	11·50	12·00	...
Alur ...	1	7	...	76	1	93	3	81	—1	88	Kadale	8·00	9·00	10·15
District average...	1	22	...	68	2	29	3	53	—1	24				
SHIMOGA.														
Shimoga ...	3	80	...	69	4	74	3	46	+1	28				
Channagiri ...	1	7	...	59	1	27	2	37	—1	1	Rice, 2nd sort	7·75	8·00	12·24
Honnali ...	...	85	...	58	2	5	3	16	—1	11				
Shikarpur ...	...	38	...	64	...	38	2	97	—2	59	Ragi	14·00	14·75	30·37
Sorab ...	...	4	..	20	..	47	2	19	—1	72	Kulthi	11·50	11·50	...
Sagar ...	...	25	...	66	2	54	2	59	—0	5				
Nagar (Kallurkatte) ..	...	25	...	37	..	91	1	94	—1	3				
Tirthahalli ...	...	48	...	54	1	63	2	76	—1	13				
Kumsi ...	1	25	..	85	1	41	3	11	—1	70				
District average...	...	93	..	57	1	71	2	73	—1	2				
KADUR.														
Chikmagalur ...	...	26	..	62	2	13	3	92	—1	79				
Kadur ...	...	...	...	33	...	19	2	61	—2	42	Rice, 2nd sort	7·50	7·50	10·60
Tarikere ...	...	18	...	51	...	94	3	72	—2	78				
Koppa ...	1	52	..	60	4	21	3	37	+0	84	Ragi	15·00	15·00	23·60
Mudgere ...	...	15	...	84	1	43	4	84	—3	41	Kulthi	11·00	10·00	...
Yedahalli ...	1	43	.	58	1	83	3	66	—1	83	Kadale	8·00	8·00	9·90
Sringeri ...	1	12	...	68	2	15	3	61	—1	40				
District average ...	...	66	...	59	1	84	3	67	—1	83				
CHITALDRUG.														
Chitaldrug ...	...	90	...	30	2	12	1	76	+0	36				
Challakere ...	...	4		9	...	12	2	5	—1	93	Rice, 2nd sort	7·50	7·50	10·60
Hiriyur ...	...	11	...	29	...	30	1	76	—1	46				
Holalkere ...	..	35	.	20	...	55	2	42	—1	87	Ragi	14·00	15·00	27·60
Davangere ...	1	5	...	37	1	46	1	85	—1	39	Kulthi	11·00	11·00	...
Molakalmuru ...	...	...	...	47	...	44	1	76	—1	32	Cholum	13·00	14·00	24·30
Jagalur ...	..	38	...	36	...	90	1	91	—1	1	Kadale	8·00	7·00	10·60
Hosdurga ...	...	24	...	52	...	55	1	64	—1	9				
Harihar ...	1	63	..	23	4	57	2	6	+2	51				
District average...	..	52	...	31	1	22	1	91	—0	69				
Provincial average...	...	65	...	65	1	60	3	5	—1	45				

Note—Rice (husked)—Oryza Sativa.
Ragi—Eleusine Corocana.
Kulthi—(Horse gram) Dolichos Biflorus.
Cholum—Sorghum Vulgare.
Kadale—(Bengal gram) Cicer Arietinum.

499

DISTRICT REPORTS.

8. Markets how supplied.

9. Progress of agricultural operations, state of standing crops, prospects and probable outturn of harvests, serious damage done to crops by insects or other natural calamities.

10. Prospects of season, tracts in which the rainfall has been insufficient, areas affected by scarcity number of people under relief, and state of food stocks.

11. Public health.

12. Remarks as to the condition of agricultural stock, failure of pasturage, of fodder, etc.

BANGALORE CIVIL AND MILITARY STATION.

		Normal.	*Current.*	
Prices of food grains—	Rice ...	10 to 11	6½ to 7	seers per rupee.
	Ragi ...	25 to 30	16 to 16½	

Agricultural operation—Collection of manure.

Cattle are in good condition.

Water and fodder sufficient.

BANGALORE CITY AND TALUKS.

8. Market well supplied. Prices steady.

9. Standing crops are in good condition. Agricultural operations are almost at a standstill. Sugar-cane is reported to have been harvested in Dodballapur. Manure is being collected in the Nelamangala Taluk. Sugar-cane is being planted in parts of Dodballapur.

10. There has been about an inch of rain in Channapatna, Closepet and Kankanhalli, and very little in the other parts.

11. Public health generally good. Fever prevails in some parts of Hoskote, and small-pox in parts of Dodballapur and Anekal.

12. Cattle healthy. Dry fodder is available. Water is supplied from wells. In the following villages wells are reported to have been sunk during the week:—

Nine wells in Hoskote, nine in Nelamangala, six in Kankanhalli, twelve in Channapatna and two in Anekal. In three hoblis of Kankanhalli kattes are reported to have received about a month's supply of water.

KOLAR.

8. Market well supplied, but prices are very high.

9. Sugar-cane is being planted in Bowringpet and Chintamani. Paddy is being harvested in some parts of Sidlaghatta.

10. Prospects of the season hopeful. Rains are anxiously expected. Food stocks are available.

11. Public health generally good.

12. Cattle generally in good condition, but in parts of Sidlaghatta, Bagepalli and Gudibanda they are reported to be suffering from foot and mouth disease. Pasture in fields and grazing lands has been completely exhausted. Difficulty for water for men and cattle is gradually increasing.

TUMKUR.

8. Market well supplied.

9. Paddy in Tumkur, Maddagiri, Sira, Pavagada and Koratagere, cholum in Sira and sugar-cane in Gubbi and Kunigal are being harvested. Sugar-cane in Maddagiri and nat-ragi in Pavagada are sown. Standing Vaisakhi paddy and sugar-cane crops in Tumkur, Gubbi,

Koratagere and parts of Turuvekere are withering. Elsewhere they are in fair condition. The following is the probable outturn of crops harvested :—

Maddagiri—Paddy 8 to 12 annas, cholum 2 to 4 annas.

Pavagada—Paddy 4 annas.

Kunigal—Sugar-cane 8 annas.

Koratagere—Paddy 4 annas.

10. Prospects of the season not encouraging. Food stocks available for the present. Supply of water is diminishing all over the district. Mungar rains are anxiously awaited. As many as 250 persons in Tumkur, 347 in Maddagiri, 390 in Turuvekere, 110 in Chiknayakanhalli, 243 in Sira, 60 in Gubbi, 250 in Tiptur, 115 in Kunigal and 88 in Koratagere are finding employment in minor tank, Irrigation wells, District Fund wells and other works.

11. Public health generally good, except that small-pox prevails in parts of Tiptur. It is subsiding in Gubbi and Kunigal.

12. Cattle are showing signs of deterioration. Foot and mouth disease prevails in parts of Tumkur and Tiptur. In parts of Gubbi, Chiknayakanhalli, Sira and Tiptur date leaves are used as fodder for cattle. Cholum and kadale pretty extensively cultivated in tank beds provided some fodder for cattle. Temporary wells are being constructed in tank-beds, as also drinking water wells all over the district. Water in State Forests is also made available wherever needed. Permission has been granted to use as fodder, the leaves of avenue trees wherever it is found necessary.

MYSORE.

8. Market well supplied.

9. Standing sugar-cane, mulberry and cotton crops in parts of Chamrajnagar and Nanjangud; sugar-cane in parts of Nagamangala and Seringapatam; cholum, castor, togari and tadagani in parts of Gundlupet; mulberry, sugar-cane and kar-paddy in parts of T.-Narsipur; mulberry and sugar-cane in parts of Malvalli; and sugar-cane, black and green grams in parts of Krishnarajpete are reported to be pretty fair. Ragi, cholum, togari, sessamum, castor and tadagani are being sown in most of the taluks, as there was rain throughout the district except Chamrajnagar during the week. The probable outturn of mulberry and sugar-cane is estimated at 12 annas.

10. Prospects of the season encouraging. Recent rains have improved the condition. Food stocks sufficient for the present. There are none under relief.

11. Public health good throughout, but small-pox is reported to be still prevailing in parts of Heggaddevankote.

12. Cattle in parts of Heggaddevankote are reported to be suffering from foot and mouth disease. In other parts they are reported to be healthy. Fodder and water are available in limited quantities.

HASSAN.

8. Market fairly well supplied. Prices high.

9. Sugar-cane in Hassan, Belur, Channarayapatna, Hole-Narsipur and Alur; and paddy in Hassan and Manjarabad, are reported to be in a fair condition. More rain is wanted for sugar-cane and paddy in Arsikere. Land is being ploughed for sowing seeds. The probable outturn of sugar-cane in Hole-Narsipur is 8 annas.

10. Prospects of the season somewhat hopeful. More rain is, however, wanted in all parts. There are none under relief. Food stocks are sufficient for the present.

11. Public health generally good. Small-pox is reported to be prevalent in some parts of the district.

12. Cattle generally healthy, but foot and mouth disease exists in parts of Hole-Narsipur. Water and fodder are generally available except in parts of Arsikere and Channarayapatna where some difficulty is felt for them.

SHIMOGA.

8. Market well supplied. Prices high.

9. Good rain has fallen in Shimoga, Channagiri, Honnali and Kumsi during the week to enable raiyats to commence ploughing operations for raising paddy and dry crops. Kar-paddy

under the Sulekere tank in Channagiri and in the Taluks of Sagar and Nagar is in a fair condition in areas where water is available. The sugar-cane crop is reviving in Shimoga, and it is in a fair condition in areas where water is still available. Sugar-cane is now being planted under the Sulekere tank. The estimated out-turn of kar-paddy is 12 annas for Channagiri, 6 annas for sugar-cane and 8 annas for Nagar.

10. Food stocks are somewhat insufficient in parts of Shimoga, Shikarpur, Sorab and Kumsi, and are being imported from other parts. Rainfall has been insufficient in Shikarpur and other Malnad Taluks.

11. Public health generally good. Small-pox prevails in parts of Shimoga, Shikarpur, Sorab, Sagar and Tirthahalli.

12. Fodder supply is limited everywhere except in Sagar, Nagar and Tirthahalli. The recent rains are expected to help the springing up of pasturage in Shimoga, Channagiri, Honnali and Kumsi. Scarcity of water has somewhat diminished in Shimoga, Channagiri and Kumsi, but it is still on the increase in the malnad.

KADUR.

8. Market fairly well supplied.

9. Ploughing is begun in Koppa and Yedahalli, and it is finished in Mudgere. Ragi is being sown in parts of Chikmagalur, and paddy nurseries are being made in parts of Mudgere. The standing crops, namely, kar-paddy and sugar-cane in parts of Kadur and Chikmagalur, sugar-cane in parts of Tarikere and Yedahalli, and kar-paddy in parts of Koppa and Mudgere are in fairly good condition. Ploughing and other agricultural operations have been delayed for want of rain. There was somewhat copious rainfall on the 12th night which was general throughout the district. This and the rainfall during the week under report are highly encouraging.

10. Prospects of the season fair, but more rain is needed. Food stocks are available and sufficient for the present. There is no need at present for opening test or relief works.

11. Public health good, except that small-pox prevails in parts of Chikmagalur, Mudgere and Kadur.

12. Foot and mouth disease to cattle is reported to be subsiding. Water and fodder generally available. Water-supply in parts of Chikmagalur, Kadur, Tarikere and Yedahalli is scanty. Recent rains have somewhat improved the situations.

CHITALDRUG.

8. Market well supplied.

9. The outturn of crops harvested during the week is as follows:—

Davangere—Sugar-cane 4 annas.

Molakalmuru—Paddy 8 annas, onions 8 annas and navane 4 annas.

Lands are being prepared for sowing.

10. Prospects of the season encouraging. Food stocks available.

11. Public health good.

12. Cattle healthy. Water and fodder are still procurable in limited quantities.

BANGALORE,
16th *May* 1906.

B. K. VENKATA VARADA IYENGAR,
Secy. to the Govt. of H. H. the Maharaja of Mysore,
Gen. & Rev. Dept.

BEFORE THE GOVERNMENT OF HIS HIGHNESS THE MAHARAJA OF MYSORE.

Appeal No. 78 *of* 1905-06.

Appellant		*Respondent*
Hale Gowda	*Vs.*	Singe Gowda

Subject.

Claim to half the potgi allowance attached to the pateli office of Kadalagere in the French Rocks Sub-Taluk.

Facts of the case.

In 1889, the appellant and the respondent were appointed the Police and Revenue patels, respectively, of the village in question. In 1892, after the pakka potgi settlement, the question of the distribution of the potgi having arisen, the then Sub-Division Officer, Mr. Mahomed Ali, directed that the whole of the potgi allowance be paid to the Revenue patel, the respondent. Thereupon the appellant complained in 1897 and the then Sub-Division Assistant Commissioner, Mr. P. Srinivasa Rao, ordered in 1901 that the potgi should be divided equally between the appellant and the respondent. On appeal the Deputy Commissioner cancelled this order, holding that Mr. P. Srinivasa Rao had no jurisdiction to revise the order passed by his predecessor. On second appeal Government observed that the Deputy Commissioner, in reversing the Sub-Division Assistant Commissioner's order as above, did not adjudicate upon the point at issue, and in their Order No. R. 7451—Mis. 242-04-4, dated the 22nd February 1905, remanded the case to the Deputy Commissioner for disposal on the lines indicated in Government Order No. 10267-75—R. 1055, dated the 3rd January 1894. Thereupon the Deputy Commissioner upheld the order of Mr. Mahomed Ali passed in 1892. Hence this appeal.

Decision.

It is admitted that both are hakdar patels, one being appointed Revenue and the other Police patel. The question of the division of emoluments cropped up in 1892 after the settlement of the pakka potgi. The patels could not come to an amicable arrangement among themselves, and the Sub-Division Officer, French Rocks, directed the payment of the whole potgi to the respondent on the ground that he was the Revenue patel. Apparently there were no materials to decide the question on a consideration of the proportion of their respective shares in the pateli hak. The Revenue patel did not adduce any evidence to prove that he was entitled to the full amount of the potgi to the exclusion of the Police patel. Under the circumstances there is no justification for the order of the Sub-Division Officer of 1892 which was subsequently confirmed in appeal by the Deputy Commissioner Mr. Sparkes. The more equitable decision, having regard to the circumstances of the case, is to divide the potgi equally between the two patels, Revenue and Police. The order appealed against is reversed and the appeal allowed.

No. R. 14564—*R. M.* 228-05-4, *dated* 11*th May* 1906.

Copy forwarded to the Deputy Commissioner of the Mysore District, together with the records received with his letter No. 725, dated 8th January 1906.

B. K. VENKATA VARADA IYENGAR,
Secy. to Govt., Gen. & Rev. Dept.

Prices-Current [*Retail*] of Food Grains and Salt in the Mysore State during the fortnight ending the 30th April 1906.

Quantity per rupee in seer of 80 tolas, *vide* Government of India No. 1—21, dated 10th February 1874.

Fortnight ending.	No.	District.	Wheat.						Barley.						Rice, best sort.						Rice, common.						Javar or cholam (*Sorghum valgare*).						Bajra or kambu (*Pennisetum typhoideum.*)						Marua or ragi (*Eleusine Corocana.*)					
			Present return.		Next preceding return.		Corresponding return of last year.		Present return.		Next preceding return.		Corresponding return of last year.		Present return.		Next preceding return.		Corresponding return of last year.		Present return.		Next preceding return.		Corresponding return of last year.		Present return.		Next preceding return.		Corresponding return of last year.		Present return.		Next preceding return.		Corresponding return of last year.		Present return.		Next preceding return.		Corresponding return of last year.	
	1	2	3		4		5		6		7		8		9		10		11		12		13		14		15		16		17		18		19		20		21		22		23	
			S.	c.	S.	c.	S.	c.	S.	c.	S.	c.	S.	c.	S.	c.	S.	c.	S.	c.	S.	c.	S.	c.	S.	c.	S.	c.	S.	c.	S.	c.	S	c.	S	c.	S.	c.	S.	c.	S.	c.	S.	c.
30th April 1906.	1	Bangalore.	10	4	10	9	12	5	*	*	*	*	*	*	6	14	7	12	8	10		12	8	10	10	6	*	*	*	*	*	*	*	*	*	*	*	*	17	8	18	8	18	0
	2	Kolar ...	8	0	8	0	10	0	8	0	8	0	10	0	7	0	7	0	8	0	7	8	7	8	9	0	*	*	*	*	*	*	*	*	*	*	*	*	15	0	15	0	20	0
	3	Tumkur ...	7	0	7	0	10	0	7	0	7	0	10	0	6	8	6	8	8	8	8	0	8	0	9	0	16	0	16	0	21	0	*	*	*	*	*	*	18	0	18	0	20	0
	4	Mysore ...	6	4	6	4	10	8	6	4	*	*	*	*	7	0	7	0	9	2	8	0	8	4	10	11	12	8	13	0	22	8	*	*	*	*	*	*	15	0	15	0	18	0
	5	Hassan ...	7	7	8	0	10	0	7	8	8	0	10	0	7	8	7	8	9	0	8	0	8	0	10	0	*	*	*	*	*	*	*	*	*	*	*	*	16	0	16	0	20	0
	6	Shimoga...	7	6	7	6	11	9	*	*	*	*	*		6		7	6	8	6	7	6	8	6	11	9	12	10	14	11	23	2	*	*	*	*	*	*	14	11	16	13	23	2
	7	Kadur ...	8	0	8	0	10	0	11	0	11	0	11	0	7	0	7	0	8	0	8	0	8	0	10	0	17	0	17	0	23	0	*	*	*	*	*	*	16	0	16	0	19	0
	8	Chitaldrug	8	0	8	0	12	0	8	0	8	0	12	0	7	0	7	0	9	0	8	0	8	0	10	0	13	0	13	0	24	0	16	0	16	0	24	0	15	0	15	0	24	0
		Average...	7	13	7	14	10	13	7	15	8	6	10	10	6	14	7	2	8	7	7	13	8	1	10	1	14	4	14	12	22	11	16	0	16	0	24	0	15	14	16	5	20	4

* Article not available.

503

Prices-Current [*Retail*] of Food Grains and Salt in the Mysore State during the fortnight ending the 30th April 1906—*concluded*.

Quantity per rupee in seer of 80 tolas, *vide* Government of India No. 1—21, dated 10th February 1874.

Fortnight ending.	No.	District	Kangni or kakum Italian millet (*Setaria Italica.*)						Gram, chonna, chola, kadale or sunage (*Cicer Arietinum.*)						Indian-corn or maize (*Zea Mays.*)						Arhar or Thur-cadjan pea (*Cajanus Indicus.*)						Arhar Dal.						Salt.						Remarks
			Present return.		Next preceding return.		Corresponding return of last year.		Present return.		Next preceding return.		Corresponding return of last year.		Present return.		Next preceding return.		Corresponding return of last year.		Present return.		Next preceding return.		Corresponding return of last year.		Present return.		Next preceding return.		Corresponding return of last year.		Present return.		Next preceding return.		Corresponding return of last year.		
			24		25		26		27		28		29		30		31		32		33		34		35		36		37		38		39		40		41		42
			S.	c.	S.	c.	S.	c.	S.	c.	S.	c.	S.	c.	S.	c.	S.	c.	S.	c.	S.	c.	S.	c.	S.	c.	S.	c	S.	c.	S.	c.	S.	c.	S.	c.	S.	c.	
30th April 1906.	1	Bangalore	*	*	*	*	*	*	8	6	8	6	12	1	3 maizes for 4 pies.		3 maizes for 4 pies.		3 maizes for 4 pies.		15	12	15	12	12	15	8	8	8	8	8	8	14	15	14	15	12	10	
	2	Kolar ...	*	*	*	*	*	*	9	0	9	0	10	0	*	*	*	*	*	*	*	*	*	*	*	*	9	0	9	0	8	0	15	0	15	0	12	0	
	3	Tumkur ..	*	*	*	*	*	*	9	0	9	0	10	0	*	*	*	*	*	*	12	0	12	0	13	0	8	0	8	0	8	0	12	0	12	0	12	0	
	4	Mysore ...	*	*	*	*	*	*	9	8	9	0	12	1	*	*	*	*	*	*	12	4	13	0	13	2	10	0	10	8	7	5	15	0	13	0	14	11	
	5	Hassan ..	*	*	*	*	*	*	8	0	8	0	11	0	*	*	*	*	*	*	10	0	11	0	11	0	8	0	8	0	8	0	14	0	12	0	12	0	
	6	Shimoga ..	*	*	*	*	*	*	7	6	7	6	12	1	*	*	*	*	*	*	12	10	12	10	*	*	8	6	8	6	8	15	16	13	16	13	14	11	
	7	Kadur ...	*	*	*	*	*	*	8	0	8	0	11	0	*	*	*	*	*	*	12	0	12	0	12	0	9	0	9	0	8	0	14	0	14	0	12	0	
	8	Chitaldrug	20	0	20	0	30	0	8	0	8	0	12	0	*	*	*	*	*	*	14	0	14	0	14	0	8	0	8	0	9	0	10	0	10	0	10	0	
		Average ..	20	0	20	0	30	0	8	6	8	5	11	4	3 maizes for 4 pies.		3 maizes for 4 pies.		3 maizes for 4 pies.		12	11	12	15	12	11	8	10	8	11	8	3	14	1	13	9	12	8	

* Article not available.

GOVT. OF H. H THE MAHARAJA OF MYSORE, GENL. AND REV. SECRETARIAT,
Dated Bangalore, the 14th May 1906.

By Order,
B. K. VENKATA VARADA IYENGAR,
Secy. to Govt., Gen. & Rev. Dept.

The Mysore Gazette.

Vol. 41.] PUBLISHED BY AUTHORITY. [No. 21.

BANGALORE, THURSDAY, MAY 24, 1906.

☞ Separate paging is given to the Parts in order that they may be filed as distinct compilations.

CONTENTS.

PART I.—Notifications by the Government of His Highness the Maharaja of Mysore.

PART II.—Notifications by the Government of India; The Hon'ble the Resident in Mysore; Chief Judge; Survey and Inam Superintendent; Comptroller; Chief Engineer; Mysore State Railway; Amrut Mahal Department; Inspector-General of Registration; Senior Surgeon; District and Sessions Judges; Sub-Judges; Deputy Commissioners of Districts; Forest Officers; Presidents, Bangalore and Mysore City Municipalities; Season Reports; Mortuary and Meteorological Statements; Postal Notices; Civil and Military Station Notifications, &c.

PART III.—Legislative Measures and Rules thereunder.

PART IV.—Official Papers.

PART I.

Notifications by the Government of His Highness the Maharaja of Mysore.

GENERAL AND REVENUE.

No. 12042—*San.* (7-05)-155, *dated 22nd May* 1906.

The following Notification of the Madras Government received with the 1st Assistant Resident's endorsement No. 574, dated the 11th May 1906, is republished for general information:—

Whereas the Governor in Council is satisfied that there is danger of an outbreak of plague at Tiruvallur in the Tiruvallur Taluk of the Chinglepet District, if persons from the Districts of North Arcot, South Arcot, the Madras City and the Mysore State are permitted to visit that place on the occasion of the ensuing Ani New Moon and floating festival of Sri Viraraghavaswami:

In exercise of the powers delegated to him under the Epidemic Diseases Act, 1897, the Governor in Council prohibits the attendance at the said festival from the 13th to the 23rd June 1906, inclusive, of persons from the said parts, and further directs that between the said dates no tickets to travel by railway shall be sold at the stations of Madras, Madras Beach, Royapuram, Washermanpet, Vyasarpadi, Perambur, Villivakkam, Ambattur, Tondiarpet, Tiruvottiyur and Korukkupettai on the Madras Railway and of Chittur, Tandarai, Tiruvannamalai and Agaram Sibbandi on the South Indian Railway to the stations of Timmanur, Sevvapet road, Tiruvallur, Kadambattur, Manur and Tiruvalangadu on the Madras Railway to persons intending or believed to be intending to be present.

All persons proceeding to the said festival in contravention of this notification will be turned back.

No. 12043—*San.* (7-05)-156, *dated 22nd May* 1906.

The following Notification of the Madras Government received with the 1st Assistant Resident's endorsement No. 576, dated the 11th May 1906, is republished for general information:—

Whereas the Governor in Council is satisfied that there is danger of an outbreak of plague at Chidambaram in the Chidambaram Taluk of the South Arcot District, if persons from the

Bellary, Salem, Coimbatore and North Arcot Districts, the Tiruvannamalai Taluk of the South Arcot District, the Mysore State and other parts declared to be infected with plague, are permitted to visit that place on the occasion of the ensuing Ani Tirumanjanam festival :

In exercise of the powers delegated to him under the Epidemic Diseases Act, 1897, the Governor in Council prohibits the attendance at the said festival from the 13th to the 29th June 1906, inclusive, of persons from the said parts, and further directs that between the said dates no tickets to travel by railway shall be sold within the District of Bellary, and at the railway stations of Gudupally, Kuppam, Mulanur, Patchur, Karaimadai and Mettupalaiyam on the Madras Railway and of Chittur, Tiruvannamalai, Agaram Sibbandi and Tandarai on the South Indian Railway for the stations of Porto Novo, Killai, Chidambaram and Coleroon on the South Indian Railway to any person intending or believed to be intending to be present.

All persons proceeding to the said festival in contravention of this notification will be turned back.

No. 11335—*Med.* (247-05)-2, *dated 2nd—4th May* 1906.

Under clause (1) of Section 2 of Regulation No. I of 1906, it is hereby declared that vaccination shall, from and after the date of this notification and for a period of six months, be compulsory in the local area within the control of the Sanitary Board of the Kolar Gold Fields.

2. The Sanitary Board is hereby empowered to make bye-laws with the approval of Government for carrying out the purposes of the Regulation.

No. 11876—*Ml.* (310-05)-9, *dated 18th May* 1906.

Under Section 6 of the Land Acquisition Regulation No. VII of 1894, it is hereby declared that the lands described hereunder are required for a public purpose, *i. e.*, for sewage pipe line in the outfall of Chamrajpet drainage, Bangalore City :—

Taluk—Bangalore.
Hobli—Bangalore.
Village—Formerly Guttahalli now Chamrajpet.
Name of Khatedar—Ramasesha Sastri, Headmaster, Girls' School.
Survey No.—Nil.
Particulars of land—Vacant house site.
Land required for the pipe line—Length 108 ft., breadth 3 ft.
Boundaries—
East—Audimula Mudaliar's house site.
West—Ramasesha Sastri's vacant house site.
North—4th Main road.
South—Mr. Anantasami Rao's vacant site and halla.

No. 11959—*Ml.* (281-05)-5, *dated 21st May* 1906.

Under Section 6 of the Mysore Land Acquisition Regulation, VII of 1894, it is hereby declared that the undermentioned land in the Krishnarajpete village of the Krishnarajpete Taluk of the Mysore District, is required for a public purpose, *viz.*, for extending the town of Krishnarajpete :—

District—Mysore.
Taluk—Krishnarajpete.
Hobli— Do
Village— Do
Name of Khatedar—Kala *bin* Puttabora
Name of owner—Kala *bin* Puttabora.
Particulars of land—
Survey No.—129.
Area—Dry, 4 acres and 26 guntas.
Assessment—Rs. 5-8-0.
Boundaries—
East—Taluk Cutcherry.
West—Town site.
North—Town site.
South—Survey No. 1.

No. R. 13987—*L. R.* 434-05-6, *dated* 27—28*th April* 1906.

In supersession of Notification No. R. 9887—L. R. 434-05-3, dated the 23rd January 1906, published on page 64 of Part I of the *Mysore Gazette*, dated the 1st February 1906, and under Section 6 of the Land Acquisition Regulation No. VII of 1894, it is hereby declared that the land hereunder mentioned is required for a public purpose, *viz.*, for improving the Honnali-Basavapatna road ; and under Sections 7 and 3 (c) of the aforesaid Regulation, the Assistant Commissioner in charge of the Honnali group of taluks is authorized to take order for the acquisition of the said land :—

District—Shimoga.
Taluk—Channagiri.
Hobli—Basavapatna.
Village—Sringarabag.
Name of Khatedar—Siddalinga, son of Bharamajja.
Survey No.—61, Part 3.
Particulars—Dry.
Total extent—39 guntas.
Assessment—Re. 0-14-0.
Extent required—39 guntas.
Boundadries—
East—Land belonging to Ranga.
West—Old road leading to Honnali.
North—Village site.
South—Lane connecting the road leading from Hosakere to Honnali.

No. R. 14133—*L. R.* 635-05-3, *dated 3rd May* 1906.

Under Section 6 of the Land Acquisition Regulation, No. VII of 1894, it is hereby declared that the land described hereunder is required for a public purpose, *viz.*, for inclusion in the bed of the Kurodi tank; and under Sections 7 and 3 (*c*) of the said Regulation, the Assistant Commissioner in charge of the Chikballapur group of taluks is authorized to take order for the acquisition of the said land :—

District	Taluk	Hobli	Village	Name of khatedar	Survey No.	Total		Assessment		Extent now required		Boundaries			
												East	West	North	South
						A.	g.	Rs. a. p.		A.	g.				
				Appaiyachari	67	1	8	6 0	0	0	24	Survey No. 66 ..	Survey No. 77 ...	Survey Nos. 71-68 ...	Survey No. 78
				Do	70	1	10	6 0	0	1	10	Do 69 ...	Do 71 ...	Tank ...	Do 71
				Chikkathimma	67	1	8	5 12	0	0	24	Do 66 ...	Do 77 ...	Survey No. 71-68 ...	Do 78
				Do	76	0	37	2 4	0	0	37	Do 77 ...	Tank ...	Do 73 and 74 ...	Do 79
				Venkata *bin* Mutha	68	1	3	5 0	0	1	3	Do 66 ...	Survey No. 71 ..	Do 69 ...	Do 67
				Vyasa Rao	69	0	26	3 8	0	0	26	Tank ...	Do 70 ...	Tank ...	Do 68
Kolar	Goribidnur	Hosur	Kurodi	Doddamallappa	71	1	31	9 0	0	1	31	Survey No. 68 ...	Do 72 ...	Survey No. 70 ...	Do 67
				Narasimhiah	72	0	17	2 0	0	0	17	Do 71 ..	Do 73 ...	Tank ...	Do 74
				Do	75	0	39	5 0	0	0	39	Do 67 ...	Do 74 ...	Survey No. 71 ...	Do 77
				Hutcha	71	0	4	0 8	0	0	4	Do 68 ...	Do 72 ...	Do 70 ...	Do Nos. 67 and 75
				Venkata	74	0	22	2 0	0	0	22	Do 75 ...	Do 73 ...	Do 72 ...	Do No. 76
				V. Nanja	77	0	24	2 8	0	0	24	Do 67 ...	Do 76 ...	Do 75 ...	Do 78
				Total ...	...	10	29	49 8	0	9	21				

No. R. 14804—*L. R.* 628-05-5, *dated* 16*th May* 1906.

Under Section 6 of the Land Acquisition Regulation No. 7 of 1904, it is hereby declared that the lands described hereunder are required for a public purpose, *viz.*, for inclusion in the Sunka Tannur tank in the French Rocks Sub-Taluk; and under Sections 7 and 8 (*c*) of the said Regulation, the Assistant Commissioner in charge of French-Rocks Division office is authorized to take orders for the acquisition of the said lands:—

District	Taluk	Hobli	Village	Name of Khatedars	Description of land: Survey No.	Description of land: Dry, wet or garden	Total extent (A. g.)	Assessment	Extent to be acquired (A. g.)	Boundaries: East	Boundaries: West	Boundaries: North	Boundaries: South	Remarks
Mysore	French Rocks Sub-Taluk	Melkote	Sunka Tannur	Chenna, Chikkanarasa and 5 others ...	283	Dry ...	5 8	4 0 0	1 0	Sunka Tannur tank and Survey No. 282.	Survey No. 284 ...	S. No. 273 ...	Bed of Sunka Tannur tank.	sites to be given to them in exchange for theirs.
				Betty, Rama	281	Do ...	4 24	3 8 0	0 20	S. No. 283 ...	S. No. 285 ...	S. No. 273 ...	Do	
				Government waste land ...	285	Waste ...	1 22	...	0 12	S. No. 281	S. Nos. 286 and 287 ..	S. No. 272 ...	Do	
				Betty Rama	282	Dry ...	1 33	1 4 0	0 32	S. No. 279 ...	S. No. 283 ...	S. No. 278 ...	Do and S. No. 281.	
				Kala, Chikka, Dolla	288	Do ...	6 16	5 0 0	1 0	Bed of tank ...	S. No. 289 ...	S. Nos. 286 and 287 .	S. Nos. 289 and 290.	
				Kempa, Devari, Futheri and Kalegowda..	289	Do ...	3 30	3 8 0	1 20	Do ...	S. No. 290 ...	S. No. 288 ...	Bed of tank.	
				Kalegowda *alias* Kempaygowda ...	290	Do ...	5 10	4 8 0	0 28	S. No. 289 and tank ...	S. Nos. 291, 265 and 293.	S. Nos. 269 and 288 ..	Do	
				Thimma *alias* Thimarayee ...	293	Do ...	5 8	4 0 0	1 20	S. No. 290 ...	Kharab Halla ...	S. Nos. 291 and 292 ...	Do and S. No. 294.	
				Bora *alias* Chikkacharee ...	294	Do ...	0 37	0 12 0	0 37	Bed of tank ...	Do ...	S. No. 293 ...	Bed of tank.	
				Kulla	257	Do ...	2 31	2 8 0	1 0	Kharab Halla ..	S. Nos. 258 and 259 ...	S. No. 261 ...	S. Nos. 255, 256 and 295.	
				Kala Thimma, husband of Channee ...	256	Garden ..	0 15	1 0 0	0 15	S. No. 257 ...	S. Nos. 255 and 257 ...	S. No. 257 ...	S. No. 255.	
				Kempegowda	255	Do ...	0 37	3 0 0	0 32	S Nos. 295, 256 and 257.	S. No. 253 ..	S. Nos. 257 and 256 ...	S. Nos. 254 and 300.	
				Rama, Chikka, Narasimha	253	Do ...	0 19	1 8 0	0 19	S. No. 255 ...	S. No. 253 ...	S. No. 255 ...	S. No. 301.	
				Kala, Deva and others	253	Do ...	0 7	0 8 0	0 16	S. Nos. 254 and 255 ...	Koduguhalli out-post...	S. No. 258 .	S. Nos. 252 and 247.	
						Dry ...	8 37	8 0 0						
				Kulla	259	Do ...	6 35	6 0 0	0 12	S. Nos. 261 and 257 ...	S. No. 260 ..	S. No. 261 ...	S. No. 258.	
				Thimmagowda	251	Garden ...	0 23	2 0 0	0 12	S. No. 301 ...	S. No. 252 ...	S. No. 252 ...	S. Nos. 250 and 304.	
				Devegowda	303	Do ...	0 9	0 8 0	0 6	S. No. 306 ...	S. No. 304 ...	S. No. 301 ...	S. No. 306.	
				Do	248	Do ...	0 13	1 0 0	0 4	S. No. 249 ...	S. No. 247 ...	S. No. 247 ...	S. No. 246.	

Mysore	French Rocks Sub-Taluk	Melkote	Sunka Tannur	Thimma and others	247	Dry ...	3 25	3 0 0	0 4	S. Nos. 248, 246 and 250.	Kodagihalli out-post ...	S. Nos. 253 and 252 ...	S. No. 246, 248 and 249.	These are willing to remove their sheds and build on other
				Devagowda, Kala	249	Do ...	0 10	0 12 0	0 10	S. No. 250 ...	S. Nos. 248 and 246 ...	S. No. 247 ...	S. No. 246.	
				Gowdagowda	250	Do ...	0 32	2 4 0	0 32	S. Nos. 304 and 305 ...	S. Nos. 247 and 249 ...	S. No. 251 ...	S. Nos. 246 and 305.	
				Do	246	Do ...	7 34	7 0 0	1 20	S. No. 309 ...	Kodagihalli out-post ...	S. Nos. 247, 248 and 249.	S. Nos. 313. 245.	
				Do Thimmarayee and Kempa ...	305	Garden ..	0 21	1 8 0	0 21	S. Nos 306 and 308 ...	S. Nos. 350 and 246 ..	S. No. 304 ..	S. No. 309.	
				Gowdagowda	309	Dry ...	3 1	3 8 0	3 1	S. Nos. 308, 301 and bed of tank.	S. No. 246 ...	S. Nos. 307, 308 and 305.	S. Nos. 310 and 313.	
				Seshamma	313	Do ...	2 8	2 8 0	1 0	S. Nos. 311 and 310 ...	S. No. 245 ...	S. Nos. 246 and 309 ..	S. Nos. 318, 314 and 315.	
				Gowdagwoda	311	Do ...	0 10	0 4 0	0 8	S. No. 310 ..	S. No. 313 ...	S. No. 310 ...	S. No. 312.	
				Seshamma	310	Do ...	1 15	1 8 0	1 0	Bed of tank ...	S. Nos. 309 and 313 ...	S. No. 309 ...	S. No. 311 and tank bed.	
				Betty Rama	307	Do ...	1 12	1 8 0	1 12	Do ...	S. No. 308 ...	S. No. 306 ...	S. No. 309 and tank bed.	
				Venkatasetty	306	Garden ...	0 4	0 4 0	0 4	Do ...	S. No. 305 ...	S. Nos. 298, 301 and 302.	S. Nos. 308 and 307.	
						Dry ...	1 17	1 8 0						
				Sarcar (Government)	331	Kharab ...	0 8	...	0 4	S. No. 332 ...	S. No. 330 ...	Tank ...	S. No. 330.	
				Betty Rama, Kulla	332	Dry ..	4 2	3 8 0	1 30	S. Nos. 334 and 333 ...	S. Nos. 330 and 331 ...	Do ...	Village and village site.	
				Bommanagowda	333	Do ...	0 23	0 8 0	0 12	Village ...	S. No. 332 ...	S. No. 334 ...	Village.	
				Masty Kulla, Veera and others ...	334	Do ...	1 39	1 12 0	1 0	Tank ..	S. No. 332 ...	Tank ...	S. No. 333 and village.	
				Kallagowda	295	Do ...	0 21	0 8 0	0 21	Halla ...	S. No. 255 ...	S. No. 257 ...	S. Nos. 269 and 299.	
				Devegowda	296	Garden ...	0 20	1 0 0	0 20	Tank of Halla ..	S. No. 297 ...	S. No. 295 ...	S. No. 297.	
				Kulla	297	Do ...	0 39	2 0 0	0 39	Tank ...	S. Nos. 298 and 299 ...	S. No. 296 ...	Tank.	
				Thimmegowda	298	Do ...	0 19	1 0 0	0 19	S. No. 297 ...	S. No. 301 ...	S. Nos. 299 and 300 ...	Do and S. No. 306.	
				Karya Lakshma	299	Do ...	0 15	0 12 0	0 15	S. Nos. 296 and 297 ...	S. No. 300 ...	S. No. 295 ...	S. No. 298.	
				Kalegowda	300	Do ...	0 18	1 4 0	0 18	S. No. 299 ...	S. No. 302 ...	S. No. 255 ..	S. No. 301.	
				Kempa Davare and Patture ...	301	Do ...	0 13	1 0 0	0 13	S. No. 298 ...	S. No. 302 ..	S. No. 300 ...	S. No. 306.	
				Linga, Kulla and others	302	Do ...	0 26	2 4 0	0 26	S. Nos. 300 and 301 ...	S. Nos. 251 and 252 ...	S. No. 254 ...	S. No. 303.	
				Kalla and others	304	Do ...	0 11	0 12 0	0 11	S. No. 303 ..	S. No. 250 ...	S. No. 251 ...	S. No. 305.	
				Betty Ramma	308	Do ...	0 22	1 4 0	0 22	S. No. 307 ...	S. Nos. 309 and 305 ...	S. No. 306 ...	S. No. 309.	
				Kallegowda and Earaygowda and others.		Building sites				Bed of tank ...	Village ...	S. No. 334 ...	S. No. 1115.	

No. R. 14387—*L. R.* 652-05-3, *dated 9th May* 1906.

Under Section 6 of the Land Acquisition Regulation, No. VII of 1894, it is hereby declared that the land described hereunder is required for a public purpose, *viz.*, for the construction of a Forest lodge; and under Sections 7 and 3 (*c*) of the said Regulation, the Assistant Commissioner in charge of Honnali group of taluks is authorized to take order for the acquisition of the said land:—

District	Taluk	Village	Name of khatedar	Survey No.	Dry, wet or garden	Total extent	Assessment	Extent now required	Boundaries			
									East	West	North	South
						A. g.	Rs. a. p.	A. g.				
Shimoga	Shikarpur	Kallamane	Siddanna, son of Sivanna	173	Dry ...	2 24	4 8 0	2 24	Survey No. 1 and the village site	Survey No. 172	Survey Nos. 3 & 4	Survey No. 174 and the village site
					Wet ...	1 33						
					Total extent.	4 17						

No. R. 14541—*L. R.* 666-05-3, *dated 11th May* 1906.

Under Section 6 of the Land Acquisition Regulation, No. VII of 1894, it is hereby declared that the land described hereunder is required for a public purpose, *viz.*, for improving the Honnali-Basavapatna road; and under Sections 7 and 3 (*c*) of the said Regulation, the Assistant Commissioner in charge of Honnali group of taluks is authorized to take order for the acquisition of the said land:—

District—Shimoga.
Taluk—Honnali.
Village—Benakanahalli.
Name of khatedar—Savantrava, wife of Bhima.
Survey No.—74.
Dry, wet or garden—Dry.
Total extent—8 acres and 38 guntas.
Assessment—Rs. 3-8-0.
Extent required—20 guntas.
Boundaries—
East—Survey No. 73.
West—Survey No. 75.
North—Survey No. 43.
South—Survey No. 77.

No. R. 14577—*L. R.* 661-05-3, *dated 11th May* 1906.

Under Section 6 of the Land Acquisition Regulation, No. VII of 1894, it is hereby declared that the lands described hereunder are required for a public purpose, *viz.*, for opening a relieving weir channel to the Gondi channel, Kadur Taluk; and under Sections 7 and 3 (*c*) of the said Regulation, the Assistant Commissioner in charge of the Tarikere group of taluks is authorized to take order for the acquisition of the said lands:—

District	Taluk	Hobli	Village	Name of khatedar	Survey No.	Dry, wet or garden	Total extent	Assessment	Extent required	Boundaries			
										East	West	North	South
							A. g.	Rs. a. p.	A. g.				
Kadur	Kadur	Malleswara		Gullappa *bin* Jakanachari.	161	Wet ..	3 15	9 0 0	0 20	S. No. 162	S. No. 161	Channel kodi and S. No. 161	S. No. 161
				Shambhatta *bin* Krishna Sastri.	162	Do ...	2 27	7 0 0	0 10	Do	S. No. 162	S. No. 162	S. No. 162

No. R. 14788—*L. R.* 667-05-3, *dated 16th May* 1906.

Under Section 6 of the Land Acquisition Regulation, No. VII of 1894, it is hereby declared that the land described hereunder is required for a public purpose, *viz.*, for building houses; and under Sections 7 and 3 (*c*) of the said Regulation, the Assistant Commissioner in charge of the Hunsur group of taluks is authorized to take order for the acquisition of the said land:—

District—Mysore.
Taluk—Heggaddevankote.
Hobli—Kasaba.
Village—Yelehundi.
Name of khatedar—Subba Rao.
Survey No.—$\frac{2}{3}$.
Dry, wet or garden—Dry.
Total extent—4 acres and 1 gunta.
Assessment—Rs. 2 and annas 4.
Extent now required—4 acres and 1 gunta.
Boundaries—
East—Road.
West—Survey Nos. 3 and 8.
North—Do Nos. 10 and 11.
South—Do No. 1 and village.

No. R. 14884—*Ft.* 192-05-3, *dated* 19*th May* 1906.

The Government of His Highness the Maharaja of Mysore are pleased to declare, under the provisions of Section 4 of the Mysore Forest Regulation (XI of 1900), that it is proposed to constitute the area, the boundaries of which are described in the schedule below, a State Forest, under the provisions of the said Regulation :—

SCHEDULE.

District	Taluk, hobli and village	Approximate area	Name of block	Situation and boundaries.
Bangalore.	Anekal Taluk, Jigani hobli.	1.99 square miles.	Ragihalli State Forest, extension (North Block).	Situation :— To the immediate north of the Ragihalli State Forest. Boundaries :— *North.*—Starting from the tri-junction bandhs of the Ragihalli State Forest and Survey Nos. 64 and 120 of Bhutanahalli, the line runs south-east to the southernmost corner of Survey No. 64 where it meets the Bannirgatta kaval ; then south and then east along the Bannirgatta kaval boundary till it meets Survey No. 16 of Bhairappanahalli; then east through that Survey number for a distance of five furlongs to a point in the east side of that Survey number about one mile and 135 yards to the north from the southernmost corner of that Survey number; then north-east through Survey No. 130 of Bannirgatta to a distance of about two furlongs ; then south-east to a distance of about two and three-fourths furlongs through the same Survey number to the point where it meets the demarcation line of the Ragihalli State Forest, about one furlong to the west of the Vajarahalli village limit. *East.*—The demarcation line of the Ragihalli State Forest. *South.*— Do do do *West.*— Do do do

2. The Government of His Highness the Maharaja of Mysore are further pleased, under clause (c) of the said section, to appoint Mr. A. Ananda Rao, Extra Assistant Commissioner, to be the Forest Settlement Officer, who shall inquire into and determine the existence, nature and extent of any rights claimed by, or alleged to exist in favor of, any person in or over land comprised within such limits, or to any forest produce of such land, and to deal with the same as provided in Chapter II of the said Regulation, and the District Forest Officer of the Bangalore District, for the time being, to attend on behalf of Government to assist the Forest Settlement Officer in the inquiry.

3. The Government of His Highness the Maharaja of Mysore are further pleased, under the authority vested in them by Section 15 of the said Regulation, to appoint the Deputy Commissioner of the Bangalore District, for the time being, to be the Officer of the Revenue Department who shall hear appeals from the orders of the Forest Settlement Officer under Sections 10, 11, 12, 13 or 14 of the Regulation.

No. R. 14880—*Ft.* 192-05-2, *dated* 18*th May* 1906.

The Government of His Highness the Maharaja of Mysore are pleased to declare, under the provisions of Section 4 of the Mysore Forest Regulation (XI of 1900), that it is proposed to constitute the area, the boundaries of which are described in the schedule below, a State Forest, under the provisions of the said Regulation :—

SCHEDULE.

District	Taluk, hobli and village	Approximate area	Name of block	Situation and boundaries
Bangalore.	Anekal Taluk, Jigani hobli, Ragihalli.	2·20 square miles.	Ragihalli State Forest extension (South Block).	Situation :— To the south-east of the Ragihalli State Forest. Boundaries :— *North.*—The demarcation line of the Ragihalli State Forest. *East.*—The limits of Jodi Mahantlingapura village. *South.*—The limits of Jodi Shivanahalli village. *West.*—The demarcation line of the Ragihalli State Forest.

NOTE.—The following lands which are included within the boundaries described above are not proposed to be reserved.

Statement showing the Survey numbers enclosed in the boundary of the proposed Ragihalli State Forest, south extension, but not proposed to be reserved:—

Assessed occupied No.	Assessed waste			Kharab		Gomal	
	No.	Area A. g.	Assessment	No.	Area A. g.	No.	Area A. g.
			Rs. a. p.				
1	26	2 15	3 0 0	3	0 34	45	141 2
2	44	4 3	5 8 0	47	6 9		
4	55	2 17	6 0 0	58	4 21		
5	56	1 20	3 8 0	70	0 31		
6	65	4 4	5 8 0	75	1 15		
7	66	0 33	1 0 0	94	0 22		
8	69	7 19	11 0 0	98	0 15		
9	72	4 20	6 8 0				
10	73	6 1	8 8 0				
11	87	6 19	9 8 0				
12	92	4 16	6 0 0				
27	99—3	2 25	3 12 0				
28							
29							
30							
31							
32							
33							
34							
35							
36							
37							
38							
39							
40							
41							
42							
43							
46							
48							
49							
50							
51							
52							
53							
54							
57							
59							
60							
61							
62							
63							
64							
67							
68							
74							
76							
77							
78							
79							
80							
81							
82							
83							
84							
85							
86							
88							
89							
90							
91							
93							
95							
96							
97							
100							
101							
102							
68	12	46 32	69 12 0	7	14 27	1	141 2

2. The Government of His Highness the Maharaja of Mysore are further pleased, under clause (*c*) of the said section, to appoint Mr. A. Ananda Rao, Extra Assistant Commissioner, to be the Forest Settlement Officer, who shall inquire into and determine the existence, nature and extent of any rights claimed by, or alleged to exist in favor of, any person in or over land comprised within such limits, or to any forest produce of such land, and to deal with the same as provided in Chapter II of the said Regulation, and the District Forest Officer of the Bangalore District, for the time being, to attend on behalf of Government to assist the Forest Settlement Officer in the inquiry.

3. The Government of His Highness the Maharaja of Mysore are further pleased, under the authority vested in them by Section 15 of the said Regulation, to appoint the Deputy Commissioner of the Bangalore District, for the time being, to be the Officer of the Revenue Department who shall hear appeals from the orders of the Forest Settlement Officer under Sections 10, 11, 12, 13 or 14 of the Regulation.

No. R. 14908—*Ft.* 84-05-7, *dated* 19*th May* 1906.

The Government of His Highness the Maharaja of Mysore are pleased to declare, under the provisions of Section 17 of the Mysore Forest Regulation (XI of 1900), that from the 1st July 1906, the area, the boundaries of which are set forth in the schedule annexed to this Notification, shall be deemed to be a "State Forest," subject to the exercise of rights specified at foot thereof:—

SCHEDULE.

District	Taluk	Approximate area	Name of block	Boundaries
Mysore.	French Rocks Sub and Nagamangala Taluks.	1·97 square miles.	Mudibetta.	*North.*—Starting from the north-east corner of Survey No. 53 of Talekere, the line runs north-east along the boundary between Gujgonahalli and Talekere to the tri-junctions of the same and Jodi Alpahalli villages; thence south along the boundary between Jodi Alpahalli and Talekere to the junction village bandhs of Talekere Jodi Alpahalli, Jodi Inam Adavikatte and Garkihalli; thence south-east for a distance of about fifty-five chains and east for a distance of about thirty-one chains along the boundary between the last two villages, to forest boundary mark No. 1. *East.*—Thence south-west across Survey No. 231 of Garkihalli for a distance of about thirty-five chains to the north-west corner of Survey No. 230; thence south along the western side of that number, to its south-west corner; thence south-west across Survey No. 11 of Garudapura, for a distance of about fifty-one chains to forest boundary mark II, thence across Survey No. 152 of Kadalagere for a distance of about forty-one chains to the north-east corner of Survey No. 153. *South.*—Thence west, along the northern side of Survey No. 153 to its north-west corner. *West.*—Thence north-west across Survey No. 152 of Kadalagere for a distance of about ten chains to the south-east corner of Survey No. 27 of Kanaganahalli, (tri-junction of Kanaganahalli, Kadalagere and Melkote); thence along the boundary between Melkote and Kanaganahalli for a distance of about five chains; thence north-west across Survey No. 27 of the latter village for a distance of about forty chains to the south-east corner of Survey No. 93 of Talekere; thence north-east across Survey No. 48 for a distance of about seven chains to the south-east corner of Survey No. 51; thence north along the eastern sides of Survey Nos. 51 and 50, to the easternmost bandhs of the latter number; thence north in a straight line across Survey No. 48 for a distance of about thirty-five chains to the south-east corner of Survey No. 49; thence along the southern side of that number, to its south-west corner; thence north-west across Survey No. 48, for a distance of about fifty-five chains to the starting point.

REMARKS.

A. The undermentioned rights of way are allowed within the block for men and cattle, all the year round:—

i. *Foot-path,* from Talekere to Alpahalli, three feet wide. It enters the State Forest in its western boundary in Survey No. 48 of Talekere, about twenty-seven chains north-west from the south-west corner of Survey No. 49 and running north-east across Survey No. 48 for a distance of about thirty-nine chains, quits the forest in its northern boundary, about eighteen chains south from the tri-junction bandhs of Gujgonahalli, Talekere and Jodi Alpahalli villages.

ii. *Footh path,* from path No. i, *supra,* to Garkihalli, three feet wide. This branches from path No. i, about fifteen chains north-east from the point of its entrance and running south-east across Survey No. 48 of Talekere for a distance of about thirty-eight chains quits the forest in its northern boundary about fifteen chains north from the tri-junction bandhs of Garkihalli, Jodi Alpahalli and Jodi Inam Adavikatte villages.

iii. Right to water in Karalakatte in Survey No. 11 of Garudapura is admitted all the year round, with a camping ground of five thousand square yards, or one acre, all round the katte for sheltering cattle.

CIVIL APPOINTMENTS.

Heads of Departments and all other officers concerned are informed that Notifications in the Gazette are in future to be accepted as disposing of all references regarding leave, transfers, appointments, powers and other personal questions affecting Gazetted officers, as to which orders are gazetted by the Government in this Part of the Gazette, and that any subsidiary orders as to relief of their subordinates and the like, which such notifications necessitate, must be issued by them on receipt of the Gazette, as no other orders will be issued by Government.

No. J. 3257—*Police* 154-05-4, *dated* 19*th May* 1906.

Under Article 188 of the Mysore Service Regulations, Mr. Nagar Subba Rao, Head-Quarter Office Assistant to the Inspector-General of Police, under transfer to the Revenue Department, is granted privilege leave of absence for three months, with effect from the date from which he may avail himself of the same.

2. The privilege leave for one week granted to him in Notification No. 2865—Police 154-2, dated the 16th April 1906, is cancelled.

No. 11951—*Med.* (194-05)-5, *dated* 19*th*—21*st May* 1906.

Under Article 188 of the Mysore Service Regulations, Mr. T. S. Siddappa, Sub-Assistant Surgeon in charge of the Local Fund Dispensary at Mudgere, is granted privilege leave of absence for fifteen days, with effect from the 28th April 1906.

No. Fl. 7936—*Gen. Fin.* 309-05-5, *dated* 17*th May* 1906.

The fifteen days' privilege leave granted to Mr. B. Gopaliengar, Officer in charge of the State Huzur Treasury, with effect from the 3rd May 1906, is extended by fourteen days, *i. e.*, to the end of May 1906.

No. R. 14869—*L. R.* 682-05-2, *dated* 18*th May* 1906.

Under Article 188 of the Mysore Service Regulations, Mr. K. Mylar. Rao, Acting Extra Assistant Commissioner in charge of the Tarikere group of taluks, is granted privilege leave of absence for fifteen days, with effect from the 21st May 1906, or any subsequent date from which he may avail himself of it.

2. During the above period or until further orders, Mr. V. Krishna Rao, Acting Extra Assistant Commissioner in charge of the District Treasury, will be in charge of the Tarikere group of taluks in addition to his own duties.

No. R. 14921—*L. R.* 242-05-4, *dated* 21*st May* 1906.

Under Article 188 of the Mysore Service Regulations, Mr. C. V. Narayana Rao, Amildar of the Tiptur Taluk, is granted privilege leave of absence for nine days, with effect from the 23rd May 1906.

2. During the absence of the Amildar on leave or until further orders, the Taluk Sheristadar, P. Sanjiva Rao, will be in charge of the taluk and exercise 3rd Class Magistrate's powers.

No. R. 14923—*L. R.* 460-05-12, *dated* 21*st May* 1906.

Mr. T. Ramachandra Rao, Amildar of the Chitaldrug Taluk, who was granted three months' privilege leave in Notification Nos. R. 11459—L. R. 460-05-5 and R. 13265—L. R. 460-05-8, dated the 3rd March and 11th April 1906, respectively, having availed himself of it from the afternoon of the 15th February 1906 and returned to duty on the forenoon of the 8th May 1906, the unexpired portion thereof is hereby cancelled.

The Petition Box kept at the Office of the General and Revenue Secretariat, Bangalore, will be cleared at 12 noon every day by the Secretary to Government, General and Revenue Department, and in his absence from Bangalore, by the Deputy Secretary.

By Order,

B. K. VENKATA VARADA IYENGAR,

Secy. to Govt., Gen. & Rev. Dept.

PUBLIC WORKS.

No. 488—3368, *dated* 19*th May* 1906.

Mr. T Arunachala Iyer, A.M., I.E.E., Divisional Superintendent, Bangalore Power and Lighting Scheme, is granted privilege leave of absence for seven weeks, with effect from the 11th proximo or date of availing himself of the same.

No. 491—3391, *dated* 21*st May* 1906.

The Government of His Highness the Maharaja of Mysore are pleased to confer on Mr. H. L. Wheeler, Supervisor, 1st class, Public Works Department, the title of Honorary Assistant Engineer, in appreciation of his long and faithful service rendered to the State.

By Order,
W. McHUTCHIN,
Secy. to Govt., P. W. D.

MUZRAI.

No. 5266, *dated* 17*th May* 1906.

Mr. L. Anantasami Rao, B.A., Secretary to the Government of His Highness the Maharaja of Mysore in the Muzrai Department, having returned to duty on the forenoon of the 17th instant, the unexpired portion of a month's privilege leave granted to him in Notification No. 4809, dated 19th April 1906, *viz.*, four days, is hereby cancelled.

By Order,

L. ANANTASAMI RAO,
Secy., Muzrai Dept.

516

The Mysore Gazette.

Vol. 41.] PUBLISHED BY AUTHORITY. [No. 21.

BANGALORE, THURSDAY, MAY 24, 1906.

PART II.

Notifications by Govt. of India, Resident, Chief Court, &c.

FOREST DEPARTMENT.

It is hereby notified for general information that the following quantities more or less of Minor Forest Produce, will be sold by public auction in several places of the Mysore District, on the dates specified against each :—

No.	Place	Date of sale	Designation of the officer conducting the sale	Minor Forest products								
				1st class Lac		Gall-nuts		Honey		Wax		Tamarind
				Mds	lb.	Mds.	lb.	Mds.	lb.	Mds.	lb.	Mds.
1	Seringapatam Koti ...	25th May 1906	District Forest Officer, Mysore	110	7	1,045	21	6	3	0	22	...
2	Gundlupet ...	26th May 1906	Forest Range Officer ...	...		350	0	..		...		30
3	Chamrajnagar ..	28th May 1906	Do ...	...		500	0	...		...		...

TERMS OF SALE.—*Vidé* Inspector-General's Notification dated 11th June 1887, published at pages 287—288 of the *Mysore Gazette*, dated 18th June 1887.

Notice dated 3rd May 1906.

The attention of the public is invited to the notification of this Department issued under the date 3rd May 1906, regarding the sale of minor forest products in several places of the Mysore District, published at page 750 of the *Mysore Gazette* dated 10th May 1906.

Notification dated 29th April 1906.

It is hereby notified for general information that the following quantities of timber will be sold by public auction in the depots of the Mysore District on the dates specified against each depot, by the District Forest Officer of the Mysore District :—

No.	Name of depot	Date of sale	Description	Cubical contents		Remarks
				No.	C. feet	
1	Mysore wood-yard ...	19th May 1906 ...	Matti logs	100	2,500	More or less
			Teak logs	350	12,000	
			Do pieces	100	1,500	
			Honne logs	50	1,000	
2	Nanjangud depot ...	21st May 1906 ...	Teak logs	100	3,000	
			Do pieces	100	1,500	
			Honne logs	50	1,500	

N. B.—Terms of sale.—Notification No. R. 15229-*R.F.* 155-92, dated the 15th March 1895, published in the *Mysore Gazette* No. 15, dated the 25th April 1895.

M. G. RAMA RAO,
Dt. Forest Officer, Mysore.

Abstract Notice, dated 14th May 1906.

Attention of the public is invited to the notification published on page 778 of Part II of the *Mysore Gazette* dated the 17th May 1906, regarding the sales of minor forest products in the depots of the Hassan District.

Y. SITARAMAIYA,
District Forest Officer, Hassan.

COORG FOREST DEPARTMENT.

NOTICE.

Mercara, 28th April 1906.

The right of collecting the undermentioned Minor Forest Produce in the Reserved Forests, Devarakadus and Urudves in the taluks of Coorg during the Forest year 1906-07 (extending from 1st July 1906 to 30th June 1907), will be sold by public auction at the following places on the date specified :—

Name of taluk	Place of sale	Date of sale	By whom sold
Mercara ...	Mercara	15th June 1906	Deputy Ranger, Mercara.
Padinalknad ...	Napoklu	16th June 1906	Range officer, Kutumpole.
Nanjarajpatna and Yelusavirashime	Somvarpet	18th June 1906	Range officer, Cauvery.
Yedenalknad ...	Virajendrapet	20th June 1906	Range officer, Kutumpole.
Kiggatnad ...	Ponnampet	25th June 1906	Sub-divisional officer, South Coorg Forests.

Tamarind.	Antuvaladakai.	Gum and saffron.
Shigekai.	Pauple chekke.	Ramagotu and Ramapatre.
Alalekai.	Horns of deer.	Honge seed.
Honey, bees-wax.	Lacc and yellow dye.	Nux vomica seed.

Terms :—25 per cent of the value of the produce should be paid at the time of sale and the balance within thirty days as notified in Chief Commissioner's Notification No. 44, dated 8th November 1889, published in the *Coorg District Gazette*, dated 2nd December 1889.

For further particulars apply to the Deputy Conservator of Forests, Coorg, Mercara.

C. MCCARTHY,
Dy. Conservator of Forests, Coorg.

POLICE DEPARTMENT.

Notice dated Champion Reefs, 4th May 1906.

Notice is hereby given that a sum of Rs. 1-3-10, being the arrears of pay and travelling allowance due to certain ex-Police constables as detailed below, lies unclaimed and that, if the claimants do not appear and receive the amount from the undersigned within one month from this date, the same will be credited to Government :—

Name and Division	Amount			Remarks
	Rs.	a.	p.	
Ex P. C No. 176, Mannaji Rao of A Division	0	6	11	Arrears of pay for February 1906.
Do 200, Varadaraju do ...	0	6	11	Do do
Do 134, Abboy Naidu do ...	0	6	0	Arrears of travelling allowance for July 1905.
Total ...	1	3	10	

By Order,
R. J. M. MAYNE,
Deputy Supt. of Police, Kolar Gold Fields.

Dated 7th May 1906.

Descriptive roll of a woman named Sannamma, wife of Subbaiya *bin* Narnappa, who disappeared from her house at Honnemaradu, within the limits of Talaguppa Station of the Sagar Taluk :—

Name of Taluk—Sagar.
Name—Sannamma.
Caste—Havik Brahman.
Residence—Honnemaradu.
Height—Five feet, three inches.
Age—Twenty-six or twenty-seven years.
Complexion—Dark brown.
Descriptive marks—Round face, the two middle *incisors* of the upper jaw are fallen.
Any information about the person may be kindly communicated to the undersigned.

M. S. NARAYAN RAO,
for *Supt. of Police.*

MISCELLANEOUS.

BANGALORE DISTRICT.

Notification dated 19th April 1906.

It is hereby notified for public information that the undermentioned Jodi village, which has been duly attached in satisfaction of the arrears of revenue due to Government (as shown in the subjoined statement) by the said Jodidars, will be sold by public auction at the place and on the date mentioned in the annexed statement. The sale will commence at 11 A.M. on the date specified, and the village will be knocked down to the highest bidder without reserve.

2. The purchaser will be required to deposit twenty-five per cent of the purchase money at the time of sale, and where the remainder of the purchase money may not be paid within fifteen days from the day of sale, the money so deposited shall be liable to forfeiture.

3. When such deposit shall not be made nor the remaining purchase money paid up, the village shall be re-sold at the expense and risk of the first purchaser.

4. Persons bidding at the sale may be required to state whether they bid on their own account or as agents, and in the latter case to deposit a written authority signed by their principals, otherwise their bids may be rejected.

5. The sale shall be stayed, if the defaulters or any other person acting on their behalf or claiming an interest in the land, tender the full amount of the arrears of revenue with the interest and other charges, before the property is knocked down, or give satisfactory proof that the amount of arrears, etc., has been paid up or furnish security under Section 170 of the Mysore Land Revenue Code.

6. Purchaser having completed the payment of the purchase money will, as soon as the sale has been confirmed, be placed in immediate possession, and the village will be registered in the name of the purchaser, and a certificate of sale signed and sealed by the Deputy Commissioner will be granted to him. It is to be distinctly understood that the Government are not responsible for errors of description or in estimated extent.

7. Provided, parties deeming themselves aggrieved by the sale shall be at liberty to appeal to the Government within ninety days from the day of sale, and the purchase shall be conditional on the final order in such appeal.

SCHEDULE.

District	Taluk	Hobli	Village	Names of Jodidars	Estimated extent			Estimated gross rental or beriz			Arrears of Government revenue for which village is to be sold			Date of sale, etc.	Place of sale.
						A.	g.	Rs.	a.	p.	Rs.	a.	p.		
Bangalore	Nelamangala	Nijagal	Jodi Narayanapura	Suryanarayana Sastry, etc.	Dry ...	287	14	209	10	6	Arrears of jodi amount ...	9	9	25th June 1906.	Nelamangala Taluk Cutcherry.
					Wet ...	33	5	108	14	2	Notice fee ...	8	0		
					Garden ...	1	32	6	4	5	Attachment fee ...	8	0		
					Unculturable	24	26	3	0	0	Sale proclamation fee ...	8	0		
					Total ...	346	37	327	13	1	Total ...	1	9		
												122			

NOTE.—The sale is free from all tenures, encumbrances and rights created by the Jodidars, or any of their predecessors in title or in any wise subsisting against them.

Notification dated 17th May 1906.

It is hereby notified for public information that the undermentioned Kayamgutta village, which has been duly attached in satisfaction of the arrears of revenue due to Government (as shown in the subjoined statement) by the said Kayamguttadars, will be sold by public auction at the place and on the date mentioned in the annexed statement. The sale will commence at 11 A.M. the Anekal Taluk Office, and the village will be knocked down to the highest bidder without reserve.

2. Provided that when a village is divided into separate recognized vrittis, the Deputy Commissioner may, at his option, instead of selling the village as a whole, sell each vritti separately.

3. The purchaser will be required to deposit twenty-five per cent of the purchase money at the time of sale, and where the remainder of the purchase money may not be paid within fifteen days from the day of sale, the money so deposited shall be liable to forfeiture.

4. When such deposit shall not be made nor the remaining purchase money paid up, the lands shall be re-sold at the expense and risk of the first purchaser.

5. Persons bidding at the sale may be required to state whether they bid on their own account or as agents, and in the latter case to deposit a written authority signed by their principals, otherwise their bids may be rejected.

6. The sale shall be stayed, if the defaulters or any other person acting on their behalf or claiming an interest in the land, tender the full amount of the arrears of revenue with the interest and other charges, before the property is knocked down or give satisfactory proof that

the amount of arrears has been paid up or furnish security under Section 170 of the Mysore Land Revenue Code.

7. Purchaser having completed the payment of purchase money will, as soon as the sale has been confirmed, be placed in immediate possession; and the village will be registered in the name of the purchaser, and a certificate of sale signed and sealed by the Deputy Commissioner will be granted to him. It is to be distinctly understood that the Government are not responsible for errors of description and in estimated extent.

8. Provided paties deeming themselves aggrieved by the sale shall be at liberty to appeal to the Government within ninety days from the date of sale and the purchase shall be conditional on the final order in such appeal.

SCHEDULE

District	Taluk	Hobli	Village	Name of Kayamguttadar	Estimated extent		Estimated gross rental or beriz	Quit-rent payable annually to Government	Arrears of Government revenue for which village is to be sold	Date of sale, etc.
						A. g.	Rs. a. p.	Rs. a. p.	Rs. a p.	
Bangalore	Anekal	Jigani	Kayamgutta Lakshmipura	Venkatesiengar	Peramboke	142 37	4 0 0	Gutta		26th June 1906. At the village.
					Dry ...	177 14	193 12 0	233 4 0	251 6 0	
					Wet ...	39 39	183 8 0	Cess	Pro. fee 1 0 0	
					Garden ...	22 38	85 0 0	18 2 0		
					Total ...	383 8	471 4 0	251 6 0	252 6 0	

Boundaries.

East—Hullukasawanahalli, Varedahalli and Sakalawara villages.
West—Gollahalli and Kalkere.
North—Kalkere village.
South—Halesampigehalli and Mantappa villages.

Notification, dated 17th May 1906.

1. It is hereby notified for public information that the undermentioned Kayamgutta village, which has been duly attached in satisfaction of the arrears of revenue due to Government (as shown in the subjoined statement) by the said Kayamguttadar, will be sold by public auction at the place and on the date mentioned in the annexed statement. The sale will commence at 11 A.M. onthe 25th June 1906 in the Anekal Taluk office, and the village will be knocked down to the highest bidder without reserve.

2. Provided that when a village is divided into separate recognized vrittis, the Deputy Commissioner may, at his option, instead of selling the village as a whole, sell each vritti separately.

3. The purchaser will be required to deposit twenty-five per cent of the purchase money at the time of sale, and where the remainder of purchase money may not be paid within fifteen days from the day of sale, the money so deposited shall be liable to forfeiture.

4. When such deposit shall not be made nor the remaining purchase money paid up, the land shall be re-sold at the expense and risk of the first purchaser.

5. Persons bidding at the sale may be required to state whether they bid on their own account or as agents, and in the latter case to deposit a written authority signed by their principals, otherwise their bids may be rejected.

6. The sale shall be stayed, if the defaulters or any other person acting on their behalf or claiming an interest in the land, tender the full amount of the arrears of revenue with the interest and other charges, before the property is knocked down or give satisfactory proof that the amount of arrears has been paid up or furnish security under Section 170 of the Mysore Land Revenue Code.

7. Purchaser having completed the payment of purchase money will, as soon as the sale has been confirmed, be placed in immediate possession, and the village will be registered in the name of the purchaser, and a certificate of sale signed and sealed by the Deputy Commissioner will be granted to him. It is to be distinctly understood that the Government are not responsible for errors of description and in estimated extent.

8. Provided parties deeming themselves aggrieved by the sale shall be at liberty to appeal to the Government within ninety date from the date of sale and the purchase shall be conditional on the final order in such appeal.

SCHEDULE.

District	Taluk	Hobli	Village	Name of Kayamgutadar	Estimated extent			Estimated gross rental or beriz			Quit-rent payable annually to Government			Arrears of Government revenue for which village is to be sold			Date of sale, etc.
						A.	g.	Rs.	a.	p.	Rs.	a.	p.	Rs.	a.	p.	
Bangalore	Anekal	Jigani	Kayamgutta Halesampigehalli	Venkatesiengar							Gutta						25th June 1906. At the village.
					Peramboke...	9	27	0	4	0	96	0	0	102	10	0	
											Cess						
					Dry ...	62	35	82	8	0	6	10	0	Process fee			
					Wet ...	3	27	10	8	0				1	0	0	
					Garden ...	14	22	90	0	0							
					Total ...	90	31	183	4	0	102	10	0	103	10	0	

Boundaries.

East—Mantapa village.
West—Banneraghatta.
North—Kayamgutta Lakshmipuram village.
South—Mantapa village and Jangali Palya a hamlet of Mantapa.

D. DEVARAJ URS, *Dy. Comr.*

Notice dated 19th May 1906.

The public are hereby informed that on and after the 21st May 1906, the office of the Sub-Registrar of Bangalore will be held in Mr. Abdul Karim's bungalow opposite to the Reserve Police Lines, Fort, Bangalore.

D. DEVARAJ URS,
Dist. Registrar.

KOLAR DISTRICT.

Dated 7th May 1906.

It is hereby notified that the marginally noted Inam villages of the Kolar District will be sold by public auction, on the 21st June 1906, in the offices of the Amildars of the respective taluks, on account of arrears of revenue due to Government.

	Taluk	*Village*
(1)	Kolar	... Holur.
(2)	Chikballapur	... Chiganahalli.
(3)	Bowringpet	... Suriganahalli.
(4)	Do	... Kanambele.
(5)	Bowringpet	... Chambenahalli.
(6)	Do	... Ramanayakanahalli.
(7)	Do	... Ainorahosahalli.
(8)	Do	... Yeluvahalli.

NOTE.—For further particulars *vide* notifications published on pages 753-760, Part II of the *Mysore Gazette* dated 10th May 1906.

C. SHESHADRIENGAR,
for *Dy. Comr.*

IN THE COURT OF THE ASSISTANT COMMISSIONER AND 1st CLASS MAGISTRATE, KOLAR GOLD FIELDS.

Notice is hereby given that the sale proceeds (Rs. 2-12-0) of rice found in the Robertsonpet market on 1st February 1906 and produced by Robertsonpet Police with Property Form No. 39, dated 6th February 1906, and sold by order of Court, will be confiscated to Government, if not claimed within six months from this date.

Dated 9th May 1906.

Notice is hereby given that the marginally noted stamp paper produced by Robertsonpet Police, with Property Form No. 47, dated 3rd May 1906, will be confiscated to Government, if not claimed within six months from this date.

A stamp paper of eight annas value bearing No. 476, dated 11th April 1906, issued in the name of one Rayappan of Marikuppam Camp and found in the Robertsonpet Market by the Market Sergeant on 17th April 1904.

Dated 9th May 1906.

Notice is hereby given that certain monies, *viz.*, Rs. 985-3-6, seized by the Police at the Jolarpet Railway Station on 22nd January 1905 on the person of one Varadan and produced in C. C. 389 of 1904-05 on the file of this Court, will be confiscated to Government if not claimed within six months from this date.

R. B. PLUMER,
Asst. Comr. & 1st Class Magte.

KOLAR GOLD FIELDS SANITARY BOARD.

Notice dated 5th May 1906.

Notice is hereby given that the contract for the exclusive right of collecting fees for slaughtering (1) cattle, (2) sheep and goats in the slaughter enclosures at—

(1) Marikuppam (Stevens' Camp),

(2) Robertsonpet market, including daily slaughtering for the villages and camps, together with the right of collecting manure in the bandy stand, at the said market, from the 1st July 1906 to 30th June 1907,

will be put up to public auction and sold to the highest bidder, at the Court-house, Champion Reef, at 11 A.M. on the 21st June 1906.

The successful bidder will be required to deposit at once, in cash, or currency notes, (¼) one-fourth of the purchase money, or his bid will be cancelled, and the right to collect the manure and to collect fees for slaughtering animals re-auctioned, any loss to which the Sanitary Board may be thereby put to be borne by the said bidder. The balance of the purchase money, etc., to be paid thereafter, in eleven (11) regular monthly instalments, commencing from the 1st August 1906.

The contractor will be called upon to enter into the following agreements, with the undersigned :—

(1) To slaughter only in the licensed slaughter-houses or in such place as the Sanitary Board may from time to time direct.

(2) To keep the slaughter enclosures and bandy stand clean, and in sanitary condition, to the satisfaction of the Sanitary Inspector, or other officer of the Board.

(3) To remove all skins, carcasses, etc., immediately from the slaughter enclosures.

(4) To remove without delay all bones, horns and offal, from the slaughter enclosures, and bury them in such place as may be pointed out by the Sanitary Inspector.

(5) The contractor will also be called upon to take charge of the slaugher-enclosures and bandy stand, on the 30th June 1906, and on the expiry of the contract to hand over the said slaughter enclosures, and bandy stand, to the President of the Sanitary Board, or such officer as he may depute for the purpose, in good order and repair.

The undersigned reserves to himself the right to refuse any bid, without assigning any reason.

R. B. PLUMER,
Vice-President.

TUMKUR DISTRICT.

Notification dated 15th May 1906.

The President of the Tumkur Town Municipal Board invites tenders for the right to collect tolls on carts entering the limits of the Tumkur Town Municipality at the rate of two annas per cart laden with goods and one anna per empty cart, from 1st July 1906 to the 30th June 1907.

2. The tenders should be addressed to the President of the Municipal Board of Tumkur They will be opened by the President or the Vice-President in the District Office at 3-30 P.M. on the 12th proximo.

3. The President reserves to himself the right to refuse or accept a tender without assigning any reasons therefor.

4. Every tender must be accompanied by a sum of rupees twenty-five as earnest money. The earnest money in the case of rejected tenders will be returned.

5. One-eighth of the amount of the accepted tender should be paid at once; another eighth on the 1st of the month following and the remaining three-fourths in three equal monthly instalments beginning from 1st August 1906. The earnest money of Rs. 25 will be held in deposit and taken as part payment of the last instalment. In case of default to pay an eighth of the amount of the accepted tender, the tender will be void and the earnest money forfeit. In case of subsequent defaults the amounts paid until then will be forfeit and the President will be at liberty to call for fresh tenders for the remaining period or to sell the right by public auction or to otherwise deal with the collection of tolls.

6. A daily account should be maintained of the carts and collections and should be open to inspection at all times by the Taluk, District and Municipal authorities. At the end of every month the account should be submitted to the Vice-President for check and record.

7. All carts that are regularly assessed to the Municipality will receive a pass which will serve to distinguish them from other carts and to exempt them from the payment of tolls.

8. No toll shall be levied upon the carts conveying His Majesty's Mails or upon carts conveying the baggage of troops on the march or military stores or equipages or upon carts conveying any property belonging to Government or anything that is in the custody of the Police or of a Magistrate and is conveyed at their instance; as may be established in each case by the certificate of a Civil or Military Officer.

9. A second toll should not be levied on one and the same cart within twenty-four hours.

10. Any person who fraudulently or forcibly passes any toll-bar without paying the proper toll or who obstructs the toll-collector in the discharge of his duties, shall, in accordance with Chief Commissioner's Notification No. 274, dated 4th November 1876, be liable on conviction before a Magistrate, to simple or rigorous imprisonment for any term not exceeding three months or to a fine not exceeding Rs. 50.

11. In all cases of resistance to the toll-collectors the Police shall render help when required.

12. No toll shall be levied on carts that may be exempted by the President.

K. S. DORASAMI IYER,
President.

MYSORE DISTRICT.

Abstract Notification dated 2nd May 1906.

It is hereby notified that Sarvamanya Machavalalu, Akkihebbalu hobli, Krishnarajpete Taluk, will be sold by public auction in the office of the Amildar of the Taluk on the 28th June 1906 on account of arrears of revenue due to Government.

For further particulars see page 782 of Part II of *Mysore Gazette* No. 20 dated 17th May 1906.

C. KRISHNA RAO,
for *Dy. Comr.*

HASSAN DISTRICT.

Notification dated 16th May 1906.

Lease of the right of levying tolls at the Marnahalli Ghat, Manjarabad Taluk, for twelve months, from 1st July 1906 to 30th June 1907.

It is hereby notified that the right of collecting tolls at the toll-gate at the Marnahalli Ghat in the Manjarabad Taluk, Hassan District, for the twelve months commencing from 1st July 1906 and ending with 30th June 1907, will be sold by the Senior Assistant Commissioner, Saklespur, by public auction at the Taluk Cutcherry at Saklespur at noon on Saturday the 2nd June 1906.

2. The sale will not become absolute until confirmed by the Deputy Commissioner, Hassan District, who reserves to himself the final power of refusing or accepting the highest or any bid that may be offered without assigning any reason whatever.

3. The highest bidder shall at once deposit one-fourth of the amount bid for and shall be bound to pay the remaining amount in three equal monthly instalments, commencing from the 20th July 1906. He shall execute a bond within fifteen days of the confirmation of sale being notified to him and also produce a surety for the due fulfilment of the contract, subject to the terms herein specified. If the deposit be not made, or the bond be not executed, or the security not furnished, the contract will be re-sold at the risk of the defaulting contractor who shall be liable to make good any loss that may accrue from re-sale but shall not be entitled to participate in any profit at re-sale.

4. If any default is made in the payment of instalments, interest shall be charged upon arrears at one pie per rupee per month, up to the date of payment and the contract shall also be liable to be re-sold, at the discretion of the Deputy Commissioner or at the request of the

surety, all moneys due from the contractor and the deficit, if any, on re-sale being recovered from the defaulting contractor or his surety as a revenue demand.

5. In addition to the amount bid for, the contractor shall, subject to the conditions stated in paras 3 and 4, be bound to pay local cess at one anna per rupee of the contract amount paid into the Treasury.

6. The contractor, who purchases the right, is entitled to collect tolls only at the rates mentioned in the schedule, and he should conform to the rules published in the late Chief Commissioner's Notification No. 274, dated 4th November 1876. But Government servants travelling on duty, the animals and conveyances carrying them, their baggage, etc., are exempted from levy of toll.

7. The contractor is also bound to keep a true and correct account showing the daily collections, which shall be open to the inspection of the Taluk and District authorities.

8. He is also bound to keep true accounts of traffic passing through the ghat as specified in condition 7, for which purpose he shall maintain at his own cost, a resident mutsaddi.

9. The contractor will have the use of the Government toll-house and gate and he will be required to keep them in good repair, failing which, the cost of repair will be recovered from the contractor under the rules for the recovery of revenue arrears.

10. The contractor shall be required to furnish to the Manjarabad Taluk Cutcherry, not later than the 1st of each month, a true return showing the traffic on the ghat for the previous month.

11. The following is the schedule of rates :—

No.	Particulars	Amount
		Rs. a. p.
1	On every four-wheeled carriage	2 0 0
2	Do two-wheeled carriage	1 0 0
3	Do ekka	0 4 0
4	Do hackney on springs	0 2 0
5	Do cart and hackney, not on springs, drawn by eight bullocks, buffaloes, horses, ponies, asses or mules, if laden	1 8 0
6	Do do do if not laden	0 8 0
7	Do do six bullocks, if laden	0 12 0
8	Do do do if not laden	0 6 0
9	Do do four bullocks, etc., if laden	0 8 0
10	Do do do if not laden	0 4 0
11	Do do two bullocks, if laden	0 4 0
12	Do do do if not laden	0 2 0
13	Do buffalo or bullock, if laden	0 1 0
14	Do do do if not laden	0 0
15	Do elephant	1 8 0
16	Do camel, if laden	0 8 0
17	Do do if not laden	0 4 0
18	Do horse, if laden or ridden	0 1 6
19	Do do if unladen or led	0 0 9
20	Do tattu or mule, if laden or ridden	0 0 9
21	Do do unladen or led	0 0 6
22	Do ass, if laden or ridden	0 0 6
23	Do do unladen or led	0 0 1
24	Do sheep, goat or pig	0 0 1
25	Do palanquin, dholi, palna, tonjon with eight bearers	1 0 0
26	Do do do with six bearers	0 12 0
27	Do do do with four bearers	0 8 0
28	Do do do with two bearers	0 4 0

N. B.—No toll will be levied from foot-passengers.

Lease for levying tolls on Belur bridge for twelve months from 1st July 1906 to 30th June 1907.

(1) Notice is hereby given that the lease of the right of collecting tolls on the Belur bridge, for twelve months from 1st July 1906 to 30th June 1907, will be sold by public auction at the Belur Taluk Cutcherry at noon on Thursday the 31st May 1906.

Written tenders will be received by the Amildar of the Belur Taluk up to the date of sale.

(2) The highest tender or bid, if approved, will be accepted by the Deputy Commissioner who also reserves to himself the right of accepting or rejecting the highest or any bid without assigning any reason therefor.

(3) The person whose tender or bid is provisionally accepted on the date of sale will be required to deposit at once three months' instalments of the amount of the tender or bid plus local cess and upon the confirmation of the tender or bid to pay the remaining amount with local cess in nine equal monthly instalments to the Belur Taluk Treasury, on or before the 20th of every month commencing from 20th July 1906, the deposit being appropriated for the 10th, 11th and 12th instalments. He shall furnish two sureties for the regular payment of the monthly instalments and execute the required agreement on stamp paper within three days from the date of confirmation of the sale being intimated to him. Failure to comply with these conditions shall render the contract liable to re-sale at the risk of the purchaser, and any loss that may accrue to Government will be summarily recovered by the distraint and sale of his or of the surety's property.

(4) Any instalment that may not be paid on or before the prescribed date shall be charged with interest at 6 per cent per annum.

(5) The contractor shall be required to pay local cess at the rate of one anna per rupee on the amount of his contract.

(6) The arrears due by the contractor or his sureties shall be recovered under the rules in force for the recovery of arrears of land revenue.

(7) The contractor will be required to bind himself to have a true and regular account kept, showing the daily collections, and it shall be open to inspection by the Deputy Commissioner, Revenue Division Officer, Amildar or others deputed by them.

(8) The contractor will be further required to bind himself and his employees not to levy any tolls other than those enumerated in the schedule annexed and to conform to the rates therein laid down, any contravention of which will render liability to legal action and forfeiture of the contract.

(9) The contractor shall levy no tolls for the passage of troops or Military stores or equipages or of any Police or other Government officers on duty or on passage of any property *bonâ fide* belonging to Government as established by the production of a certificate from the Head of the Department to which it belongs.

(10) A table of the authorized tolls shall be legibly written in English and in Kanarese and put up by the contractor in a conspicuous place near the toll-gate.

(11) The contractor shall not collect tolls at any place other than that fixed by Government, *viz.*, at the toll-gate.

(12) The contractor shall generally conform to the rules laid down in the late Chief Commissioner's Notification No. 274, dated 4th November 1876.

(13) Further particulars (if any be required) can be obtained on application to the Deputy Commissioner, Hassan District.

Schedule of authorized toll rates leviable on the Belur bridge Hassan District.

No.	Particulars	Laden	Unladen
		Rs. a. p.	Rs. a. p.
1	On every four-wheeled carriage	0 8 0	0 4 0
2	Do two-wheeled carriage or cart	0 4 0	0 2 0
3	Do buffalo or bullock	0 0 6	.....
4	Do elephant	1 0 0	1 0 0
5	Do camel	0 8 0	0 8 0
6	Do horse, if laden or ridden	0 1 0	0 1 0
7	Do do if unladen or led	.....	0 1 0
8	Do ass, if laden or ridden	0 0 6	.....

NOTE.—(1) No toll will be levied from foot-passengers.
(2) Manure carts will be regarded as unladen carts.

(3) Government servants travelling on duty, *i.e.*, the animals and conveyance carrying them and their baggage, will be exempted from the levy of tolls.

(4) Unladen bullocks and buffaloes as well as cows, calves and heifers passing on the bridge will enjoy exemption from tolls.

(5) Only one toll is levied on carts, horses, etc., passing on the bridge within twenty-four hours.

M. A. NARAYANA IYENGAR,
for *Dy. Comr.*

SHIMOGA DISTRICT.

Abstract Notification dated 3rd May 1906.

It is hereby notified for general information that the exclusive right of transporting passengers, goods, vehicles, animals, etc., and of collecting tolls at the ferries in this district for one year from 1st July 1906 to 30th June 1907, will be put up to auction by the Amildar or Sheristadar at each taluk head-quarters, subject to the confirmation by the Deputy Commissioner.

For further particulars, see original notification published at page 762 of the *Mysore Gazette*, dated 10th May 1906.

M. S. NARAYAN RAO,
Deputy Commissioner.

Dated 18th May 1906.

It is hereby notified for general information that the right of levying tolls on carts entering the limits of the Shimoga Town Municipality during the year 1906-07 will be sold by public auction in the office of the President, Shimoga Municipal Board, at noon on the 12th June 1906 by the President of the Shimoga Municipality. The tolls are to be levied at rates given below:—

		Rs.	a.	p.
1.	Carts drawn by one or more pairs of bullocks, when full ...	0	4	0
2.	Do do do when empty ...	0	2	0
3.	Do by one bullock, when full	0	2	0
4.	Do do when empty	0	1	0

2. The President reserves to himself the right of accepting or rejecting any bid without assigning any reason for the same.

3. Every bidder shall deposit Rs. 100 as earnest money before he is permitted to bid, which, except in the case of the bidder whose bid is accepted, will be returned at the close of the sale.

4. So much as is necessary to make up one-twelfth of the amount of the accepted bid should be paid at once, another two-twelfths before the 25th June 1906, and the remaining three-fourths in nine equal monthly instalments on the 20th of every month, beginning from July 1906.

5. In case of default to pay one-fourth of the amount of the accepted bid within the periods stated, the sale will be cancelled and the earnest money forfeited. In case of subsequent defaults, the amount paid until then will be forfeited and the President will be at liberty to call for tenders for the remaining period or to sell the right by public auction or otherwise deal with the collection of tolls as he may think fit.

6. Interest will be charged for any instalments that may not be paid on or before the prescribed date at the rate of six per cent per annum.

7. A daily account should be maintained of the actual collections made by the contractor, and it should be open to inspection at all times by the Vice-President of the Board, Amildar of the Shimoga Taluk and such other officers as the President of the Board may authorize for the purpose. At the end of every month, the account should be submitted to the Vice-President for check.

8. All carts that are regularly assessed to the Municipality will receive a pass which will serve to distinguish them from other carts, and carts thus covered by a pass are exempt from the payment of tolls.

9. A second toll should not be levied on one and the same cart within twenty-four hours.

10. No toll should be levied on carts engaged in connection with the passage of troops or Military stores or equipages or belonging to Police officers travelling on duty or belonging to Government when such exemption is claimed on the authority of a certificate granted by the Head of the Department to which it belongs.

11. A table of tolls authorized to be levied on carts shall be legibly written in English and Kannada and put up by the contractor in a conspicuous place near each toll-gate.

12. The levy of tolls on carts shall be governed by the late Chief Commissioner's Notification No. 274, dated 4th November 1876.

M. S. NARAYAN RAO,
President.

KADUR DISTRICT.

Notice dated 10th May 1906.

The right of collecting fees at the weekly markets in the Municipalities of Chikmagalur, Tarikere and Yedahalli and in the Sakrepatna Union for the official year, *i. e.*, from 1st July 1906 to the 30th June 1907, will be sold by public auction by the Vice-President of the Chikmagalur Municipality and the Amildar of Tarikere, the Deputy Amildar of Yedahalli and the Amildar of Kadur, respectively, at their offices at 11 A.M. on the dates specified against each place below :—

Place.	Date of sale.
Chikmagalur, Tarikere, Yedahalli, Sakrepatna...	Monday the 11th June 1906.

2. The successful purchaser must collect fees only at the rates noted in the annexed schedule and at no higher rate, and only on carts and animals, etc., brought on sante days within the market premises as per annexed schedule.

3. The sale is subject to confirmation by the President of the Municipalities and District Board, Kadur District, who reserves to himself the power of refusing the highest or any bid that may be offered without assigning any reason therefor.

4. The contract amount is payable in twelve equal monthly instalments on or before the 10th of the month following that in which each instalment falls due.

5. The contractor shall pay, as soon as the sale is closed, a deposit equal to two months' instalments for the due performance of the contract. The amount in deposit will, if the conditions of the contract are complied with, be credited towards the instalments due for the last two months of the contract.

6. If the deposit is not made immediately after the close of the sale, the contract will be resold at the risk of the first purchaser. If the default is made in the payment of the instalment, interest at one pie per rupee per month will be levied on the amount due till the date of payment, and the unexpired portion of the contract will also be liable to be sold again at the discretion of the President, and the deficit, if any, will be recovered from the first contractor, who shall not be entitled to the profits.

7. No remission or abatement of the contract amount or compensation shall on any account whatever be claimable by the contractor.

8. The contractor is also bound to keep an account showing in detail the daily collections, and it shall be open to inspection by the Taluk and District authorities.

9. In the event of a breach of the above rules on the part of the contractor or his servants, the contract will be liable to cancellation.

SCHEDULE OF FEES.

No.	Items	Chikmagalur	Tarikere	Yedahalli	Sakrepatna
		Rs. a. p.	Rs. a. p.	Rs. a. p.	Rs. a. p.
1	For every cart laden	0 1 0	0 1 0	0 1 0	0 1 0
2	Do cart unladen	0 0 3	0 0 3	0 0 3	0 0 6
3	Do bullock, cow, buffalo or pony, if laden	0 0 3	0 0 6	0 0 6	0 0 6
4	Do ass unladen	0 0 1	0 0 3	0 0 3	0 0 3
5	Do head load	0 0 3	0 0 1	0 0 1	0 0 3
6	Do bullock, cow, buffalo or pony, if unladen	.....	0 0 3	.....	.....
7	Sheep or goat	.....	0 0 1	0 0 1	.....
8	Gudara or tent	0 1 0	.....	.....	0 1 0
9	Stalls in the market buildings	0 2 0	.....	.....	.....
10	Petty shop	.....	.....	.....	0 0 6

M. CHENGIAH CHETTY,
President, Local Fund Board.

Notification dated 12th May 1906.

It is hereby notified that in satisfaction of arrears of land revenue due by Dod Devarappa of Lakshmisagar village, Tarikere Taluk, revenue defaulter, the undermentioned immovable property will be sold by public auction at the Taluk Cutcherry on the 27th June 1906 by the Divisional Assistant Commissioner. The sale will commence at 11 A.M., and the property will be knocked down to the highest bidder without reserve.

2. The amount of revenue payable by the defaulter on the property for the year 1905-06 is Rs. 82-11-10, as shown in detail in the statement at foot.

3. Purchasers will be required to deposit twenty-five per cent of the purchase money at the time of sale, and where the remainder of the purchase money may not be paid within fifteen days from the date of the sale, the money so deposited shall be liable to forfeiture.

4. When such deposit shall not be made, nor the remaining purchase money paid up, the property will be re-sold at the expense and risk of the first purchaser.

5. The sale shall be stayed, if the defaulter or any person acting on his behalf, or claiming an interest in the property, tenders the full amount of the arrears of revenue with the interest and other charges, provided such tender be made before the property is knocked down.

6. The sale of the property will not become absolute until confirmed by the Deputy Commissioner or by some other officer duly authorized to confirm the same.

7. Purchasers having completed the payment of the purchase money will, as soon as the sale has been confirmed by the Deputy Commissioner, be placed in immediate possession, and the property will be registered in the name of the purchaser and a certificate of sale, signed and sealed by the Deputy Commissioner, will be granted to him. It is to be distinctly understood that the Government are not responsible for errors of description or in estimated extent.

8. Provided parties deeming themselves aggrieved by the sale, shall be at liberty to appeal to the Deputy Commissioner within thirty days from the day of sale, and also to appeal to Government against his order within the time prescribed by law, and the purchase shall be conditional on the final order in such appeal.

SCHEDULE.

Taluk	Hobli	Village	Name of defaulter	Description of property						Amount of arrears due to Government including notice fees, etc.
				Building		Land				
				Name of building	Estimated value	Number or name of land	Dry, wet or garden	Area	Assessment	
								A. g.	Rs. a. p.	
Tarikere.	Sivane.	Jodi Lakshmisagar.	Dod Devarappa.	Entire village	...	Dry.		271 4	171 13 8	Rs. a. p. Land Revenue (Jodi) ... 71 0 0 Local Fund ... 10 11 10 Process fees ... 1 0 0 Total ... 82 11 10 Besides this, interest up to date of sale will also fall due.

NOTE.—The sale is free from all tenures, encumbrances and rights created by the defaulter or any of his predecessors in title or in anywise subsisting against him.

V. KRISHNA RAO,
for *Dy. Comr.*

TUMKUR DIVISION.

Notification dated 5th May 1906.

Rupees 150 (one hundred and fifty only) due to contractor Rangaiya on account of earnest money deposited by him for restoring Chikmalur tank has been outstanding in the accounts of this office since July 1905. It is hereby notified that if the party does not present himself in the Executive Engineer's office at Tumkur to receive payment within a period of one month from the date of publication of this notification, the amount will be credited to Government as unclaimed deposits.

C. MADAVA RAO,
Executive Engineer.

MYSORE DIVISION.

Notice is hereby given that sealed tenders will be received at the office of the Executive Engineer, Mysore Division, up to 15th June 1906, for restoring Kagalwadi tank, Registered No. 48, Chamrajnagar Taluk. An approximate estimate of quantities is given below. These quantities are not guaranteed. The work should be completed by the end of March 1907.

2. The plans, detailed estimate and conditions may be seen at the Executive Engineer's office at Mysore between the hours of 11 A.M. and 5 P.M.

3. Tenders should be submitted on printed forms which may be obtained from the Executive Engineer. The tenders should be accompanied by a statement in the form given below, showing the rates at which the different items specified will be executed.

4. Each tender must be accompanied by a deposit of Rs. 300 in cash or Government Promissory Notes, as earnest money, and be superscribed "Tender for restoring Kagalwadi tank, Registered No. 48, Chamrajnagar"; in default of which, tenders will be rejected.

5. The final acceptance of any tender will rest with the Superintending Engineer, who does not bind himself to accept the lowest or any tender or to assign any reason whatever for the rejection of any tender.

6. Within eight days of the acceptance of the tender, the successful competitor will be required to execute the usual contract bond; in default of which, his tender will be considered cancelled, and his earnest money will be forfeited.

7. The name of the successful competitor, whose tender has been accepted, will be posted on the notice board in the Executive Engineer's office in due course. No enquiries regarding the acceptance or rejection of a tender will receive any reply.

8. On acceptance of one of the tenders, the earnest money on rejected tenders will be returned.

Estimate for repairing the damaged portion of Kagalwadi tank, Registered No. 48, Chamrajnagar Taluk.

Items of work	Per	Quantity
Bund R. L. 56·00—		
Earthwork	C. yd.	2,826
Turfing	S. yd.	12,958
Rough stone work, new	C. yd.	2,308
Old rough stone with fresh jelly...	"	659
Gravel backing	"	743
Gravel to top of bund	"	540
Waste-weir No. 1—		
Burnt brick in surki mortar	C. ft.	1,827
Burnt stone slabs (old)	S. ft.	522
Rough stone work, new	C. yd.	481
Do do old	"	524
Rough stone new, jelly packing	"	389
Waste-weir No. 2—		
Burnt brick in surki mortar	C. ft.	232
Burnt stone slabs, old	S. ft.	93
Rough stone work, new	C. yd.	117
Do do old	"	83
Waste-weir No. 3—		
Burnt brick in surki mortar	C. ft.	232
Burnt stone slabs, old	S. ft.	93
Rough stone work, new	C. yd.	84
Do do old	"	100

V. V. KARVE,
for *Executive Engineer.*

MYSORE JAIL.

The undersigned invites the attention of the public to the detailed notification dated 1st May 1906, published on page 790 in the *Mysore Gazette*, dated 17th May 1906, for the supply of ration articles, etc., to the Mysore Jail during the year 1906-07.

T. S. NANJAPPA,
Ag. Superintendent.

MYSORE GOVERNMENT METEOROLOGICAL DEPARTMENT.

Monthly Means of Meteorological Observations for April 1906.

	BANGALORE	MYSORE	HASSAN	CHITALDRUG
Height of Observatory above Sea Level	3,021 ft.	2,518 ft.	3,091 ft.	2,405 ft.
Barometer (red. to 32°F.) ...	26·885	27·361	26·830	27·451
Temperatures in shade :—				
Daily mean dry ...	83·6	84·6	81·4	86·8
Daily max. do ...	97·2	98·5	98·0	100·4
Daily min. do ...	71·1	71·6	67·2	74·3
Daily mean wet ...	66·8	69·6	68·0	69·0
Daily minimum wet ...	62·8	66·6	64·5	65·1
Temperatures of Radiation :—				
Daily max. Solar Heat in Vacuo	149·9	...	...	...
Daily min. Temp. on Grass	68·0	...	...	...
Rainfall—Total in inches ...	0·09	0·10	0·19	0·00
Wind Direction (daily mean) ...	S by W	S	S S W	S W
Velocity (miles per day) ...	173	225	73	144
Clear Sky : Daily percentage ...	79	55	65	89
Bright Sunshine : Hours Daily	9·7	...	...	...

N. VENKATESA IYENGAR,
for *Director of Meteorology in Mysore.*

Dated 21st May 1906.

MYSORE GOVERNMENT CENTRAL PRESS.

Dated 8th May 1906.

Notice is hereby given that old and unserviceable articles of the Government Central Press, as specified in the annexed list, will be sold by public auction on Friday the 15th June 1906, at 2 P.M., on the Press premises. The highest bidder at the auction shall pay the purchase money before the articles are removed :—

No.	Description	Quantity	Remarks
1	Ink roller stocks of sizes	10	
2	Broken writing tables, chairs, benches, etc.	1 lot	
3	Binder's table and roller racks	1 ,,	
4	Type cases	60	
5	Wooden galleys and type plates	70	
6	Compositors' stools	10	
7	Zinc galleys	19	
8	Litho polishing stone	1	
9	Do stone	1	
10	Palette knife	1	
11	Glue pot	1	
12	Wooden tubs, small	3	
13	Binders' knives	2	
14	Type-holders (binders')	2	
15	Glazed tissue boards, pieces	480	
16	Lubricators (tin)	6	
17	Wooden pumps	2	
18	Litho scraper	1	
19	"Honors" enumerators	3	
20	Paste kettles	2	
21	Aluminium kettle	1	
22	Iron pan	1	
23	Binders' laying presses	2	
24	Bench vice (large)	1	
25	Composing sticks	20	
26	Litho rollers	4	
27	Empty kerosene oil tins	180	
28	,, ink tins	50	
29	,, roller composition tins	40	
30	Bellows	2	
31	Cotton belting	70 feet	
32	Oil cans	4	
33	Caster's rubbing stone	1	
34	Hanging lamps	9	
35	Iron drums	2	
36	Brass rules, locks, etc.	1 lot	
37	Iron bars, springs, cams, locks, etc.	1 ,,	
38	Dealwood type cases	1 ,,	
39	Printing ink (of colors)	1 ,,	
40	Map varnish	2 tins	
41	Litho transfer paper	1 roll	
42	,, retransfer ink	5 cakes	
43	,, crayons	20 packets	
44	Leather pieces	1 lot	
45	Machine and press blankets, cloths, etc.	1 ,,	
46	Files	4	
47	Wooden casks	3	
48	Gelatine	25 lbs.	
49	Brushes, mallets, planers, etc.	1 lot	
50	Zinc tub	1	
51	Vaseloid	1 tin	
52	Guttapercha for machines	1 roll	
53	Type-casters' scrapers	3	
54	Punches (Sanskrit, Kanarese and Telugu)	1 lot	
55	Chases of sizes (broken)	1 ,,	

C. H. YATES,
Supt., Govt. Press.

MYSORE GOVERNMENT METEOROLOGICAL DEPARTMENT.

Daily Means of Observations for the Week Sunday 6th to Saturday 12th May 1906.

No.	BANGALORE	Sunday 6	Monday 7	Tuesday 8	Wednesday 9	Thursday 10	Friday 11	Saturday 12
1	Barometer red. to 32° F.	26·848	26·828	26·808	26·807	26·877	26·891	26·883
2	Daily Barometric range	·167	·153	·155	·133	·116	·146	·133
3	Mean Dry Temperature in shade	85·0	82·4	82·8	83·3	82·8	85·3	83·0
4	Maximum do	97·0	95·3	98·1	98·6	95·8	96·1	94·2
5	Minimum do	73·6	70·5	72·5	69·3	70·8	74·8	72·8
6	Daily range of do	23·4	24·8	25·6	29·3	25·0	21·3	21·4
7	Mean Wet Temperature in shade	70·0	69·9	67·9	68·2	69·6	70·4	70·6
8	Minimum do	64·4	66·7	66·1	65·7	66·1	67·1	67·4
9	Pressure of Aqueous Vapour	·620	·594	·547	·487	·590	·581	·612
10	Humidity	49	53	48	37	51	48	54
11	Wind Vely. in Miles p day to 8 A. M	157	144	159	157	150	150	161
12	Mean Wind Direction	N N W	W b N	W b S	N N W	S	E S E	S W
13	Rainfall in inches to 8 A.M.	0	0·07	0	0·02	0·09	0	0
14	Total Rainfall from 1st January	1·73	1·80	1·80	1·82	1·91	1·91	1·91
15	Per cent of Cloudy Sky	60	83	43	23	47	63	70
16	Character of Weather	Fine	Thunder storm	Thunder storm	Thunder storm	Thunder storm	Distant lightning	Distant lightning

533

MYSORE GOVERNMENT METEOROLOGICAL DEPARTMENT.

Daily Means of Observations for the Week Sunday 6th to Saturday 12th May 1906.

No.	MYSORE.	Sunday 6	Monday 7	Tuesday 8	Wednesday 9	Thursday 10	Friday 11	Saturday 12
1	Barometer red. to 32° F.	27·33	27·322	27·297	27·294	27·357	27·377	27·398
2	Daily Barometric range	·178	·161	·169	·126	·122	·141	·115
3	Mean Dry Temperature in shade	85·2	81·4	84·2	83·2	81·9	81·3	77·5
4	Maximum do	99·0	92·8	97·1	98·1	93·9	91·8	90·1
5	Minimum do	73·1	70·4	72·1	71·7	70·8	72·0	65·8
6	Daily range of do	25·9	22·4	25·0	26·4	23·1	19·8	24·3
7	Mean Wet Temperature in shade	70·7	71·5	70·5	70·5	71·0	72·2	71·6
8	Minimum do	60·1	68·4	69·5	67·7	66·9	69·8	65·8
9	Pressure of Aqueous Vapour	·641	·654	·575	·589	·661	·683	·732
10	Humidity	52	60	48	47	58	61	71
11	Wind Vely. in Miles p. day to 8 A.M.	233	217	197	181	219	217	185
12	Mean Wind Direction	N W b N	W b N	W b N	N b W	N b E	N W b N	N W b W
13	Rainfall in inches to 8 A.M.	0	0·47	0	0	0·04	0·12	2·26
14	Total Rainfall from 1st January	0·95	0·42	1·42	0·42	1·46	1·58	3·84
15	Per cent of Cloudy Sky	100	90	30	97	87	97	87
16	Character of Weather	Cloudy	Thunder storm	Fine	Thunder storm	Thunder storm	Cloudy	Thunder storm

MYSORE GOVERNMENT METEOROLOGICAL DEPARTMENT.

Daily Means of Observations for the Week Sunday 6th to Saturday 12th May 1906.

No.	HASSAN	Sunday 6	Monday 7	Tuesday 8	Wednesday 9	Thursday 10	Friday 11	Saturday 12
1	Barometer red. to 32° F.	26·808	26·772	26·767	26·763	26·828	26·850	26·849
2	Daily Barometric range	·152	·153	·134	·122	·092	·089	·111
3	Mean Dry Temperature in shade.	83·8	81·1	81·4	80·9	80·8	77·1	78·6
4	Maximum do	98·6	96·8	97·4	95·8	92·8	89·4	91·6
5	Minimum do	70·9	66·9	68·8	66·6	69·6	66·9	69·4
6	Daily range of do	27·7	29·9	28·6	29·2	23·2	22·5	22·2
7	Mean Wet Temperature in shade	72·3	69·8	68·0	66·9	70·5	68·9	72·2
8	Minimum do	68·1	65·4	63·9	63·6	65·5	65·8	68·3
9	Pressure of Aqueous Vapour	·684	·594	·555	·481	·665	·616	·734
10	Humidity	56	52	47	39	60	61	70
11	Wind Vely. in Miles p. day to 8 A.M.	90	71	72	92	82	59	57
12	Mean Wind Direction	N W b W	N E	W b N	N bE	S E b E	N E	W N W
13	Rainfall in inches to 8 A. M.	0	0·65	0·02	0·28	0	0·13	0
14	Total Rainfall from 1st January	0·29	0·94	0·96	1·24	0·24	1·37	1·37
15	Per cent of Cloudy Sky	60	73	33	47	77	90	77
16	Character of Weather	Fine passing clouds	Thunder storm	Thunder storm	Thunder storm	Thunder storm	Thunder storm with hail	Distant thunder

MYSORE GOVERNMENT METEOROLOGICAL DEPARTMENT.

Daily Means of Observations for the Week Sunday 6th to Saturday 12th May 1906.

No.	CHITALDRUG	Sunday 6	Monday 7	Tuesday 8	Wednesday 9	Thursday 10	Friday 11	Saturday 12
1	Barometer red. to 32° F.	27·438	27·395	27·377	27·391	27·441	27·493	27·465
2	Daily Barometric range	·162	·159	·134	·142	·126	·125	·143
3	Mean Dry Temperature in shade	8·62	85·3	86·3	88·4	85·8	80·6	84·8
4	Maximum do	99·0	97·1	100·3	102·0	98·6	92·2	96·2
5	Minimum do	73·9	73·6	73·0	75·8	74·4	69·5	73·6
6	Daily range of do	25·1	23·5	27·3	26·2	24·2	22·7	22·6
7	Mean Wet Temperature in shade	74·4	69·2	68·	67·1	72·0	71·5	74·5
8	Minimum do	70·8	67·4	62·9	64·1	66·7	66·0	70·4
9	Pressure of Aqueous Vapour	·720	·518	·519	·407	·684	·709	·752
10	Humidity	56	44	42	30	54	67	63
11	Wind Vely. in Miles p. day to 8 A M	192	112	218	220	161	138	142
12	Mean Wind Direction	W b N	W b S	W b N	W b N	N N W	E b N	W b S
13	Rainfall in inches to 8 A. M.	0	0·11	0	0	0	0·79	0
14	Total Rainfall from 1st January	1·24	1·35	1·35	1·35	1·35	2·14	21 4
15	Per cent of Cloudy Sky	13	73	3	67	50	83	37
16	Character of Weather	Fine ; sultry	Threatening	Fine clear ; sultry	Sultry	Sultry	Thunder storm	Fine ; sultry

Dated 17th May 1906.

N. VENKATESA IYENGAR, for *Director of Meteorology.*

The Mysore Gazette.

VOL. 41.] PUBLISHED BY AUTHORITY. [No. 21.

BANGALORE, THURSDAY, MAY 24, 1906.

PART IV.

OFFICIAL PAPERS.

Season Report for the Week ending with the 20th Saturday in 1906 (*19th May* 1906).

District and Station.	Rainfall up to 8 A.M. on Saturday. This week.		Last ten years' average for the corresponding week.		Up to the end of the week from 1st January 1906. This year.		Average of past ten years.		Excess (+) or defect (—) of column 4 compared with column 5.		Price of food grains in seers per rupee and market fluctuations in prices of food grains.			
1	2		3		4		5		6		7			
	I.	c	I.	c.	I.	c.	I.	c.	I.	c.		This week.	Past week.	Past ten year' fortnightly average.
												Seers	Seers.	Seers.
BANGALORE.														
Bangalore C. & M. Station ...	...	69	...	...	...	69	..	.	..	..				
" City & Taluk...	...	83	1	6	2	82	4	64	— 1	82	Rice, 2nd sort.	6·50	6·50	9·15
Hoskote ...	...	46	1	1	1	22	4	48	— 3	26				
Dodballapur ...	...	30	..	86	...	73	5	24	— 4	51	Ragi	16·00	17·00	21·81
Nelamangala ...	...	43	...	99	1	30	4	57	— 3	27	Kulthi	10·75	11·00	...
Kankanhalli ...	1	30	1	38	3	36	5	56	— 2	20	Kadale	8·00	8·00	10·75
Magadi ...	..	15	1	...	..	19	3	64	— 3	45				
Channapatna ...	2	51	1	20	3	67	5	44	— 1	77				
Anekal ...	1	10	1	32	3	59	5	37	— 1	78				
Devanhalli ...	...	48	1	45	1	..	5	15	— 4	15				
Closepet ...	2	42	1	48	4	25	4	87	— 0	62				
District average...	1	...	1	17	2	21	4	90	— 2	69				
KOLAR.														
Kolar ...	...	15	1	...	1	18	3	97	— 2	79				
Bowringpet ...	1	38	1	.	1	95	3	29	— 1	34	Rice, 2nd sort.	7·00	7·00	9·40
Chintamani ...	...	...	1	24	1	...	2	85	— 1	85				
Mulbagal ...	...	13	...	52	2	12	2	28	— 0	16	Ragi	15·00	16·00	24·20
Sidlaghatta ...	...	...	1	29	...	36	3	9	— 2	73	Kulthi	14·00	14·00	...
Chikballapur ...	...	58	1	32	3	2	4	75	— 1	73	Kadale	9·00	9·00	9·20
Bagepalli ...	...	23	...	39	1	43	1	80	— 0	37				
Goribidnur ...	...	13	...	69	...	95	2	24	— 1	29				
Malur ...	..	96	..	98	2	41	3	75	— 1	34				
Srinivaspur ...	...	15	...	93	2	7	3	7	— 1	...				
Gudibanda ...	...	35	...	50	1	19	2	13	— 0	94				
District average...	...	37	..	90	1	61	3	2	— 1	41				
TUMKUR.														
Tumkur ...	..	40	1	3	1	82	4	52	— 2	70				
Maddagiri ...	..	17	...	45	...	88	2	34	— 1	46				
Chiknayakanhalli ...	...	25	...	89	1	75	4	34	— 2	59	Rice, 2nd sort.	7·50	7·50	9·30
Sira ...	...	28	...	63	1	81	4	11	— 2	30				
Gubbi ...	1	26	...	89	1	78	3	35	— 1	57	Ragi	16·00	16·00	25·90
Tiptur ...	...	26	...	73	..	67	4	1	— 3	44	Kulthi	12·00	12·00	...
Pavagada ...	...	...	..	63	...	..	2	11	— 2	11	Kadale	8·00	8·00	9·60
Kunigal ...	2	47	..	82	3	8	2	87	+ 0	21				
Koratagere ...	...	..	...	47	1	10	2	48	— 1	38				
Turuvekere ...	...	60	...	84	2	2	2	93	— 0	91				
District average...	...	55	...	74	1	49	3	19	— 1	70				

District and Station.	Rainfall up to 8 A. M. on Saturday.										Price of food grains in seers per rupee and market fluctuations in prices of food grains.			
	This week.		Last ten years' average for the corresponding week.		Up to the end of the week from 1st January 1906.									
					This year.		Average of past ten years		Excess (+) or defect (—) of column 4 compared with column 5					
1	2		3		4		5		6		7			
	I.	c.	I	c.	I.	c.	I.	c.	I.	c.		This week	Past week.	Past ten years fortnightly average.
												Seers.	Seers.	Seers.
MYSORE.														
Mysore ..	...	26	1	52	5	45	5	36	+0	9				
Chamrajnagar ...	2	1	2	18	2	23	7	40	—5	17				
Seringapatam ...	1	39	...	14	2	61	3	54	—0	93	Rice, 2nd sort.	8·00	8·00	10·17
Hunsur ...	.	46	1	87	3	30	5	56	—2	26				
Yedatore ...	...	43	...	67	3	62	4	22	—0	60	Ragi	14·00	14·00	21·44
Heggaddevankote ...	...	91	1	49	2	90	9	92	—7	2	Kulthi	12·00	12·00	...
Gundlupet ...	2	15	1	11	4	93	5	83	—0	90	Kadale	9·00	9·00	10·24
Nanjangud ...	1	9	...	97	2	69	5	59	—2	90				
T.-Narsipur ...	...	45	1	43	2	85	6	1	—3	16				
Malvalli ..	1	47	1	4	3	5	4	14	—1	9				
Mandya ...	1	38	1	47	4	2	4	34	—0	32				
Krishnarajpete ...	1	25	1	47	4	0	4	80	—0	80				
Nagamangala ...	3	72	...	69	5	82	3	8	+2	1				
District average...	1	31	1	23	3	65	5	42	—1	77				
HASSAN.														
Hassan ...	...	71	1	40	2	19	4	94	—2	75				
Manjarabad (Saklespur)	1	86	1	47	3	63	5	31	—1	68				
Arkalgud ..	..	46	1	47	4	24	4	87	—0	63				
Belur ...	1	85	..	84	4	25	5	24	—0	99	Rice, 2nd sort.	8·00	8·00	10·35
Channarayapatna ...	1	12	1	5	3	9	4	25	—1	16				
Arsikere ...	...	74	1	47	1	51	4	42	—2	91	Ragi	16·00	16·00	24·26
Hole-Narsipur ...	...	73	1	40	4	91	4	52	+0	39	Kulthi	11·00	11·50	...
Alur ..	...	14	...	95	2	7	4	76	—2	69	Kadale	8·00	8·00	9·85
District average...	...	95	1	26	3	24	4	79	—1	55				
SHIMOGA.														
Shimoga ...	...	...	...	66	4	74	3	12	+0	62				
Channagiri ...	..	60	1	15	1	87	3	52	—1	65	Rice, 2nd sort	7·75	7·75	11·99
Honnali ...	...	...	...	95	2	5	4	11	—2	6				
Shikarpur ...	...	...	...	83	...	38	3	80	—3	42	Ragi	14·00	14·00	28·80
Sorab ...	...	5	..	55	..	52	2	74	—2	22	Kulthi	11·50	11·50	...
Sagar ...	...	..	...	56	2	54	3	15	—1	61				
Nagar (Kallurkatte) ..	...	...	...	54	..	91	2	48	—1	57				
Tirthahalli ...	...	...	...	57	1	63	3	33	—1	20				
Kumsi ...	...	...	..	91	1	41	4	2	—2	61				
District average...	...	7	..	74	1	77	3	47	—1	70				
KADUR.														
Chikmagalur ...	1	14	1	11	3	27	5	3	—1	76				
Kadur ..	1	45	1	6	1	64	3	67	—2	3	Rice, 2nd sort	7·50	7·50	10·40
Tarikere ...	2	10	1	47	3	4	5	19	—2	15				
Koppa ..	...	87	..	75	5	8	4	12	+0	96	Ragi	14·00	15·00	24·10
Mudgere ...	2	25	1	4	3	68	5	8	—2	20	Kulthi	10·00	11·00	...
Yedahalli ...	..	55	.	96	2	38	4	62	—2	24	Kadale	8·00	8·00	10·00
Sringeri ..	2	26	...	83	4	41	4	44	—0	3				
District average ..	1	51	1	3	3	35	4	70	—1	35				
CHITALDRUG.														
Chitaldrug ...	...	33	...	76	2	45	2	52	—0	7				
Challakere ...	..	..		43	...	12	2	48	—2	36	Rice, 2nd sort	7·50	7·50	10·45
Hiriyur ..	1	47	...	98	1	77	2	74	—0	97				
Holalkere ...	..	83	.	79	1	38	3	21	—1	83	Ragi	14·00	14·00	27·10
Davangere ...	1	..	1	2	2	46	2	87	—0	41	Kulthi	11·00	11·00	...
Molakalmuru ...	...	73	...	63	1	17	2	39	—1	22	Cholum	13·00	13·00	24·00
Jagalur ...	..	23	...	85	1	13	2	76	—1	63	Kadale	8·00	8·00	10·50
Hosdurga ..	1	26	..	82	1	71	2	46	—0	75				
Harihar ..	1	82	..	80	6	39	2	86	+3	53				
District average...	..	85	...	79	2	8	2	68	—0	60				
Provincial average...	...	83	...	98	2	42	4	2	—1	60				

Note—Rice (husked)—Oryza Sativa.
Ragi—Eleusine Corocana.
Kulthi—(Horse gram) Dolichos Biflorus.
Cholum—Sorghum Vulgare.
Kadale—(Bengal gram) Ciser Arietinum.

DISTRICT REPORTS.

8. Markets how supplied.

9. Progress of agricultural operations, state of standing crops, prospects and probable outturn of harvests, serious damage done to crops by insects or other natural calamities.

10. Prospects of season, tracts in which the rainfall has been insufficient, areas affected by scarcity, number of people under relief, and state of food stocks.

11. Public health.

12. Remarks as to the condition of agricultural stock, failure of pasturage of fodder, etc.

BANGALORE CIVIL AND MILITARY STATION.

		Normal.	*Current.*	
Prices of food grains—	Rice	... 10 to 11	6½ to 7	seers per rupee.
	Ragi	... 25 to 30	16 to 16½	

Agricultural operation—Collection of manure and ploughing.

Cattle are in good condition.

Water and fodder sufficient.

BANGALORE CITY AND TALUKS.

8. Market well supplied.

9. Almost throughout the district ploughing operations have commenced. Sessamum is reported to have been sown in some parts of Kankanhalli. Standing crops are in good condition.

10. Prospects of the season moderately good except within a radius of five miles round the Magadi Town, there has been rain throughout the district, and an appreciable quantity in the Closepet group of taluks. The tanks and kattes in this group have received from 2 to 3 months' supply. A general fall in the price of food stuffs is expected.

11. Public health generally good. Fever is reported to prevail in some parts of Kankanhalli, and small-pox in parts of Anekal and Dodballapur.

12. Cattle healthy. Dry fodder is sufficiently available for the time being. Water is available. In places where there has been no appreciable rain, wells are still resorted to. There has been no sinking of fresh wells during the week.

KOLAR.

8. Market fairly supplied, but prices are rising high.

9. There was no sowing during the week throughout the district. Vysakhi paddy is being harvested in some parts of Sidlaghatta.

10. Prospects of the season uncertain rains are anxiously expected. Food stocks are available in moderate quantity. Considerable difficulty is experienced for water for men and cattle.

11. Public health generally good. Small-pox is prevalent in parts of Kolar, Bowringpet Bagepalli and Goribidnur.

TUMKUR.

8. Market well supplied.

9. Paddy in Maddagiri, Sira, Pavagada, Koratagere; and Turuvekere; cholum in Sira; and sugar-cane in Kunigal are being harvested. Sugar-cane in Maddagiri; cholum in parts of Gubbi, and nat-ragi in Pavagada are sown. Standing Vysakhi paddy, sugar-cane and

nat-ragi crops in Gubbi and parts of Koratagere and Turuvekere are withering. The following is the estimated outturn of crops :—

Maddagiri—Paddy 4 to 12 annas.

Sira—Paddy 4 to 8 annas, cholum 2 to 4 annas.

Pavagada—Paddy 4 annas.

Kunigal—Sugar-cane 6 annas.

Koratagere—Paddy 4 annas.

Turuvekere—Paddy 8 to 12 annas.

10. Prospects of the season not encouraging. Food stocks available for the present. Supply of water in wells is diminishing all over the district. Some small tanks and kattes in parts of the district have received a small supply of water by the recent rains.

11. Public health generally good, except that small-pox prevails in Tiptur.

12. Cattle are showing signs of deterioration. The older cattle are dying. In parts of Chiknayakanhalli, Sira, Gubbi and Tiptur, date leaves are used as fodder for cattle. Cholum and kadale pretty extensively cultivated in tank beds, provided some fodder for cattle. Temporary wells are being sunk in tank beds, as also drinking water wells all over the district. Water in State Forests is also made available wherever needed. The leaves of avenue trees are used as fodder wherever it is found necessary.

MYSORE.

8. Market well supplied.

9. Standing crops such as sugar-cane and cotton in parts of Chamrajnagar; sugar-cane in parts of Seringapatam and Nagamangala; cholum, castor, togari, tadagani and sessamum in parts of Gundlupet; cotton, mulberry and cholum in parts of Nanjangud; sugar-cane, mulberry and cholum in parts of T.-Narsipur; mulberry, sugar-cane, sessamum, cholum and togari in parts of Malvalli; and sugar-cane, black and green grams in parts of Krishnarajpete are reported to be pretty fair. Cholum, ragi, togari, etc., are being sown in most taluks.

10. Prospects of the season are encouraging. There was rain in all the taluks, but more rain is still required. There are none under relief. Food stock sufficient.

11. Public health good throughout, but small-pox is still prevailing in parts of Heggaddevankote.

12. Cattle healthy in all taluks, except in parts of Heggaddevankote, where they are still suffering from foot and mouth disease. Water and fodder are generally available.

HASSAN.

8. Markety fairly well supplied. Prices high.

9. Sugar-cane in Hassan, Belur, Arsikere, Channarayapatna, Hole-Narsipur and Alur; and paddy in Hassan and Manjarabad and Arsikere are reported to be in a fair condition. Ragi in Hassan, and ragi and paddy in Arkalgud and Alur are being sown. Land is being prepared for sowing seeds. The probable outturn of standing crops in Hole-Narsipur is 8 annas.

10. Prospects of the season somewhat hopeful. More rain is wanted in all parts. There are none under relief. Food stocks are sufficient for the present.

11. Public health generally good. Small-pox is reported to be prevalent in some parts of the district.

12. Cattle generally healthy, but foot and mouth disease exists in parts of Hole-Narsipur. Water and fodder generally available except in parts of Channarayapatna and Arsikere.

SHIMOGA.

8. Market well supplied. Prices high.

9. Ploughing operations have commenced in all the taluks. More rains are necessary for seeds to sprout. Sugar-cane plants have revived.

10. Drinking water is available with difficulty. Men and cattle are suffering much on account of the failure of the monsoons.

11. Public health is generally good. Small-pox prevails in Sagar, Nagar and Tirthahalli, and cholera in Shikarpur.

12. The supply of fodder is limited. Cattle generally healthy.

KADUR.

8. Market fairly well supplied.

9. Ploughing is generally carried on in the district. Ragi in parts of Chikmagalur, and paddy in parts of Yedahalli are being sown. The standing crops of sugar-cane in parts of Tarikere and Yedahalli; kar-paddy in parts of Chikmagalur and Mudgere; and kar-paddy and sugar-cane in parts of Kadur and Koppa are in fairly good condition. The raiyats have in some parts commenced sowing seeds, but further operations are retarded for want of more showers.

10. Prospects of the season fair, but more rain is needed. Food stocks are available and sufficient for the present.

11. Public health generally good, except that small-pox prevails in parts of Chikmagalur, Kadur and Mudgere.

12. Cattle generally healthy. Water and fodder generally available.

CHITALDRUG.

8. Market well supplied.

9. The estimated outturn of crops harvested during the week is as follows:—

Challakere—Paddy 4 annas.

Hiriyur—Wheat and kadale 2 annas, cotton, cholum and togari 4 annas.

Paddy under kapile wells 8 to 10 annas.

It is reported that raiyats continue to be busy in preparing their lands for sowing purposes.

10. Prospects of the season fair. Food stocks available.

11. Public health good.

12. Cattle healthy. Water and fodder procurable in limited quantities.

BANGALORE,
23rd May 1906.

B. K. VENKATA VARADA IYENGAR,
Secy. to the Govt. of H. H. the Maharaja of Mysore,
Gen. & Rev. Dept.

Prices Current [Wholesale] of Food Grains, &c., at the Head-Quarters of the several Districts of the Mysore State during the fortnight ending 30th Apl. 1906.

ಸನ್ 1906ನೆ ಇಸವಿ ಏಪ್ರಿಲ್ ಮಾಹೆ 30ನೆ ತಾರೀಖಿಗೆ ಆಖೈರಾದ ಪಂಧ್ರಾವಾಡಾ ಬಾಬತು ಒಟ್ಟು ವ್ಯಾಪಾರದ ದುಕಾನಗಳಲ್ಲಿ ಪುರೋಖ್ತ ಆದ ಆಹಾರ ಜಿನಸೀ ವಗೈರೆ ನಿರಖುನಾಮಾ ಡಿಸ್ಟ್ರಿಕ್ಟ ಹೆಡ್ ಕ್ವಾರ್ಟರಗಳ ಬಾಬತು.

Prices per 10 maunds of $82\frac{2}{7}$ lbs. each ಮಣ 1ಕ್ಕೆ $82\frac{2}{7}$ ಪೌನುಗಳ ಮೇರಿಗೆ 10 ಮಣಕ್ಕೆ ಬರೀದಿ

Grains and Pulses ಧಾನ್ಯ ಮತ್ತು ಕಾಳುಗಳು

District ಡಿಸ್ಟ್ರಿಕ್ಟ	Rice unhusked (paddy) Oryza sativa ಭತ್ತ 2									Rice, best sort ಅವಲ್ ತರಹೆ ಅಕ್ಕಿ 3									Rice, common ಸಾಧಾರಣ ಅಕ್ಕಿ 4									Wheat Triticum sativum ಹೊಟ್ಟೆ ಗೋಧಿ 5									Barley Hordeum vulgare ಜವೆ ಗೋಧಿ 6								
	Present fortnight ಸುಜಕ್ಕರ್ ಪಂಧ್ರಾವಾಡಾ			Past fortnight ಗುಜಷ್ಟಾ ಪಂಧ್ರಾವಾಡಾ			Corresponding fortnight of last year ಗುಜಷ್ಟಾ ಸಾಲ್ ಪೊಕಾಬಿಲಾ ಪಂಧ್ರಾವಾಡಾ			Present fortnight ಸುಜಕ್ಕರ್ ಪಂಧ್ರಾವಾಡಾ			Past fortnight ಗುಜಷ್ಟಾ ಪಂಧ್ರಾವಾಡಾ			Corresponding fortnight of last year ಗುಜಷ್ಟಾ ಸಾಲ್ ಪೊಕಾಬಿಲಾ ಪಂಧ್ರಾವಾಡಾ			Present fortnight ಸುಜಕ್ಕರ್ ಪಂಧ್ರಾವಾಡಾ			Past fortnight ಗುಜಷ್ಟಾ ಪಂಧ್ರಾವಾಡಾ			Corresponding fortnight of last year ಗುಜಷ್ಟಾ ಸಾಲ್ ಪೊಕಾಬಿಲಾ ಪಂಧ್ರಾವಾಡಾ			Present fortnight ಸುಜಕ್ಕರ್ ಪಂಧ್ರಾವಾಡಾ			Past fortnight ಗುಜಷ್ಟಾ ಪಂಧ್ರಾವಾಡಾ			Corresponding fortnight of last year ಗುಜಷ್ಟಾ ಸಾಲ್ ಪೊಕಾಬಿಲಾ ಪಂಧ್ರಾವಾಡಾ			Present fortnight ಸುಜಕ್ಕರ್ ಪಂಧ್ರಾವಾಡಾ			Past fortnight ಗುಜಷ್ಟಾ ಪಂಧ್ರಾವಾಡಾ			Corresponding fortnight of last year ಗುಜಷ್ಟಾ ಸಾಲ್ ಪೊಕಾಬಿಲಾ ಪಂಧ್ರಾವಾಡಾ		
	Rs	a	p	Rs	a	p	Rs	a	p	Rs	a	p	Rs	a	p	Rs	a	p	Rs	a	p	Rs	a	p	Rs	a	p	Rs	a	p	Rs	a	p	Rs	a	p	Rs	a	p	Rs	a	p
Bangalore	23	8	2	23	8	2	15	10	9	57	3	11	51	1	9	44	11	2	49	5	7	44	11	6	73	10	7	37	13	8	36	13	9	31	13	4		*			*			*	
Kolar ...	22	0	0	22	0	0	20	0	0	57	0	0	57	0	0	50	0	0	53	0	0	53	0	0	44	0	0	50	0	0	50	0	0	40	0	0	50	0	0	50	0	0	40	0	0
Tumkur ...	22	0	0	22	0	0	18	0	0	63	0	0	63	0	0	45	0	0	48	0	0	48	0	0	44	0	0	58	0	0	58	0	0	39	0	0	29	0	0	29	0	0	18	0	0
Mysore ...	27	3	2	27	3	2	24	3	3	51	3	2	51	3	2	43	14	1	43	14	2	43	14	2	38	9	7	58	12	4	58	12	4	39	2	11	58	12	4		*			*	
Hassan ...	22	4	7	20	9	2	13	11	5	53	7	9	53	7	9	45	11	5	51	6	10	51	6	10	41	2	3	58	12	5	51	6	10	41	2	3	53	7	9	51	6	10	41	2	3
Shimoga ...	21	12	4	19	9	4	16	14	0	65	1	8	55	15	5	49	1	0	55	15	3	49	1	0	35	8	4	55	15	5	55	15	5	35	8	4		*			*			*	
Kadur ...	15	0	0	15	0	0	14	0	0	52	0	0	52	0	0	50	0	0	50	0	0	42	0	0	36	0	0	50	0	0	50	0	0	36	0	0	32	0	0	32	0	0	30	0	0
Chitaldrug	25	11	5	25	11	5	17	2	4	58	12	5	58	12	5	45	11	5	51	6	10	51	6	10	41	2	3	51	6	10	51	6	10	34	4	7	51	6	10	51	6	10	31	4	7

* Article not available.

Prices Current [Wholesale] of Food Grains, &c., at the Head-Quarters of the several Districts of the Mysore State during the fortnight ending 30th Apl. 1906—*contd.*

ಸನ 1906 ನೆ ಇಸವಿ ಏಪ್ರಿಲ್ ಮಾಹೆ 30ನೆ ತಾರೀಖಿಗೆ ಆಖೈರಾದ ಪಂಧ್ರವಾಡಾ ಬಾಬತು ಒಟ್ಟುವ್ಯಾಪಾರದ ದುಕಾನಗಳಲ್ಲಿ ಪುರೋಭಾಗ ಆದ ಆಹಾರಜಿನಸಿ ವಗೈರೆ ನಿರಖುನಾಮಾ-ಡಿಸ್ಟ್ರಿಕ್ಟ್ ಹೆಡ್‌ಕ್ವಾರ್ಟರ್‌ಗಳ ಬಾಬತು-ಸಕೇಪ.

District ಡಿಸ್ಟ್ರಿಕ್ಟ್	Prices per 10 maunds of 82⅔ lbs. each ಮಣ 1ಕ್ಕೆ 82⅔ ಪೌನುಗಳ ಮೇರಿಗೆ 10 ಮಣಕ್ಕೆ ಖರೀದಿ																													
	Grains and Pulses ಧಾನ್ಯ ಮತ್ತು ಕಾಳುಗಳು																													
	Cholam or javar Sorghum vulgare ಜೋಳ									Kambu or Bajara Pennisetum typhoideum ಸಜ್ಜೆ									Ragi Eleusine coracana ರಾಗಿ									Maize Zeamays ಮುಸುಕಿನ ಜೋಳ						Bengal gram Cicer arietinum ಕಡಲೆ								
	7									8									9									10						11								
	Present fortnight ಪುಜಕ್ಕರ್ ಪಂಧ್ರವಾಡಾ			Past fortnight ಗುಜಷ್ಟಾ ಪಂಧ್ರವಾಡಾ			Corresponding fortnight of last year ಗುಜಷ್ಟಾ ಸಾಲ್ ಪೊಕಾಬಿಲಿ ಪಂಧ್ರವಾಡಾ			Present fortnight ಪುಜಕ್ಕರ್ ಪಂಧ್ರವಾಡಾ			Past fortnight ಗುಜಷ್ಟಾ ಪಂಧ್ರವಾಡಾ			Corresponding fortnight of last year ಗುಜಷ್ಟಾ ಸಾಲ್ ಪೊಕಾಬಿಲಿ ಪಂಧ್ರವಾಡಾ			Present fortnight ಪುಜಕ್ಕರ್ ಪಂಧ್ರವಾಡಾ			Past fortnight ಗುಜಷ್ಟಾ ಪಂಧ್ರವಾಡಾ			Corresponding fortnight of last year ಗುಜಷ್ಟಾ ಸಾಲ್ ಪೊಕಾಬಿಲಿ ಪಂಧ್ರವಾಡಾ			Present fortnight ಪುಜಕ್ಕರ್ ಪಂಧ್ರವಾಡಾ			Past fortnight ಗುಜಷ್ಟಾ ಪಂಧ್ರವಾಡಾ			Corresponding fortnight of last year ಗುಜಷ್ಟಾ ಸಾಲ್ ಪೊಕಾಬಿಲಿ ಪಂಧ್ರವಾಡಾ			Present fortnight ಪುಜಕ್ಕರ್ ಪಂಧ್ರವಾಡಾ			Past fortnight ಗುಜಷ್ಟಾ ಪಂಧ್ರವಾಡಾ			Corresponding fortnight of last year ಗುಜಷ್ಟಾ ಸಾಲ್ ಪೊಕಾಬಿಲಿ ಪಂಧ್ರವಾಡಾ		
	Rs	a	p	Rs	a	p	Rs	a	p	Rs	a	p	Rs	a	p	Rs	a	p	Rs	a	p	Rs	a	p	Rs	a	p	Rs	a	p	Rs	a	p	Rs	a	p	Rs	a	p	Rs	a	p
Bangalore		*			*			*			*			*			*		22	13	9	21	10	6	21	10	5	3 maizes for 4 pies			3 maizes for 4 pies.			3 maizes for 4 pies.			46	1	7	46	1	7	32	10	5
Kolar ...		*			*			*			*			*			*		26	0	0	26	0	0	20	0	0		*			*			*		44	0	0	44	0	0	40	0	0
Tumkur ..		*			*			*			*			*			*		22	0	0	22	0	0	18	0	0		*			*			*		48	0	0	48	0	0	39	0	0
Mysore ..	27	14	2	27	14	2	18	4	6		*			*			*		†25	7	6	25	15	4	22	10	1		*			*			*		†41	2	3	43	4	10	35	4	3
Hassan ...		*			*			*			*			*			*		25	11	5	25	11	5	20	9	2		*			*			*		51	6	10	51	6	10	37	6	5
Shimoga ...	32	8	0	28	0	3	17	12	2		*			*			*		27	15	6	24	6	10	17	12	2		*			*			*		55	15	5	55	15	5	34	1	0
Kadur ...	22	0	0	22	0	0	16	0	0		*			*			*		25	0	0	25	0	0	16	0	0		*			*			*		50	0	0	50	0	0	37	0	0
Chitaldrug	31	10	4	31	10	4	17	2	4	25	11	5	25	11	5	17	2	4	27	6	10	27	6	10	17	2	4		*			*			*		51	6	10	51	6	10	34	4	7

* Article not available. † Prices gone down owing to fair supply to market.

Prices Current [Wholesale] of Food Grains, &c., at the Head-Quarters of the several Districts of the Mysore State during the fortnight ending 30th Apl. 1906--*contd.*

ಸನ 1906ನೆ ಇಸವಿ ಏಪ್ರೆಲ್ ಮಾಹೇ 30ನೆ ತಾರೀಖಿಗೆ ಆಖೈರಾದ ಪಂಧ್ರಾವಾಡಾ ಬಾಬತು ಒಟ್ಟು ವ್ಯಾಪಾರದ ದುಕಾನಗಳಲ್ಲಿ ಪ್ರಚಲಿತ ಆದ ಆಹಾರಜಿನಸಿ ವಗೈರೆ ನಿರಖ ನಾಮೂ ಡಿಸ್ಟ್ರಿಕ್ಟ ಹೆಡ್ ಕ್ವಾರ್ಟರಗಳ ಬಾಬತು ಸಶೇಷ.

District ಡಿಸ್ಟ್ರಿಕ್ಟ	Prices per 10 maunds of 82 2/7 lbs. each ಮಣ 1ಕ್ಕೆ 28 2/7 ಪೌನುಗಳ ಮೇರಿಗೆ 10 ಮಣಕ್ಕೆ ಖರೀದಿ																													
	Grains and Pulses ಧಾನ್ಯ ಮತ್ತು ಕಾಳುಗಳು																								Ghee (Clarified butter) ತುಪ್ಪ					
	Horse gram Dolichos biflorus ಹುರಳಿ						Arhar Cajanus indicus ತೊಗರಿ						Arhar Dal ತೊಗರಿ ಬ್ಯಾಳೆ						Kangani Setaria italica ನವಣೆ											
	12						13						14						15						16					
	Present fortnight ಸುಪ್ರಕಾರ ಪಂಧ್ರಾವಾಡಾ			Past fortnight ಗುಜಿಷ್ಟಾ ಪಂಧ್ರಾವಾಡಾ			Corresponding fortnight of last year ಗುಜಿಷ್ಟಾ ಸಾಲ ಮೊಕಾಬಿಲಾ ಪಂಧ್ರಾವಾಡಾ			Present fortnight ಸುಪ್ರಕಾರ ಪಂಧ್ರಾವಾಡಾ			Past fortnight ಗುಜಿಷ್ಟಾ ಪಂಧ್ರಾವಾಡಾ			Corresponding fortnight of last year ಗುಜಿಷ್ಟಾ ಸಾಲ ಮೊಕಾಬಿಲಾ ಪಂಧ್ರಾವಾಡಾ			Present fortnight ಸುಪ್ರಕಾರ ಪಂಧ್ರಾವಾಡಾ			Past fortnight ಗುಜಿಷ್ಟಾ ಪಂಧ್ರಾವಾಡಾ			Corresponding fortnight of last year ಗುಜಿಷ್ಟಾ ಸಾಲ ಮೊಕಾಬಿಲಾ ಪಂಧ್ರಾವಾಡಾ			Present fortnight ಸುಪ್ರಕಾರ ಪಂಧ್ರಾವಾಡಾ			Past fortnight ಗುಜಿಷ್ಟಾ ಪಂಧ್ರಾವಾಡಾ			Corresponding fortnight of last year ಗುಜಿಷ್ಟಾ ಸಾಲ ಮೊಕಾಬಿಲಾ ಪಂಧ್ರಾವಾಡಾ		
	Rs	a	p	Rs	a	p	Rs	a	p	Rs	a	p	Rs	a	p	Rs	a	p	Rs	a	p	Rs	a	p	Rs	a	p	Rs	a	p
Bangalore	26	5	4	25	13	9	25	5	1	24	6	1	24	6	1	30	7	7	45	11	5	45	11	5	45	11	5	*			*			*			420	0	0	420	0	0	551	6	10
Kolar ..	29	0	0	29	0	0	26	0	0	*			*			*			44	0	0	44	0	0	50	0	0	*			*			*			400	0	0	400	0	0	400	0	0
Tumkur ...	28	0	0	28	0	0	29	0	0	48	0	0	48	0	0	48	0	0	48	0	0	48	0	0	48	0	0	*			*			*			291	0	0	291	0	0	289	0	0
Mysore ..	25	9	9	25	9	9	26	13	1	43	14	2	41	2	3	31	5	6	54	13	8	52	1	9	56	3	8	*			*			*			398	2	5	390	12	6	356	0	0
Hassan ..	37	6	5	37	6	5	34	4	7	41	2	3	37	6	5	37	6	5	51	6	10	51	6	10	51	6	10	*			*			*			411	6	10	411	6	10	411	6	10
Shimoga ..	35	8	4	35	8	4	31	4	10	32	8	0	32	8	0	*			49	1	0	49	1	0	45	15	0	32	8	0	*			*			415	1	8	415	1	8	387	7	2
Kadur ...	32	0	0	32	0	0	30	0	0	30	0	0	30	0	0	30	0	0	42	0	0	42	0	0	36	0	0	*			*			*			363	0	0	363	0	0	363	0	0
Chitaldrug	37	6	5	29	6	2	29	6	2	29	6	2	29	6	2	29	6	2	51	6	10	51	6	10	45	11	5	20	9	2	20	9	2	13	11	5	411	6	10	411	6	10	411	6	10

* Article not available.

S'43

Prices Current [Wholesale] of Food Grains, &c., at the Head-Quarters of the several Districts of the Mysore State during the fortnight ending 30th Apl. 1906—*contd.*

ಸನ್ 1906ನೆ ಇಸವಿ ಏಪ್ರಿಲ್ ತಿಂಗಳ 30ನೆ ತಾರೀಖಿಗೆ ಆತ್ಯೈನಾದ ಪಂಧ್ರಾವಾಡಾ ಬಾಬತು ಒಟ್ಟುವಾ ಪಾವದ ದುಕಾನಗಳಲ್ಲಿ ಸುರೋಖ್ತಾದ ಆಹಾರ ಜಿನಸಿ ವಗೈರೆ ನಿರಖುನಾಮಾ ಡಿಸ್ಟ್ರಿಕ್ಟ್ ಹೆಡ್‌ಕ್ವಾರ್ಟರ್‌ಗಳ ಬಾಬತು-ಸೇಷ.

Prices per 10 maunds of 82⅔ lbs. each ಮಣ 1ಕ್ಕೆ 82⅔ ಪೌನುಗಳ ಮೇರಿಗೆ 10 ಮೌಂಕ್ಕೆ ಖರೀದಿ

District ಡಿಸ್ಟ್ರಿಕ್ಟ	Wheat Flour ಗೋಧಿ ಹಿಟ್ಟು 17			Sea Salt ಕಲ್ಲುಪ್ಪು 18			Oil Seeds: Gingelly Sesamum indicum ಎಳ್ಳು 19			Sugar: Goor or jaggory ಬೆಲ್ಲ 20			Fibres: Cotton cleaned Gossypium ಅರಳೆ 21		
	Present fortnight ಸುಜಿಕಕ್ಕೂರಿ ಪಂಧ್ರಾವಾಡಾ	Past fortnight ಗುಜಿಮ್ಲಾ ಪಂಧ್ರಾವಾಡಾ	Corresponding fortnight of last year ಗುಜಿಮ್ಲಾ ಸಾಲ್ ಪೊಕಾಬಿಲಾ ಪಂಧ್ರಾವಾಡಾ	Present fortnight ಸುಜಿಕಕ್ಕೂರಿ ಪಂಧ್ರಾವಾಡಾ	Past fortnight ಗುಜಿಮ್ಲಾ ಪಂಧ್ರಾವಾಡಾ	Corresponding fortnight of last year ಗುಜಿಮ್ಲಾ ಸಾಲ್ ಪೊಕಾಬಿಲಾ ಪಂಧ್ರಾವಾಡಾ	Present fortnight ಸುಜಿಕಕ್ಕೂರಿ ಪಂಧ್ರಾವಾಡಾ	Past fortnight ಗುಜಿಮ್ಲಾ ಪಂಧ್ರಾವಾಡಾ	Corresponding fortnight of last year ಗುಜಿಮ್ಲಾ ಸಾಲ್ ಪೊಕಾಬಿಲಾ ಪಂಧ್ರಾವಾಡಾ	Present fortnight ಸುಜಿಕಕ್ಕೂರಿ ಪಂಧ್ರಾವಾಡಾ	Past fortnight ಗುಜಿಮ್ಲಾ ಪಂಧ್ರಾವಾಡಾ	Corresponding fortnight of last year ಗುಜಿಮ್ಲಾ ಸಾಲ್ ಪೊಕಾಬಿಲಾ ಪಂಧ್ರಾವಾಡಾ	Present fortnight ಸುಜಿಕಕ್ಕೂರಿ ಪಂಧ್ರಾವಾಡಾ	Past fortnight ಗುಜಿಮ್ಲಾ ಪಂಧ್ರಾವಾಡಾ	Corresponding fortnight of last year ಗುಜಿಮ್ಲಾ ಸಾಲ್ ಪೊಕಾಬಿಲಾ ಪಂಧ್ರಾವಾಡಾ
	Rs a p	Rs a p	Rs a p	Rs a p	Rs a p	Rs a p	Rs a p	Rs a p	Rs a p	Rs a p	Rs a p	Rs a p	Rs a p	Rs a p	Rs a p
Bangalore..	56 15 1	56 15 1	48 6 5	26 8 0	26 8 0	29 13 0	72 5 5	72 5 5	58 12 5	49 4 7	49 4 7	64 4 7	205 11 5	205 11 5	205 11 5
Kolar ..	50 0 0	50 0 0	50 0 0	26 0 0	26 0 0	33 0 0	50 0 0	50 0 0	50 0 0	44 0 0	44 0 0	44 0 0	*	*	*
Tumkur ...	*	*	*	28 0 0	28 0 0	33 0 0	53 0 0	53 0 0	*	44 0 0	44 0 0	*	*	*	*
Mysore ...	57 9 6	52 12 9	48 0 0	25 7 6	29 6 2	27 6 1	70 8 5	70 8 5	65 13 3	52 9 1	49 5 11	79 15 11	188 9 11	188 9 11	188 9 1
Hassan ...	68 9 2	68 9 2	68 9 2	29 5 3	34 4 7	34 4 7	68 9 2	68 9 2	45 11 5	51 6 10	68 9 2	85 11 5	171 6 10	171 6 10	171 6 10
Shimoga ...	71 7 4	55 15 5	55 10 10	24 6 10	24 6 10	27 15 6	55 15 5	55 15 5	49 1 0	58 2 0	58 2 0	85 5 10	226 11 6	226 11 6	187 13 10
Kadur ...	64 0 0	64 0 0	64 0 0	27 0 0	27 0 0	31 0 0	50 0 0	50 0 0	36 0 0	72 0 0	72 0 0	72 0 0	303 0 0	303 0 0	303 0 0
Chitaldrug	51 6 10	51 6 10	45 11 5	41 2 3	41 2 3	41 2 3	51 6 10	51 6 10	34 4 7	51 6 10	51 6 10	51 6 10	137 2 3	137 2 3	137 2 3

* Article not available.

544

Prices Current [Wholesale] of Food Grains, &c., at the Head-Quarters of the several Districts of the Mysore State during the fortnight ending 30th Apl. 1906—*contd.*

ಸನ್ 1906ನೆ ಇಸವಿ ಏಪ್ರಿಲ್ ಮಾಸ 30ನೆ ತಾರೀಖಿಗೆ ಆಖೈರಾದ ಪಂಧ್ರಾವಾಡಾ ಬಾಬತು ಒಟ್ಟುವ್ಯಾಪಾರದ ದುಕಾನ್‌ಗಳಲ್ಲಿ ಪ್ರಸಿದ್ಧವಾದ ಆಹಾರದವಸು ವಗೈರೆ ನಿರಖುನಾಮಾ-ಡಿಸ್ಟ್ರಿಕ್ಟ್‌ಹೆಡ್ ಕ್ವಾರ್ಟರ್‌ಗಳ ಬಾಬತು-ಸಂಕ್ಷೇಪ.

Prices per 10 maunds of $82\frac{2}{7}$ lbs. each ಮಣ 1ಕ್ಕೆ $82\frac{2}{7}$ ಪೌನುಗಳ ಮೇರಿಗೆ ಮಣ 10ಕ್ಕೆ ಖರೀದಿ

District ಡಿಸ್ಟ್ರಿಕ್ಟ್	Drugs and Narcotics — Tobacco leaf Nicotiana tabacum and N. rustica ಹೊಗೆಸೊಪ್ಪು 22			Fodder — Grass ಹಸೀ ಹುಲ್ಲು 23			Straw ಒಣ ಹುಲ್ಲು 24			Javar stalks ಜೋಳದ ಕಡ್ಡಿ 25		
	Present fortnight ಸುಜಕ್ಕರೆ ಪಂಧ್ರಾವಾಡಾ	Past fortnight ಗುಜಷ್ಟಾ ಪಂಧ್ರಾವಾಡಾ	Corresponding fortnight of last year ಗುಜಷ್ಟಾ ಸಾಲ್ ಸೊಕಾಬಿಲಾ ಪಂಧ್ರಾವಾಡಾ	Present fortnight ಸುಜಕ್ಕರೆ ಪಂಧ್ರಾವಾಡಾ	Past fortnight ಗುಜಷ್ಟಾ ಪಂಧ್ರಾವಾಡಾ	Corresponding fortnight of last year ಗುಜಷ್ಟಾ ಸಾಲ್ ಸೊಕಾಬಿಲಾ ಪಂಧ್ರಾವಾಡಾ	Present fortnight ಸುಜಕ್ಕರೆ ಪಂಧ್ರಾವಾಡಾ	Past fortnight ಗುಜಷ್ಟಾ ಪಂಧ್ರಾವಾಡಾ	Corresponding fortnight of last year ಗುಜಷ್ಟಾ ಸಾಲ್ ಸೊಕಾಬಿಲಾ ಪಂಧ್ರಾವಾಡಾ	Present fortnight ಸುಜಕ್ಕರೆ ಪಂಧ್ರಾವಾಡಾ	Past fortnight ಗುಜಷ್ಟಾ ಪಂಧ್ರಾವಾಡಾ	Corresponding fortnight of last year ಗುಜಷ್ಟಾ ಸಾಲ್ ಸೊಕಾಬಿಲಾ ಪಂಧ್ರಾವಾಡಾ
	Rs a p	Rs a p	Rs a p	Rs a p	Rs a p	Rs a p	Rs a p	Rs a p	Rs a p	Rs a p	Rs a p	Rs a p
Bangalore	291 6 10	291 6 10	308 9 2	9 2 3	9 2 3	7 9 10	8 9 1	8 9 1	6 13 9	*	*	*
Kolar	No wholesale transactions			5 0 0	5 0 0	5 0 0	8 0 0	8 0 0	8 0 0	*	*	*
Tumkur	*	*	*	*	*	*	*	*	*	*	*	*
†Mysore	280 3 3	280 3 3	280 8 3	11 6 4	11 6 4	11 6 10	6 8 2	6 8 2	6 8 2	6 8 0	6 0 0	6 12 0
Hassan	171 6 10	171 6 10	171 6 10	1 11 5	1 11 5	1 11 5	3 6 10	3 6 10	3 6 10	*	*	*
Shimoga	173 0 4	173 0 4	173 0 4	*	*	*	3 10 4	3 10 4	1 13 2	*	*	*
Kadur	303 0 0	303 0 0	303 0 0	*	*	*	22 0 0	22 0 0	22 0 0	*	*	*
Chitaldrug	137 2 3	137 2 3	137 2 3	*	*	*	13 11 5	13 11 5	13 11 5	13 11 5	13 11 5	10 4 7

* Article not available. † Column 25 owing to the failure of rains and the short supply to the market price gone up.

Prices Current [Wholesale] of Food Grains, &c., at the Head-Quarters of the several Districts of the Mysore State during the fortnight onding 30th Apl. 1906—*contd.*

ಸನ್ 1906ನೆ ಇಸವಿ ಏಪ್ರಿಲ್ ಮಾಹೆ 30ನೆ ತಾರೀಖಿಗೆ ಆಖೈರಾದ ಪಂಧ್ರಾವಾಡಾ ಬಾಬತು ಬಟ್ಟುವ್ಯಾಪಾರದ ದುಕಾನಗಳಲ್ಲಿ ಫುರೋಖ್ತಾದ ಆಹಾರಜಿನಸಿ ವಗೈರೆ ನಿರಖುನಾಮಾ-ಡಿಸ್ಟ್ರಿಕ್ಟ್‌ಹೆಡ್‌ಕ್ವಾರ್ಟರ್‌ಗಳ ಬಾಬತು-ಸರೇಷ.

District ಡಿಸ್ಟ್ರಿಕ್ಟ	Prices per 10 maunds of 82 2/7 lbs. each ಮಣ 1ಕ್ಕೆ 82 2/7 ಪೌನುಗಳ ಮೇರಿಗೆ 10 ಮಣಕ್ಕೆ ಖರೀದಿ																	
	Garden produce																	
	Turmeric Curcuma longa ಅರಶಿನ			Coffee Coffea arabica ಕಾಫಿ			Cardamom Amomum aromaticum ಯಾಲಕ್ಕಿ			Supari Areca catechu ಅಡಿಕೆ		
	26			27			28			29		
	Present fortnight ಸುಜಕ್ಕರೆ ಪಂಧ್ರಾವಾಡಾ	Past fortnight ಗುಜಷ್ಟಾ ಪಂಧ್ರಾವಾಡಾ	Corresponding fortnight of last year ಗುಜಷ್ಟಾ ಸಾಲ್ ಸೈಕಾಬಿಲಾ ಪಂಧ್ರಾವಾಡಾ	Present fortnight ಸುಜಕ್ಕರೆ ಪಂಧ್ರಾವಾಡಾ	Past fortnight ಗುಜಷ್ಟಾ ಪಂಧ್ರಾವಾಡಾ	Corresponding fortnight of last year ಗುಜಷ್ಟಾ ಸಾಲ್ ಸೈಕಾಬಿಲಾ ಪಂಧ್ರಾವಾಡಾ	Present fortnight ಸುಜಕ್ಕರೆ ಪಂಧ್ರಾವಾಡಾ	Past fortnight ಗುಜಷ್ಟಾ ಪಂಧ್ರಾವಾಡಾ	Corresponding fortnight of last year ಗುಜಷ್ಟಾ ಸಾಲ್ ಸೈಕಾಬಿಲಾ ಪಂಧ್ರಾವಾಡಾ	Present fortnight ಸುಜಕ್ಕರೆ ಪಂಧ್ರಾವಾಡಾ	Past fortnight ಗುಜಷ್ಟಾ ಪಂಧ್ರಾವಾಡಾ	Corresponding fortnight of last year ಗುಜಷ್ಟಾ ಸಾಲ್ ಸೈಕಾಬಿಲಾ ಪಂಧ್ರಾವಾಡಾ
	Rs a p	Rs a p	Rs a p	Rs a p	Rs a p	Rs a p	Rs a p	Rs a p	Rs a p	Rs a p	Rs a p	Rs a p
Bangalore	111 6 10	111 6 10	53 9 1	342 13 8	342 13 8	342 13 8	1,371 6 10	1,371 6 10	1,711 6 10	308 9 2	291 6 10	282 13 9
Kolar ..	100 0 0	100 0 0	100 0 0	400 0 0	400 0 0	400 0 0	1,600 0 0	1,600 0 0	1,600 0 0	400 0 0	400 0 0	400 0 0
Tumkur ...	*	*	*	*	*	*	*	*	*	*	*	*
Mysore ...	109 1 5	109 1 5	81 13 1	286 14 0	286 14 0	312 5 6	1,690 8 4	1,690 8 4	1,690 8 4	308 9 2	308 9 2	342 13 8
Hassan ...	102 13 9	102 13 9	68 9 2	274 4 7	308 9 2	274 4 7	1,028 9 1	1,028 9 1	857 2 3	171 6 10	205 11 5	171 6 10
Shimoga ...	136 15 8	136 15 8	85 5 10	250 12 6	250 12 6	273 15 4	1,095 15 10	1,095 15 10	939 6 10	273 15 4	273 15 4	346 4 0
Kadur ...	151 0 0	151 0 0	151 0 0	363 0 0	363 0 0	363 0 0	2,100 0 0	2,100 0 0	2,424 0 0	363 0 0	363 0 0	363 0 0
Chitaldrug	137 2 3	137 2 3	137 2 3	411 6 10	411 6 10	411 6 10	3,291 6 10	3,291 6 10	3,291 6 10	205 11 5	205 11 5	205 11 5

* Article not available.

5'46

Prices Current [Wholesale] of Food Grains, &c., at the Head-Quarters of the several Districts of the Mysore State during the fortnight ending 30th April 1906—*concld.*

ಸನ್-1906ನೆ ಇಸವಿ ಏಪ್ರಿಲ್ ಮಾಹೆ 30ನೆ ತಾರೀಖಿಗೆ ಆಖೈರಾದ ಪಂಧ್ರಾವಾಡಾ ಬಾಬತು ಒಟ್ಟು ವ್ಯಾಪಾರದ ದುಕಾನಗಳಲ್ಲಿ ಪ್ರಚಲಿತ ಆದ ಆಹಾರಜಿನಸಿ ವಗೈರೆ ನಿರಖುನಾಮಾ-ಡಿಸ್ಟ್ರಿಕ್ಟ್‌ಹೆಡ್ ಕ್ವಾರ್ಟರ್‌ಗಳ ಬಾಬತುಸಮಾಪ್ತಿ.

District ಡಿಸ್ಟ್ರಿಕ್ಟ್	Prices per 10 maunds of 82 2/7 lbs. each ಮಣ 1ಕ್ಕೆ 82 2/7 ಪೌನುಗಳ ಮೇರಿಗೆ 10 ಮಣಕ್ಕೆ ಖರೀದಿ																				
	Garden produce						Hides (cattle) ದನವಿನ ಚರ್ಮ						Plough bullocks (pair) ಉಳೋವತ್ತುಗಳು ಜೊತೆ 1ಕ್ಕೆ			Sheep (score) ಕುರಿಗಳು 20ಕ್ಕೆ					
	Dry cocoanut cocos nucifera ಬೊಬರಿ																				
	30						31						32			33					
	Present fortnight ಸಮಕಾಲೀನ ಪಂಧ್ರಾವಾಡಾ			Past fortnight ಗುಜಷ್ಟಾ ಪಂಧ್ರಾವಾಡಾ			Corresponding fortnight of last year ಗುಜಷ್ಟಾ ಸಾಲ್ ನೊಕಾಬಿಲಾ ಪಂಧ್ರಾವಾಡಾ			Present fortnight ಸಮಕಾಲೀನ ಪಂಧ್ರಾವಾಡಾ			Past fortnight ಗುಜಷ್ಟಾ ಪಂಧ್ರಾವಾಡಾ			Corresponding fortnight of last year ಗುಜಷ್ಟಾ ಸಾಲ್ ನೊಕಾಬಿಲಾ ಪಂಧ್ರಾವಾಡಾ			Present fortnight ಸಮಕಾಲೀನ ಪಂಧ್ರಾವಾಡಾ			Past fortnight ಗುಜಷ್ಟಾ ಪಂಧ್ರಾವಾಡಾ			Corresponding fortnight of last year ಗುಜಷ್ಟಾ ಸಾಲ್ ನೊಕಾಬಿಲಾ ಪಂಧ್ರಾವಾಡಾ		
	Rs	a	p	Rs	a	p	Rs	a	p	Rs	a	p	Rs	a	p	Rs	a	p	Rs	a	p
Bangalore ..	154	4	7	154	4	7	120	0	0	437	2	3	437	2	3	437	2	3	120 to 150		
Kolar ...	133	0	0	133	0	0	133	0	0	190	0	0	190	0	0	190	0	0	100	0	0
Tumkur ..	*			*			*			*			*			*			*		
Mysore ...	108	9	1	103	9	1	126	10	8	514	4	6	514	4	6	514	4	6	70	0	0
Hassan ...	164	9	2	164	9	2	164	9	2	164	9	2	164	9	2	164	9	2	20	0	0
Shimoga ...	136	15	8	136	15	8	136	15	8	273	15	4	273	15	4	273	15	4	60	0	0
Kadur ...	193	0	0	193	0	0	193	0	0	2 per hide.	0	0	2 per hide.	0	0	2 per hide.	0	0	40	0	0
Chitaldrug	†137	2	3	137	2	3	137	2	3	137	2	3	137	2	3	137	2	3	from 20 to 80 Rs.		

District ಡಿಸ್ಟ್ರಿಕ್ಟ್	Plough bullocks (pair) ಉಳೋವತ್ತುಗಳು ಜೊತೆ 1ಕ್ಕೆ			Sheep (score) ಕುರಿಗಳು 20ಕ್ಕೆ		
	32			33		
	Present fortnight ಸಮಕಾಲೀನ ಪಂಧ್ರಾವಾಡಾ	Past fortnight ಗುಜಷ್ಟಾ ಪಂಧ್ರಾವಾಡಾ	Corresponding fortnight of last year ಗುಜಷ್ಟಾ ಸಾಲ್ ನೊಕಾಬಿಲಾ ಪಂಧ್ರಾವಾಡಾ	Present fortnight ಸಮಕಾಲೀನ ಪಂಧ್ರಾವಾಡಾ	Past fortnight ಗುಜಷ್ಟಾ ಪಂಧ್ರಾವಾಡಾ	Corresponding fortnight of last year ಗುಜಷ್ಟಾ ಸಾಲ್ ನೊಕಾಬಿಲಾ ಪಂಧ್ರಾವಾಡಾ
	Rs a p	Rs a p	Rs a p	Rs a p	Rs a p	Rs a p
Bangalore ..	120 to 150	120 to 150	120 to 150	160 0 0	160 0 0	160 0 0
Kolar ...	100 0 0	100 0 0	100 0 0	100 0 0	100 0 0	100 0 0
Tumkur ..	*	*	*	*	*	*
Mysore ...	70 0 0	70 0 0	70 0 0	100 0 0	100 0 0	100 0 0
Hassan ...	30 0 0	30 0 0	30 0 0	80 0 0	100 0 0	100 0 0
Shimoga ...	60 0 0	60 0 0	50 0 0	60 0 0	40 0 0	60 0 0
Kadur ...	40 0 0	40 0 0	40 0 0	60 0 0	60 0 0	60 0 0
Chitaldrug	from 20 to 80 Rs.	from 20 to 80 Rs.	from 20 to 80 Rs	from 80 to 120 Rs. Per	from 80 to 120 Rs. score	from 80 to 120 Rs.

*Articles not available.

† The prices of horsegram have risen owing to its export to other parts and want of rain.

Prices Current [Retail] of Food Grains, &c., at the Head-Quarters of the several Districts of the Mysore State during the fortnight ending 30th April 1906

ಸನ್ 1906ನೆ ಇಸವಿ ಏಪ್ರಿಲ್ ಮಾಹೆ 30ನೆ ತಾರೀಖಿಗೆ ಆಖೈರಾದ ಪಂಧ್ರಾವಾಡಾ ಬಾಬತು ಒಟ್ಟುವ್ಯಾಪಾರದ ಜಿಲ್ಲರೆ ಅಂಗಡಿಗಳಲ್ಲಿ ಪುರೋಖ್ತ್ ಆದ ಆಹಾರ ಜಿನಸಿ ವಗೈರೆನಿರಖುನಾಮಾಡಿಸ್ಟ್ರಿಕ್ಟ್ ಹೆಡ್ ಕ್ವಾರ್ಟರ್‌ಗಳ ಬಾಬತು.

Quantity per rupee by the standard seer of 80 tolas, *vide* Government of India No. 1—21, dated 10th February 1874

ಸನ್ 1874ನೆ ಇಸವಿ ಫೆಬ್ರುವರಿ 10ನೆ ಮರಕೂಂ 1—21ನೆ ನಂಬುರು ಇಂಡಿಯಾ ಗವರ್ನಮೆಂಟ್ ಆರ್ಡರ್ ಅನುಸರಿಸಿ ರೂಪಾಯಿ ಒಕ್ಕೆ ೮೦ ತೊಲಾ ತೂಕದ ಬಾಬತು ಶೇರುಗಳು

District ಡಿಸ್ಟ್ರಿಕ್ಟ್	Grains and Pulses ಧಾನ್ಯ ಮತ್ತು ಕಾಳುಗಳು																													
	Rice unhusked (paddy) Oryza sativa ಭತ್ತ						Rice, best sort ಅವಲ್ ತರಹೆ ಅಕ್ಕಿ						Rice, common ಸಾಧಾರಣ ಅಕ್ಕಿ						Wheat Triticum sativum ಹೊಟ್ಟೆ ಗೋಧಿ						Barley Hordeum vulgare ಜವೆ ಗೋಧಿ					
	2						3						4						5						6					
	Present fortnight ಸುಜಕ್ಕರ್ ಪಂಧ್ರಾವಾಡಾ		Past fortnight ಗುಜಷ್ತಾ ಪಂಧ್ರಾವಾಡಾ		Corresponding fortnight of last year ಗುಜಷ್ತಾ ಸಾಲ್ ಸೊಕಾಬಿಲಾ ಪಂಧ್ರಾವಾಡಾ		Present fortnight ಸುಜಕ್ಕರ್ ಪಂಧ್ರಾವಾಡಾ		Past fortnight ಗುಜಷ್ತಾ ಪಂಧ್ರಾವಾಡಾ		Corresponding fortnight of last year ಗುಜಷ್ತಾ ಸಾಲ್ ಸೊಕಾಬಿಲಾ ಪಂಧ್ರಾವಾಡಾ		Present fortnight ಸುಜಕ್ಕರ್ ಪಂಧ್ರಾವಾಡಾ		Past fortnight ಗುಜಷ್ತಾ ಪಂಧ್ರಾವಾಡಾ		Corresponding fortnight of last year ಗುಜಷ್ತಾ ಸಾಲ್ ಸೊಕಾಬಿಲಾ ಪಂಧ್ರಾವಾಡಾ		Present fortnight ಸುಜಕ್ಕರ್ ಪಂಧ್ರಾವಾಡಾ		Past fortnight ಗುಜಷ್ತಾ ಪಂಧ್ರಾವಾಡಾ		Corresponding fortnight of last year ಗುಜಷ್ತಾ ಸಾಲ್ ಸೊಕಾಬಿಲಾ ಪಂಧ್ರಾವಾಡಾ		Present fortnight ಸುಜಕ್ಕರ್ ಪಂಧ್ರಾವಾಡಾ		Past fortnight ಗುಜಷ್ತಾ ಪಂಧ್ರಾವಾಡಾ		Corresponding fortnight of last year ಗುಜಷ್ತಾ ಸಾಲ್ ಸೊಕಾಬಿಲಾ ಪಂಧ್ರಾವಾಡಾ	
	Srs	ch	Srs	ch	Srs	ch	Srs	ch	Srs	ch	Srs	ch	Srs	ch	Srs	ch	Srs	ch	Srs	ch	Srs	ch	Srs	ch	Srs	ch	Srs	ch	Srs	ch
Bangalore ...	16	10	16	10	25	6	6	14	7	12	8	10	7	12	8	10	10	6	10	4	10	9	12	5	*	*	*	*	*	*
Kolar ..	18	0	18	0	20	0	7	0	7	0	8	0	7	8	7	8	9	0	8	0	8	0	10	0	8	0	8	0	10	0
Tumkur ...	18	0	18	0	21	0	6	8	6	8	8	8	8	0	8	0	9	0	7	0	7	0	10	0	7	0	7	0	10	0
Mysore ..	16	12	16	12	17	0	7	0	7	0	9	2	8	0	8	4	10	11	6	4	6	4	10	8	6	4	*	*	*	*
Hassan ..	18	4	20	0	20	0	7	8	7	8	9	0	8	0	8	0	10	0	7	7	8	0	10	0	7	8	8	0	10	0
Shimoga .	18	14	21	0	25	3	6	5	7	6	8	6	7	6	8	6	11	9	7	6	7	6	11	9	*	*	*	*	*	*
Kadur ..	24	0	24	0	25	0	7	0	7	0	8	0	8	0	8	0	10	0	8	0	8	0	10	0	11	0	11	0	11	0
Chitaldrug ...	16	0	16	0	24	0	7	0	7	0	9	0	8	0	8	0	10	0	8	0	8	0	12	0	8	0	8	0	12	0

* Article not available.

Prices Current [Retail] of Food Grains, &c., at the Head-Quarters of the several Districts of the Mysore State during the fortnight ending 30th Apl. 1906—*contd.*

ಸನ್ 1906ನೆ ಇಸವಿ ಏಪ್ರಿಲ್ ತಿಂಗಳ 30ನೆ ತಾರೀಖಿಗೆ ಆಯ್ದಿರುವ ಪುಧ್ಯಾನಾಡಾ ಬಾಬತು ಚಿಲ್ಲರೆ ಅಂಗಡಿಗಳಲ್ಲಿ ಪುರೋಬ್ಬ್ ಆದ ಆಹಾರ ಜಿನಸಿ ವಗೈರೆ ನಿರಖುನಾಮಾ – ಡಿಸ್ಟ್ರಿಕ್ಟ್ ಹೆಡ್ ಕ್ವಾರ್ಟರ್‌ಗಳ ಬಾಬತು-ಸಶೇಷ.

Quantity per rupee by the standard seer of 80 tolas, &c.—*continued.* ರೂ. 1ಕ್ಕೆ 80 ತೊಲಾ ತೂಕದ ಬಾಬತು ಶೇರುಗಳು—ಸಶೇಷ.

Grains and Pulses ಧಾನ್ಯ ಮತ್ತು ಕಾಳುಗಳು

District ಡಿಸ್ಟ್ರಿಕ್ಟ	Cholam or javar Sorghum vulgare ಜೋಳ 7						Kambu or Bajra Pennisetum typhoideum ಸಜ್ಜೆ 8						Ragi Eleusine coracana ರಾಗಿ 9					
	Present fortnight ಪುಜಕ್ಕೂರ್ ಪಂಧ್ಯಾನಾಡಾ		Past fortnight ಗುಜಷ್ಟಾ ಪಂಧ್ಯಾನಾಡಾ		Corresponding fortnight of last year ಗುಜಷ್ಟಾ ಸಾಲ್ ಪೊಕಾಬಿಲಾ ಪಂಧ್ಯಾನಾಡಾ		Present fortnight ಪುಜಕ್ಕೂರ್ ಪಂಧ್ಯಾನಾಡಾ		Past fortnight ಗುಜಷ್ಟಾ ಪಂಧ್ಯಾನಾಡಾ		Corresponding fortnight of last year ಗುಜಷ್ಟಾ ಸಾಲ್ ಪೊಕಾಬಿಲಾ ಪಂಧ್ಯಾನಾಡಾ		Present fortnight ಪುಜಕ್ಕೂರ್ ಪಂಧ್ಯಾನಾಡಾ		Past fortnight ಗುಜಷ್ಟಾ ಪಂಧ್ಯಾನಾಡಾ		Corresponding fortnight of last year ಗುಜಷ್ಟಾ ಸಾಲ್ ಪೊಕಾಬಿಲಾ ಪಂಧ್ಯಾನಾಡಾ	
	Srs	ch	Srs	ch	Srs	ch	Srs	ch	Srs	ch	Srs	ch	Srs	ch	Srs	ch	Srs	ch
Bangalore	*	*	*	*	*	*	*	*	*	*	*	*	17	8	18	8	18	0
Kolar ...	*	*	*	*	*	*	*	*	*	*	*	*	15	0	15	0	20	0
Tumkur ...	16	0	16	0	21	0	*	*	*	*	*	*	18	0	18	0	20	0
Mysore ...	12	8	13	0	22	8	*	*	*	*	*	*	15	0	15	0	18	0
Hassan ...	*	*	*	*	*	*	*	*	*	*	*	*	16	0	16	0	20	0
Shimoga ...	12	10	14	11	23	2	*	*	*	*	*	*	14	11	16	13	23	2
Kadur ...	17	0	17	0	23	0	*	*	*	*	*	*	16	0	16	0	19	0
Chitaldrug	13	0	13	0	24	0	16	0	16	0	24	0	15	0	15	0	24	0

District ಡಿಸ್ಟ್ರಿಕ್ಟ	Maize Zeamays ಮುಸಕಿನ ಜೋಳ 10						Bengal gram Cicer arietinum ಕಡಲೆ 11					
	Present fortnight ಪುಜಕ್ಕೂರ್ ಪಂಧ್ಯಾನಾಡಾ		Past fortnight ಗುಜಷ್ಟಾ ಪಂಧ್ಯಾನಾಡಾ		Corresponding fortnight of last year ಗುಜಷ್ಟಾ ಸಾಲ್ ಪೊಕಾಬಿಲಾ ಪಂಧ್ಯಾನಾಡಾ		Present fortnight ಪುಜಕ್ಕೂರ್ ಪಂಧ್ಯಾನಾಡಾ		Past fortnight ಗುಜಷ್ಟಾ ಪಂಧ್ಯಾನಾಡಾ		Corresponding fortnight of last year ಗುಜಷ್ಟಾ ಸಾಲ್ ಪೊಕಾಬಿಲಾ ಪಂಧ್ಯಾನಾಡಾ	
	Srs	ch	Srs	ch	Srs	ch	Srs	ch	Srs	ch	Srs	ch
Bangalore	3 maizes for pies.	4	3 maizes for pies.	4	3 maizes for pies.	4	8	0	8	6	12	1
Kolar ...	*	*	*	*	*	*	9	0	9	0	10	0
Tumkur ...	*	*	*	*	*	*	9	0	9	0	10	0
Mysore ...	*	*	*	*	*	*	9	8	9	0	12	1
Hassan ...	*	*	*	*	*	*	8	0	8	0	11	0
Shimoga ...	*	*	*	*	*	*	7	6	7	6	12	1
Kadur ...	*	*	*	*	*	*	8	0	8	0	11	0
Chitaldrug	*	*	*	*	*	*	8	0	8	0	12	0

* Article not available.

Prices Current [Retail] of Food Grains, &c., at the Head-Quarters of the several Districts of the Mysore State during the fortnight ending 30th April 1906.—*contd.*
ಸನ 1906ನೆ ಇಸವಿ ಏಪ್ರಿಲ್ ತಿಂಗಳ 30ನೆ ತಾರೀಖಿಗೆ ಆಖೈರಾದ ಪಂಧ್ರಾವಾಡಾ ಬಾಬತು ಜಿಲ್ಲೆರೆ ಅಂಗಡಿಗಳಲ್ಲಿ ಸರೋಖ್ತ್ ಆದ ಆಹಾರ ಜಿನಸಿ ವಗೈರೆ ನಿರಖುನಾಮಾ — ಡಿಸ್ಟ್ರಿಕ್ಟ್ ಹೆಡ್ ಕ್ವಾರ್ಟರ್‌ಗಳ ಬಾಬತು — ಸಂಕ್ಷೇಪ.

Quantity per rupee by the standard seer of 80 tolas, &c.—*continued.* ರೂ. 1ಕ್ಕೆ 80 ತೊಲಾ ತೂಕದ ಬಾಬತು ಕೇರುಗಳು — ಸಂಕ್ಷೇಪ.

District ಡಿಸ್ಟ್ರಿಕ್ಟ್	Grains and Pulses ಧಾನ್ಯ ಮತ್ತು ಕಾಳುಗಳು																								Ghee (Clarified butter) ತುಪ್ಪ					
	Horse gram Dolichos biflorus ಹುರಳಿ						Arhar Cajanus indicus ತೊಗರಿ						Arhar Dal ತೊಗರಿ ಬ್ಯಾಳೆ						Kangani Setaria italica ನವಣೆ											
	12						13						14						15						16					
	Present fortnight ಪ್ರಸಕ್ತದ ಪಂಧ್ರಾವಾಡಾ		Past fortnight ಗುಜಿಷ್ತಾ ಪಂಧ್ರಾವಾಡಾ		Corresponding fortnight of last year ಗುಜಿಷ್ತಾ ಸಾಲ್ ಸೊಕಾಬಿಲಾ ಪಂಧ್ರಾವಾಡಾ		Present fortnight ಪ್ರಸಕ್ತದ ಪಂಧ್ರಾವಾಡಾ		Past fortnight ಗುಜಿಷ್ತಾ ಪಂಧ್ರಾವಾಡಾ		Corresponding fortnight of last year ಗುಜಿಷ್ತಾ ಸಾಲ್ ಸೊಕಾಬಿಲಾ ಪಂಧ್ರಾವಾಡಾ		Present fortnight ಪ್ರಸಕ್ತದ ಪಂಧ್ರಾವಾಡಾ		Past fortnight ಗುಜಿಷ್ತಾ ಪಂಧ್ರಾವಾಡಾ		Corresponding fortnight of last year ಗುಜಿಷ್ತಾ ಸಾಲ್ ಸೊಕಾಬಿಲಾ ಪಂಧ್ರಾವಾಡಾ		Present fortnight ಪ್ರಸಕ್ತದ ಪಂಧ್ರಾವಾಡಾ		Past fortnight ಗುಜಿಷ್ತಾ ಪಂಧ್ರಾವಾಡಾ		Corresponding fortnight of last year ಗುಜಿಷ್ತಾ ಸಾಲ್ ಸೊಕಾಬಿಲಾ ಪಂಧ್ರಾವಾಡಾ		Present fortnight ಪ್ರಸಕ್ತದ ಪಂಧ್ರಾವಾಡಾ		Past fortnight ಗುಜಿಷ್ತಾ ಪಂಧ್ರಾವಾಡಾ		Corresponding fortnight of last year ಗುಜಿಷ್ತಾ ಸಾಲ್ ಸೊಕಾಬಿಲಾ ಪಂಧ್ರಾವಾಡಾ	
	Srs	ch	Srs	ch	Srs	ch	Srs	ch	Srs	ch	Srs	ch	Srs	ch	Srs	ch	Srs	ch	Srs	ch	Srs	ch	Srs	ch	Srs	ch	Srs	ch	Srs	ch
Bangalore	15	0	15	10	15	10	15	12	15	12	12	15	8	8	8	8	8	8	*	*	*	*	*	*	0	15	0	15	1	2
Kolar ..	14	0	14	0	15	0	*	*	*	*	*	*	9	0	9	0	8	0	*	*	*	*	*	*	1	0	1	0	1	0
Tumkur ...	14	0	14	0	14	0	12	0	12	0	13	0	8	0	8	0	8	0	*	*	*	*	*	*	1	0	1	0	1	0
Mysore ...	12	8	13	0	15	5	12	4	13	0	13	2	10	0	10	8	7	5	*	*	*	*	*	*	3	4	3	4	1	3
Hassan ...	11	0	11	0	12	0	10	0	11	0	11	0	8	0	8	0	8	0	*	*	*	*	*	*	1	0	1	0	1	0
Shimoga ..	11	9	11	9	13	2	12	10	12	10	*	*	8	6	8	6	8	15	12	10	*	*	*	*	0	15	0	15	1	1
Kadur ...	11	0	11	0	12	0	12	0	12	0	12	0	9	0	9	0	8	0	*	*	*	*	*	*	1	3	1	3	1	3
Chitaldrug	11	0	11	0	14	0	14	0	14	0	14	0	8	0	8	0	9	0	20	0	20	0	20	0	1	0	1	0	1	0

*Article not available.

Prices Current [Retail] of Food Grains, &c., at the Head-Quarters of the several Districts of the Mysore State during the fortnight ending 30th April 1906—*contd.*

ಸನ 1906ನೆ ಇಸವಿ ಏಪ್ರಿಲ್ ಮಾಹೇ 30ನೆ ತಾರೀಖಿಗೆ ಅಬ್ಬೆರಾದ ಪಂಧ್ರಾವಾಡಾ ಬಾಬತು ಜಿಲ್ಲೆರೆ ಅಂಗಡಿಗಳಲ್ಲಿ ಪ್ರಚಲಿತ್ ಆದ ಆಹಾರಜಿನಸಿ ವಗೈರೆ ನಿರಖುನಾಮಾ— ಡಿಸ್ಟ್ರಿಕ್ಟ್ ಹೆಡ್ ಕ್ವಾರ್ಟರ್‌ಗಳ ಬಾಬತು—ಸಶೇಷ.

Quantity per rupee by the standard seer of 80 tolas, &c.—*continued.* ರೂ. 1ಕ್ಕೆ 80 ತೊಲಾ ತೂಕದ ಬಾಬತು ಶೇರುಗಳು—ಸಶೇಷ.

District ಡಿಸ್ಟ್ರಿಕ್ಟು	Wheat Flour ಗೋಧಿ ಹಿಟ್ಟು 17						Sea Salt ಕಲ್ಲುಪ್ಪು 18						Oil Seeds Gingelly Sesamum indicum ಎಳ್ಳು 19						Sugar Goor or jaggory ಬೆಲ್ಲ 20						Fibres Cotton cleaned Gossypium ಅರಳೆ 21					
	Present fortnight ಪ್ರಚಲಿತ್ ಪಂಧ್ರಾವಾಡಾ		Past fortnight ಗತಿಸಿದ್ದ ಪಂಧ್ರಾವಾಡಾ		Corresponding fortnight of last year ಗತಿಸಿದ್ದ ಸಾಲ್ ನೆಕಾಬಿಲಿ ಪಂಧ್ರಾವಾಡಾ		Present fortnight ಪ್ರಚಲಿತ್ ಪಂಧ್ರಾವಾಡಾ		Past fortnight ಗತಿಸಿದ್ದ ಪಂಧ್ರಾವಾಡಾ		Corresponding fortnight of last year ಗತಿಸಿದ್ದ ಸಾಲ್ ನೆಕಾಬಿಲಿ ಪಂಧ್ರಾವಾಡಾ		Present fortnight ಪ್ರಚಲಿತ್ ಪಂಧ್ರಾವಾಡಾ		Past fortnight ಗತಿಸಿದ್ದ ಪಂಧ್ರಾವಾಡಾ		Corresponding fortnight of last year ಗತಿಸಿದ್ದ ಸಾಲ್ ನೆಕಾಬಿಲಿ ಪಂಧ್ರಾವಾಡಾ		Present fortnight ಪ್ರಚಲಿತ್ ಪಂಧ್ರಾವಾಡಾ		Past fortnight ಗತಿಸಿದ್ದ ಪಂಧ್ರಾವಾಡಾ		Corresponding fortnight of last year ಗತಿಸಿದ್ದ ಸಾಲ್ ನೆಕಾಬಿಲಿ ಪಂಧ್ರಾವಾಡಾ		Present fortnight ಪ್ರಚಲಿತ್ ಪಂಧ್ರಾವಾಡಾ		Past fortnight ಗತಿಸಿದ್ದ ಪಂಧ್ರಾವಾಡಾ		Corresponding fortnight of last year ಗತಿಸಿದ್ದ ಸಾಲ್ ನೆಕಾಬಿಲಿ ಪಂಧ್ರಾವಾಡಾ	
	Srs	ch	Srs	ch	Srs	ch	Srs	ch	Srs	ch	Srs	ch	Srs	ch	Srs	ch	Srs	ch	Srs	ch	Srs	ch	Srs	ch	Srs	ch	Srs	ch	Srs	ch
Bangalore	6	12	6	12	8	1	14	15	14	15	12	10	5	4	5	4	6	9	8	0	8	0	6	0	1	14	1	14	1	14
Kolar ..	8	0	8	0	8	0	15	0	15	0	12	0	8	0	8	0	8	0	9	0	9	0	9	0	*	*	*	*	*	*
Tumkur ..	7	0	7	0	8	0	13	0	13	0	12	0	8	0	8	0	8	0	4	0	4	0	4	0	2	0	2	0	2	0
Mysore ..	8	0	9	0	7	4	15	0	13	0	14	11	6	4	6	4	6	2	7	8	†21	0	5	4	7	8	7	8	2	4
Hassan ..	6	0	6	0	6	0	14	0	12	0	12	0	6	0	6	0	9	0	8	0	6	0	5	0	2	6	2	6	2	6
Shimoga ..	5	12	7	6	7	6	16	13	16	13	14	11	7	6	7	6	8	6	7	3	7	3	4	13	1	13	1	13	2	3
Kadur ..	6	0	6	0	6	0	14	0	14	0	12	0	8	0	8	0	10	0	5	4	6	4	5	4	1	5	1	5	1	5
Chitaldrug	8	0	8	0	9	0	10	0	10	0	10	0	8	0	8	0	12	0	8	0	8	0	8	0	3	0	3	0	3	0

* Article not available. † Apparently wrong. Deputy Commissioner's explanation called for.

Prices Current [Retail] of Food Grains, &c., at the Head-Quarters of the several Districts of the Mysore State during the fortnight ending 30th April 1906 - *contd.*

ಸನ 1906ನೆ ಇಸವಿ ಏಪ್ರಿಲ್ ಮಾಸ 30ನೆ ತಾರೀಖಿಗೆ ಆಯ್ಕೆರುವ ಪಂಧ್ರವಾಡಾ ಬಾಬತು ಜಿಲ್ಲೆರ ಅಂಗಡಿಗಳಲ್ಲಿ ಪುರೋಖ್ತ ಆದ ಆಹಾರ ಜಿನಸು ವಗೈರೆ ನಿರಖುನಾಮಾ — ಡಿಸ್ಟ್ರಿಕ್ಟ ಹೆಡ್ ಕ್ವಾರ್ಟರಿಗಳ ಬಾಬತು ಸಕೀಪ.

Quantity per rupee by the standard seer of 80 tolas, &c.—*continued.* ರೂ. 1ಕ್ಕೆ 80 ತೋಲಾ ತೂಕದ ಬಾಬತು ಶೇರುಗಳು — ಸಕೀಪ.

District ಡಿಸ್ಟ್ರಿಕ್ಟ	Drugs and Narcotics						Fodder																		Garden produce											
	Tobacco leaf Nicotiana tabacum and N. rustica ಹೊಗೆಸೊಪ್ಪು						Grass ಹಸೀ ಹುಲ್ಲು						Straw ಮಣಹುಲ್ಲು						Javar stalks ಜೋಳದ ಕಡ್ಡಿ						Turmeric Curcuma longa ಅರಿಶಿನ						Coffee Coffea arabica ಕಾಫಿ					
	22						23						24						25						26						27					
	Present fortnight ಸುಜಕರ್ಕರ್ ಪಂಧ್ರವಾಡಾ		Past fortnight ಗುಜಷ್ಟಾ ಪಂಧ್ರವಾಡಾ		Corresponding fortnight of last year ಗುಜಷ್ಟಾ ಸಾಲ್ ಸೊಕಾಬಿಲಾ ಪಂಧ್ರವಾಡಾ		Present fortnight ಸುಜಕರ್ಕರ್ ಪಂಧ್ರವಾಡಾ		Past fortnight ಗುಜಷ್ಟಾ ಪಂಧ್ರವಾಡಾ		Corresponding fortnight of last year ಗುಜಷ್ಟಾ ಸಾಲ್ ಸೊಕಾಬಿಲಾ ಪಂಧ್ರವಾಡಾ		Present fortnight ಸುಜಕರ್ಕರ್ ಪಂಧ್ರವಾಡಾ		Past fortnight ಗುಜಷ್ಟಾ ಪಂಧ್ರವಾಡಾ		Corresponding fortnight of last year ಗುಜಷ್ಟಾ ಸಾಲ್ ಸೊಕಾಬಿಲಾ ಪಂಧ್ರವಾಡಾ		Present fortnight ಸುಜಕರ್ಕರ್ ಪಂಧ್ರವಾಡಾ		Past fortnight ಗುಜಷ್ಟಾ ಪಂಧ್ರವಾಡಾ		Corresponding fortnight of last year ಗುಜಷ್ಟಾ ಸಾಲ್ ಸೊಕಾಬಿಲಾ ಪಂಧ್ರವಾಡಾ		Present fortnight ಸುಜಕರ್ಕರ್ ಪಂಧ್ರವಾಡಾ		Past fortnight ಗುಜಷ್ಟಾ ಪಂಧ್ರವಾಡಾ		Corresponding fortnight of last year ಗುಜಷ್ಟಾ ಸಾಲ್ ಸೊಕಾಬಿಲಾ ಪಂಧ್ರವಾಡಾ		Present fortnight ಸುಜಕರ್ಕರ್ ಪಂಧ್ರವಾಡಾ		Past fortnight ಗುಜಷ್ಟಾ ಪಂಧ್ರವಾಡಾ		Corresponding fortnight of last year ಗುಜಷ್ಟಾ ಸಾಲ್ ಸೊಕಾಬಿಲಾ ಪಂಧ್ರವಾಡಾ	
	Srs	ch	Srs	ch	Srs	ch	Srs	ch	Srs	ch	Srs	ch	Srs	ch	Srs	ch	Srs	ch	Srs	ch	Srs	ch	Srs	ch	Srs	ch	Srs	ch	Srs	ch	Srs	ch	Srs	ch	Srs	ch
Bangalore ...	1	5	1	5	1	4	45	0	45	0	54	0	48	0	48	0	60	0	*	*	*	*	*	*	3	6	3	6	7	6	1	2	1	2	1	2
Kolar ...	2	8	2	8	2	8	75	0	75	0	75	0	50	0	50	0	50	0	*	*	*	*	*	*	4	0	4	0	4	0	1	0	1	0	1	0
Tumkur ...	2	6	2	0	1	8	80	0	80	0	80	0	32	0	32	0	32	0	*	*	*	*	*	*	4	0	4	0	4	0	1	0	1	0	1	0
Mysore ...	3	12	3	12	1	3	120	0	120	0	80	0	140	0	140	0	170	0	100	0	110	0	100	0	12	0	12	0	5	4	5	0	5	0	1	2
Hassan ...	2	6	2	6	2	6	240	0	240	0	240	0	120	0	120	0	120	0	*	*	*	*	*	*	4	0	4	0	6	0	1	8	1	5	1	8
Shimoga ..	2	6	2	6	2	6	*	*	*	*	*	*	112	0	112	0	224	0	*	*	*	*	*	*	3	0	3	0	4	13	1	10	1	10	1	8
Kadur ..	1	5	1	5	1	5	*	*	*	*	*	*	17	9	17	9	17	9	*	*	*	*	*	*	2	10	2	10	2	10	1	3	1	3	1	3
Chitaldrug ..	3	0	3	0	3	0	*	*	*	*	*	*	30	0	30	0	30	0	30	0	30	0	40	0	3	0	3	0	3	0	1	0	1	0	1	0

* Article not available.

Prices Current [Retail] of Food Grains, &c., at the Head-Quarters of the several Districts of the Mysore State during the fortnight ending 30th April 1906—*concld.*

ಸನ 1906ನೆ ಇಸವಿ ಏಪ್ರಿಲ್ ಮಾಹೆ 30ನೆ ತಾರೀಖಿಗೆ ಆಖೈರಾದ ಪಂಧ್ರಾವಾಡಾ ಬಾಬತು ಜಿಲ್ಲರೆ ಅಂಗಡಿಗಳಲ್ಲಿ ಫುರೋಖ್ತ ಆದ ಆಹಾರಜಿನಸಿ ವಗೈರೆ ನಿರಖುನಾಮಾ—ಡಿಸ್ಟ್ರಿಕ್ಟ್ ಹೆಡ್ ಕ್ವಾರ್ಟರಿಗಳ ಬಾಬತು-ಸಮಾಪ್ತಿ.

District ಡಿಸ್ಟ್ರಿಕ್ಟ್	Quantity per rupee by the standard seer of 80 tolas, &c.—*concluded* ರೂ. 1ಕ್ಕೆ 80 ತೊಲಾ ತೂಕದ ಬಾಬತು ಶೇರುಗಳು—ಸಮಾಪ್ತಿ																								Plough bullocks (pair) ಉಳೋ ಎತ್ತುಗಳು ಜೊತೆ 1ಕ್ಕೆ			Sheep (score) ಕುರಿಗಳು 20ಕ್ಕೆ		
	Garden produce.																													
	Cardamom Amomum Aromaticum ಯಾಲಕ್ಕಿ						Supari Areca catechu ಅಡಿಕೆ						Dry cocoanut Cocos nucifera ಖೊಬರಿ						Hides (cattle) ದನವಿನ ಚರ್ಮ											
	28						29						30						31						32			33		
	Present fortnight ಪ್ರಸಕ್ತದ ಪಂಧ್ರಾವಾಡಾ		Past fortnight ಗುಜಿಷ್ತಾ ಪಂಧ್ರಾವಾಡಾ		Corresponding fortnight of last year ಗುಜಿಷ್ತಾ ಸಾಲ್ ಸೊಕಾಬಿಲಾ ಪಂಧ್ರಾವಾಡಾ		Present fortnight ಪ್ರಸಕ್ತದ ಪಂಧ್ರಾವಾಡಾ		Past fortnight ಗುಜಿಷ್ತಾ ಪಂಧ್ರಾವಾಡಾ		Corresponding fortnight of last year ಗುಜಿಷ್ತಾ ಸಾಲ್ ಸೊಕಾಬಿಲಾ ಪಂಧ್ರಾವಾಡಾ		Present fortnight ಪ್ರಸಕ್ತದ ಪಂಧ್ರಾವಾಡಾ		Past fortnight ಗುಜಿಷ್ತಾ ಪಂಧ್ರಾವಾಡಾ		Corresponding fortnight of last year ಗುಜಿಷ್ತಾ ಸಾಲ್ ಸೊಕಾಬಿಲಾ ಪಂಧ್ರಾವಾಡಾ		Present fortnight ಪ್ರಸಕ್ತದ ಪಂಧ್ರಾವಾಡಾ		Past fortnight ಗುಜಿಷ್ತಾ ಪಂಧ್ರಾವಾಡಾ		Corresponding fortnight of last year ಗುಜಿಷ್ತಾ ಸಾಲ್ ಸೊಕಾಬಿಲಾ ಪಂಧ್ರಾವಾಡಾ		Present fortnight ಪ್ರಸಕ್ತದ ಪಂಧ್ರಾವಾಡಾ	Past fortnight ಗುಜಿಷ್ತಾ ಪಂಧ್ರಾವಾಡಾ	Corresponding fortnight of last year ಗುಜಿಷ್ತಾ ಸಾಲ್ ಸೊಕಾಬಿಲಾ ಪಂಧ್ರಾವಾಡಾ	Present fortnight ಪ್ರಸಕ್ತದ ಪಂಧ್ರಾವಾಡಾ	Past fortnight ಗುಜಿಷ್ತಾ ಪಂಧ್ರಾವಾಡಾ	Corresponding fortnight of last year ಗುಜಿಷ್ತಾ ಸಾಲ್ ಸೊಕಾಬಿಲಾ ಪಂಧ್ರಾವಾಡಾ
	Srs	ch	Srs	ch	Srs	ch	Srs	ch	Srs	ch	Srs	ch	Srs	ch	Srs	ch	Srs	ch	Srs	ch	Srs	ch	Srs	ch	Rs a p	Rs a p	Rs a p	Rs a p	Rs a p	Rs a p
Bangalore .	0	4	0	4	0	3	1	4	1	5	1	6	2	6	2	6	3	3	0	15	0	15	0	15	120 to 150	120 to 150	120 to 150	160 0 0	160 0 0	160 0 0
Kolar ...	0	4	0	4	0	4	1	0	1	0	1	0	3	0	3	0	3	0	2	0	2	0	2	0	100 0 0	100 0 0	100 0 0	100 0 0	100 0 0	100 0 0
Tumkur ...	0	2	0	2	0	2	1	4	1	4	1	4	3	0	3	0	2	8	1	0	1	0	1	0	40 0 0	40 0 0	40 0 0	100 0 0	100 0 0	80 0 0
Mysore ...	2	0	2	0	0	4	4	4	4	4	1	9	2	10	14	0	1	14	0	10	0	10	0	13	70 0 0	70 0 0	70 0 0	100 0 0	100 0 0	100 0 0
Hassan ...	0	6	0	6	0	7	2	6	2	0	2	6	2	8	2	8	2	8	2	8	2	8	2	8	20 0 0	30 0 0	30 0 0	80 0 0	100 0 0	100 0 0
Shimoga ...	0	6	0	6	0	7	1	8	1	8	1	3	3	0	3	0	3	0	1	8	1	8	1	8	60 0 0	60 0 0	50 0 0	60 0 0	40 0 0	60 0 0
Kadur ...	0	6	0	6	0	3	1	3	1	3	1	3	2	1	2	1	2	1	Rs a p 2 0 0		Rs a p 2 0 0 per hide		Rs a p 2 0 0		40 0 0	40 0 0	40 0 0	60 0 0	60 0 0	60 0 0
Chitaldrug	0	1/8	0	1/8	0	1/8	2	0	2	0	2	0	3	0	3	0	3	0	3	0	3	0	3	0	From 20 to 80 Rs.	From 20 to 80 Rs.	From 20 to 80 Rs.	From 80 to 120 Rs.	From 80 to 120 Rs.	From 80 to 120 Rs.

By Order,

B. K. VENKATA VARADA IYENGAR,

Secy. to Govt., Gen. & Rev. Dept.

INDEX

TO THE

MYSORE GAZETTE.

PART I.

NOMINAL.

FROM 1ST JULY TO 31ST DECEMBER 1905.

A

bdul Gaffar, promoted as Troop Commander, 5th grade. 655.
——Do do 4th grade. 716.
bdul Gaffoor, do 3rd grade. 655.
bdul Jaleel, do as Jamadar, 2nd grade. 682.
bdul Tohir Bintoory, do as Resaldar Squadron Commander. 716.
bdul Wahab, Hospital Asst., do as 1st grade Senior Hospital Asst. 724.
hamed Ali, Mr., Extra Asst. Comr.—Priv. leave. 586.
d Hussain, promoted as Jamadar, 2nd
Sultan, Mr., Probationary Asst. Priv. leave. 680.
engar, Mr. K., Sub-Asst. Surgeon, to Saklespur Local Fund Dispensary.
——— Amildar, *sub pro tem*, to revert st in the Forest Conservator's office.
Kadam, promoted as Squadron Commander. 655.
ndalwar, Mr. M. A., Asst. Engr.—Priv. leave. 724.
ppannaiengar, Mr. S. N., Rev. Probationer, appointed as a 3rd class Magistrate. 595.
ppavu Mudaliar, Mr. A., Asst. Examr., to officiate for Examiner, P. W. D. and Railway Accts. 596.
ppaiya, Mr. C., Asst. Conservator, transferred to Tumkur. 710.
——Priv. leave. 757.
ravamudu Iyengar, Mr. G., Asst. Comr.—Priv. leave. 586.
runachalla Iyer, Mr. T. K., Sub-Asst. Engineer, promoted to 1st class, temporary. 605.
runachalla Mudr., Mr. V., Exec. Engineer.—Priv. leave. 681.
rmugam Mudaliar, Mr. T. V., Civil Surgeon, posted as Medical Officer, Victoria Hospital, Bangalore. 620.
sirvatham, Mr. G., Sub-Asst. Surgeon, posted to do duty in Genl. Hospital, Mysore. 620.

B

Ball, Mr. J., Amildar.—Priv. leave. 715.
———transferred to Gubbi Tk. 745.
Basavaradhya, Mr. B., Supt. of Genl. and Rev. Secretariat, to be the Dy. Registrar of Chief Court. 612.
———to be in charge of duties of Registrar of the Chief Court. 744.
Basavaraj Urs, Dy. Amildar, to act as Amildar and 3rd class Magistrate of Pavagada. 537.
Bava Rao, Mr. T., Extra Asst. Comr.—Commutation of priv. into sick leave. 710.
Bhima Rao, Mr. B., Probationary Extra Asst. Comr., transferred to Chitaldrug Dist. Try. 578.
———appointed a member of the Committee of Kannada Girls' School, Chitaldrug. 665.
Bhore, Mr. John, promoted as Asst. Engineer, 1st class, temporary. 605.
Bowring, Mr. P. F., Asst. Comr.—Priv. and furlough leave. 595.
Burr, Mr. F. H., promoted as 2nd class Supervisor. 647.

C

Carr, Mr., F. E. C., Inspector-Genl. of Police, Extraordinary leave. 638.
———assumed charge of the office of Inspector-Genl. of Police. 638.
Chamaraj Urs, B, promoted as Regimentdar. 606.
Chandra Rao Runnoray, promoted as 2nd in Command. 655.
Chandrasekhara Aiyar, Mr. K. S., Dy. Secy.—Priv. leave. 710.
Chandy, Mr. K., Asst. Comr., made over charge of Shimoga Dist. and Treasury. 596.
Chennigappa, Mr. B. N., Amildar, *sub pro tem*—Priv. leave. 604.
———Dy. Amildar, *sub pro tem*, confirmed. 612.
Chinnaswami Mudaliar, A., promoted as 3rd class Overseer. 757.
Chokkanatha Raja, T., promoted as Troop Commander, 4th grade. 655.

Chokkanna, Mr. T., Asst. Comr., directed to take down the evidence in Eng. language. 613.

Clapham, Mr. J., Dy. Registrar, Chief Court —Priv. leave. 536.

D

David, Mr. G. S., promoted to 3rd class Asst. Surgeon. 612.

D'Cruz, Mr. J. E. A., Exec. Engineer, to be in charge of Chairman's office, Mysore City. 612.

D'Souza, Mr. P. G., Asst. Comr., promoted to 2nd class. 701.

D'Vaz, Miss M., promoted as 1st class Asst. Surgeon. 646.

Devaraj Urs, Mr. D., Dy. Comr.—Extension of priv. leave. 568, 578.

———received charge of the Bangalore Dist. and Try. 596.

Doraswami Iyer, Mr. K., Dy. Comr.—Extension of priv. leave. 568, 690.

Dunning, Mr. G., Extra Asst. Comr.—Priv. leave. 757.

Dvarakanath, Mr. B., Divisional Supt., Bangalore Power Scheme—Sick leave. 591.

E

Ellis, Mr. J. W. Hay, promoted as 1st class Overseer. 647.

G

Garudacharya, Mr. B. B., promoted as 2nd class Asst. Engineer, temporary. 605.

Gopalachar, C., Head Clerk, Tumkur Dist., appointed to act as Amildar and 3rd class Magistrate of Tiptur Tk. 568.

———Dist. Sheristadar, appointed to act as Amildar and 3rd class Magistrate of Gubbi Tk. 604.

———appointed to act as Amildar of Maddagiri Tk. 690.

Gopalakrishna Iyengar, Mr. N., Amildar.—Priv. leave. 537.

———confirmed in the 3rd class. 612.

———transferred to Seringapatam. 745.

Gopaliengar, Mr. N. T., Munsiff, promoted to 2nd class, supernumerary. 587.

———transferred to Hole-Narsipur. 652.

Govinda Rao, D., promoted as 1st class Overseer. 757.

Gulab Singh, promoted as Subedar, 2nd grade. 732.

Gulam Ahmed, Jamadar, promoted to Subedar, 2nd grade. 576.

Gulam Mahomed Meccai, Mr., confirmed as Dy. Amildar. 612.

———Amildar, *sub pro tem*, to revert to his post as Dy Amildar and posted to Closepet Sub-Tk. 630.

Guru Rao Mr., V. N., Amildar, transferred to Honnali. 655.

———posted to Malvalli. 665.

H

Hanumantha Rao, Mr. G., Amildar, transferred to Mudgere. 562.

———Mr. K., confirmed as Dy. Amildar. 612.

———Powar, Regimental Dafadar-Major, promoted to 5th grade. 716.

Hassan Ali, Mr. M., Probationary Asst. Comr.—Priv. leave. 680.

Hayathullakhan, promoted as 2nd grade Troop-Comdr. 716.

Heera Singh, Mr. B., Asst. Conservator of Forests.—Priv. leave. 630.

———promoted as Dy. Conservator of Forests, 3rd class. 646.

———transferred to Kadur Dist. 711.

Hume Wright, Mr. G., handed over the charge of the offices of Supdt. of Govt. Press and of Stationery, Compiler of the *Mysore Gazette* and Registrar of Authorized Publications. 596.

J

Jaganatham Pillai, Mr. M., Sub-Asst. Surgeon, posted to Plague duty, Mysore. 620.

———Mudaly, 3rd class Hospital Asst., confirmed. 701.

Jaganatha Rao, Mr. B., confirmed as Dy. Amildar. 612.

Jayaram, Mr. B., Asst. Geologist, appointed to act as Dy. Inspr. of Mines. 702.

Jayaram Iyer, Mr. T. E., Munsiff, transferred to Bangalore. 652.

John, Mr. D., appointed to act as Sub-Asst. Surgeon. 737.

K

Kantaraj Urs, Mr. M.—Extraordinary leave. 612.

Kantiravachar, Mr. V., Amildar, posted to Tumkur Tk. 757.

Kesar Singh, Mr., Amildar, transferred to Pavagada Tk. 665.

Kesavachar, Mr. H., *sub pro tem* Amildar.—Priv. leave. 568.

———Cancellation of portion of priv. leave. 595.

———Priv. leave preparatory to retirement. 646.

———Mr. K, confirmed as Dy. Amildar. 612.

Kesava Naik, promoted to Subedar, 2nd grade. 670.

Khadir Hussain, promoted as Jamadar, 2nd grade. 639.

Khande Row Ghatkey, promoted as Troop Commander. 1st grade. 655.

Kodandapani Mudaliar, Mr. A., Sub-Asst. Surgeon.—Extension of extraordinary leave. 586, 737.

Krishna Jetti, H., Hospital Asst., promoted to 1st class. 587.

Krishnaiengar, Mr. K., Exec. Engr., transferred to Kolar Dn. 681.

Krishnaiengar, Mr. T., Munsiff, temporarily promoted to 3rd class. 587.

———transferred to Tumkur. 652.

Krishna Iyer, Mr. S., Amildar.—Cancellation of portion of priv. leave. 578.

Krishnaji Narayan, Mr., Amildar, transferred to Pavagada. 665.

———transfered to Honnali. 665.

———Privilege leave. 745.

Krishnappa, Tk. Sheristadar, appointed to act as Amildar and 3rd Class Magistrate of T.-Narsipur Tk. 595.

———Mr. S., Amildar.—Cancellation of portion of priv. leave. 630.

Krishnaraj Urs, promoted to Subedar-Major. 670.

Krishna Rao, promoted as Jamadar, 2nd grade. 682.

———Mr., Badami, Extra Asst. Comr., promoted to 3rd class. 571.

Krishna Rao, Burli, Hd.-quarter Inspr. of Police, appointed to act as Dy. Amildar and 3rd Class Magte. of Harihar. 604.

———to continue as Dy. Amildar. 715.

Krishna Rao, Mr. C., Amildar, vested with certain powers. 646.

Krishna Rao, Mr. C. R., Amildar, appointed as 2nd Class Magistrate and vested with certain powers. 595, 646.

———Mr. M., Amildar, posted to Nelamangala Tk. 595.

———transferred to Magadi. 654.

———Mr. S., Munsiff, appointed as a member of Committee for the management of Kannada Girls' School at Chitaldrug. 612.

Krishna Rao, Sindhay, Regimental Dafadar-Major, promoted as Troop Commander, 5th grade. 655.

———Do do 4th grade. 716.

Krishna Rao, Mr. V., Amildar, to act as Extra Asst. Comr. and to be in the charge of Kadur Dt. Try. 690.

———appointed as 1st Class Magte. 757.

Krishna Sastri, Mr. B. C., Amildar.—Privilege leave. 586.

———transferred to Hoskote. 654.

———Cancellation of priv. leave. 670.

Krishna Singh, Mr. B., Amildar, transferred to Arkalgud. 654.

———transferred to Manjarabad. 670.

———appointed as 2nd Class Magistrate. 711.

Krishnaswamaiengar, Mr. A., Amildar.—Privilege leave. 724.

Krishnaswami Iyer, Mr. E. S., Civil Surgn. —Privilege leave. 638.

———V., Overseer, promoted as Supervisor, 3rd class. 716.

Krishne Urs, Mr. A., Amildar—Extension of priv. leave. 586.

———Privilege and extraordinary leave. 638.

Kuppasami Mudr., Mr. T. V., Asst. Surgn., promoted to 1st class. 612.

———posted as Dist. Medl. and Sany. Officer, Kadur Dist. 620.

L

Lakshmana Iyer, Mr. T. K., Amildar.—Cancellation of privilege leave. 620.

———Privilege leave. 723.

Lakshmana Rao, T. S., Overseer, promoted to 1st class. 716.

———V., Overseer, promoted to 3rd class. 716.

Lakshman Rao, Mr. B. V., Supt., Dewan's Personal Establishment, to act as Private Secy. to the Dewan. 744.

Lakshman Rao Pole, promoted as Troop Commander, 2nd grade. 655.

———Do Adjutant. 716.

Lakshminarasimha Rao, Mr. F., Examiner, Comptr.'s Office, appointed as Asst. Comptr. 595.

———Privilege leave. 701.

Lakshminarayanaiya, Mr. K., Munsiff, promoted to 3rd class. 587.

Lavelle, Mr. George, Dy. Inspr. of Mines.—Privilege leave. 639.

———Extension of privilege leave. 670.

Lotbiniere, Joly de, Major A. C., promoted as Exec. Engr., 1st grade, Supernumerary. 691.

M

Madhavan Nair, Mr. P., Sub-Asst. Surgn.—Extension of extraordinary leave. 604.

Madiah, Mr. C., Rao Bahadur, handed over charge of the office of the Inspr.-Genl. of Police. 638.

Mahadeva Rao, Mr. N. T., Extra Asst. Comr.—Privilege leave. 715.

Mahadeva Sastri, Mr. C. A., Exec. Engr., promoted to 1st class, temporary. 605.

———Mr. A., Curator of Oriental Library—Privilege leave. 612.

Mahadevayya, Mr. P., Advocate, appointed to act as Munsiff of Yedahalli. 536.

Mahomed Nasir Ahmed, Troop Commander, promoted to 4th grade. 655.

———Do to 3rd grade. 716.

Mahomed Peer, Dy. Amildar, appointed to act as Amildar and 3rd Class Magte. of Holalkere. 604.

———to continue as Amildar. 715.

Mahomed Raza, Mr., Amildar, transferred to Anekal. 562.

———Privilege leave. 578.

———Cancellation of privilege leave. 586.

Mahomed Usman, Mr. B., Asst. Surgn., to be in charge of Dist. Medl. and Sany. Office, Shimoga. 586.

———promoted to 3rd class. 612.

Margenout, Mr. E. W., Overseer, promoted to 2nd class. 716.

Mascarenhas, Mr. J. V., Sub-Asst. Surgn.—Privilege leave. 620.

Mascarenhas, Mr. J. V., Sub-Asst. Surgn.—Extension of privilege leave. 680.
———promoted to 2nd class. 681.
McHutchin, Mr. W., Suptg. Engr., promoted as Chief Engr., 3rd class. 573.
———Do 2nd class. 601.
Mir Mohiudin, promoted as Squadron Commander. 655.
Mir Alli Khan, appointed as Jamadar, Troop Commander, 5th grade. 732.
Mir Baker Ali, promoted as Subedar, 2nd grade. 670.
Mohadin Sheriff, Mr., confirmed as Dy. Amildar. 612.
Molloy, Mr. H. J., Exec. Engr.—Privilege leave. 613.
Mrityunjaya Iyer, Mr. A., Amildar.—Privilege leave. 690.
Murad Beg, promoted as Squadron Commander. 655.
Muthaiya, Mr. K., Sub-Asst. Conservator of Forests.—Privilege leave. 604.
———Officer in charge of Game Preserves, appointed as Asst. Conservator of Forests, temporary. 630.
Muthuswami Doss, Mr. V., Sub-Asst. Surgn.—Privilege leave. 710.
———Cancellation of portion of privilege leave. 756.
Mylar Rao, Mr. K., Ag. Extra Asst. Comr., directed to take down the evidence of witnesses in English language. 613.

N

Nagavkar, Mr. A. S., President.—Privilege leave. 595.
Nallanayaga Mudr., Mr. A., Supervisor, promoted to 1st class. 757.
Nanasami Rao, Mr. R., Ag. Amildar, confirmed in 3rd class. 612.
Nanjappa, Mr. C. A., Asst. Surgn., posted as Resident Medl. Officer, Victoria Hospl. 620.
———Mr. T. S., Civil Surgn.—Leave on private affairs. 567.
Nanjundiah, M., Hospl. Asst., promoted to 1st class. 587.
Nanjundaradhya, Mr. B., Sub-Asst. Engr.—Privilege leave. 565.
Nanjundaraj Urs, Mr. H., Supt., Amrut Mahal Dept.—Privilege leave. 621.
Narain Rao, Mr. M., Dy. Comr.—Sick leave. 630.
Narasimhachar, G., Head Acctt., to act as Dy. Amildar and 3rd Class Magte. of Koratagere. 537.
Narasimha Iyengar, H., promoted as 2nd class Overseer. 757.
Narasimha Iyengar, Mr. N., Munsiff.—Sick leave. 536.
Narasinga Rao, Mr. D., Acting Amildar, to revert to his post. 655.
———appointed to act as Amildar and 3rd Class Magte. of Nagar. 680.
Narayana Rao, Mr. C. V., Amildar.—Privilege leave. 568.
———Cancellation of privilege leave. 670.
Narayana Rao, Mr. G., confirmed as Dy. Amildar. 612.
Narayana Rao, Mr. M. S., Dy. Comr.—Privilege leave. 536.
———Extension of privilege leave. 578.
———assumed charge of Shimoga Dist. and Try. 596.
———Cancellation of portion of privilege leave. 604.
Narayana Rao, Mr. S. Advocate, appointed as Govt. Advocate. 646.
Narayana Rao, C., Hd.-quarter Inspr. of Police of Shimoga Dist., appointed to act as Amildar and 3rd Class Magte. of Sagar Tk. 604.
———to act as Amildar and 3rd class Magte., Tumkur. 710.
———Extra Asst. Comr.—Privilege leave. 710.
Narayanasami Mudr., Mr. C. R., confirmed as Dy. Amildar. 612.
———Privilege leave. 723.

P

Padmanabhan, S. R., 3rd Class Hospital Asst., confirmed. 701.
Palpu, Mr. P., to be as Personal Asst. to Senior Surgn. in addition to his own duties. 680.
Parthasarathi Iyengar, Mr. V., Amildar, transferred to Sagar. 562.
———Extension of privilege leave. 604.
———Cancellation of privilege leave. 690.
Paul, Miss S. A., Hospital Asst., promoted to 1st class. 587.
Peter Xavier, Senior Hospital Asst., appointed as Inspecting Medl. Officer at Bowringpet Ry. Station. 692.
Plumer, Mr. R. B., Asst. Comr.—Cancellation of portion of furlough leave. 690.
———vested with certain powers. 701.
Popathbai Dungarshi, Mr., Asst. Engineer, to be as Exec. Engineer, Chitaldrug. 681.
Prahlada Rao, Mr. K., Asst. Engineer, promoted as Executive Engineer, 4th Class. 665.

R

Raghavachar, Mr. F. S., *sub pro tem* Amildar.—Priv. leave. 595.
Raghavalu Naidu, Mr. B. P., Exec. Engr.—Priv. leave. 621.
Raghunatha Iyengar, B., promoted as Supervisor, 3rd Class. 757.
Rajagopalachar, Mr. V. S., *sub pro tem* Amildar.—Priv. leave. 604.
———Extension of priv. leave. 665.
———to revert to his post in the Police Dept. 670.
———Cancellation of portion of priv. leave. 710.
———Extraordinary leave. 715.
Rajagopala Mudaliar, V. S., Hospital Asst., promoted as 1st grade Senior Hospital Asst. 724.
Rajaram Rao, Mr. C. A., Asst. Surgeon.—Priv. leave 586.
Rajaratna Mudaliar, Mr. V. A., Registrar, Chief Court.—Priv. leave. 744.

Rajaratnam Pillay, B. A., 3rd Class Hospital Asst., confirmed. 701.
Rajoji Kadam, promoted as Troop Commander, 3rd grade. 655.
Ramachandra Rao, Mr. M. S., Rev. Probationer, appointed to act as *sub pro tem* Amildar. 630.
——confirmed as Amildar of the last grade. 654.
——posted to Kadur. 654.
——Priv. leave. 737.
——Mr. T., Amildar, transferred to Chitaldrug. 562.
Ramaiya, Mr. H., Sub-Asst. Conservator, to act as Dist. Forest Officer, Tumkur. 757.
Ramakrishnaiya, C., promoted as 3rd class Supervisor. 647.
Rama Rao, Mr. C., Asst. Comr.—Priv. leave. 638.
——Extension of priv. leave. 731.
——C. V., Tk. Sheristadar, to be in charge of Kadur Tk. 737.
——Mr. M. G., Asst. Conservator, transferred to Mysore Dist. 711.
——Mr. N., Sub-Asst. Engineer.—Priv. leave. 573.
——promoted as 3rd Class Asst. Engineer, temporary. 605.
——Mr. N., Amildar, appointed as 2nd class Magistrate. 711.
Ramaswamaiya, Mr. B., Ag. Extra Asst. Comr., to do duty in the Police Dept. of the Kadur Dist. 536.
Ramaswamaiya, Mr. C. D., Asst. Supt. of Police. —Priv. leave. 620.
Ramaswamiengar, Mr. B., appointed to act as Dy. Secretary. 724.
Ramaswami Iyengar, P. S., Hospital Asst., promoted to 1st Class. 587.
——Mr. N., *sub pro tem* Amildar, to revert to his post. 654.
——Priv. leave. 690.
——Doctor S. V., Govt. Oculist.—Priv. leave. 680.
Ramaswamy Iyengar, N., Hd. Clerk, Hassan Dy. Comr.'s office, to act as Amildar of Arsikere. 723.
Rangachar, Mr. N., Sub-Asst. Surgeon, promoted to 1st class. 654.
Ranganatha Rao Saheb, Mr. C., *sub pro tem* Amildar, confirmed as Amildar. 572.
Ranganna, Mr. S., promoted as 2nd class Asst. Surgeon. 646.
Ranga Rao, Mr. M., Amildar.—Priv. leave. 604.
——to act as Extra Asst. Comr. and posted to Excise Dept. 745.
Rangaswamy Iyengar, Mr. Justice A., Judge, Chief Court.—Cancellation of portion of priv. leave. 586.
——Mr. V., Exec. Engineer, promoted to 3rd class, temporary. 605.
Ratnasami Pillay, M. J., Hospital Asst., promoted to 2nd class. 587.
Royalu Chetty, Mr. T., transferred to Kolar Dist. Try. 573.
——posted to Tumkur Dist. Try. 578.
——appointed as Extra Asst. Comr. of the 4th class. 605.
——appointed as Magistrate of 3rd class. 646.

S

Sadasivam Pillay, Mr. E. C., Amildar.—Priv. leave. 604.
——Extension of priv. leave. 638.
——transferred to Jagalur. 654.
——T., 3rd class Hospital Asst., confirmed. 701.
Sadasiva Rao, Mr. M., Rev. Probationer, appointed to act as Amildar and 3rd class Magistrate of Arkalgud. 670.
——Mr. V. P., Honorary Sub-Asst. Surgeon, posted to do duty in Dist. Hospital, Chikmagalur. 620.
Sambasiva Iyer, Mr. V. S., Curator of the Geological Museum.—Priv. leave. 737.
Sarmust Khan, promoted as Troop Commander, 1st grade. 655.
Scaldwell, Mr. R. W., appointed as Sub-Asst. Engineer, 1st class. 647.
Scott, Mr. W. H., Examiner, Public Works Accounts—Priv. leave. 596.
——promoted to 3rd grade, supernumerary. 605.
Seetaramaiya, Mr. B. T., *sub pro tem* Amildar.—Priv. leave. 537.
——Mr. H., Amildar, to act as Extra Asst. Comr., Excise Dept., and posted to Tumkur. 710.
Seppings, Mr. J. M., Supervisor, promoted to 2nd class. 716.
Seshadriengar, Mr. C., Asst. Comr., to be in charge of the Kolar Dist. Try. 587.
——to be in charge of Chikballapur group of taluks. 638.
——promoted to 2nd class Extra Asst. Comr. 681.
Seshagiri Rao, Mr. A., Sub-Asst. Surgeon, to look after the duties of Civil Surgeon, Kolar Gold Fields. 638.
Sesha Iyengar, Mr. T. S., promoted to 2nd class Asst. Engineer, temporary. 605.
——Commutation of furlough into sick leave. 711.
Setlur, Mr. A. T., Offg. Chief Inspector of Explosives and Mining Surveyor, to be in charge of the current duties of the Registrar in addition to his own. 596, 631.
Shamanna, Mr. B., Excise Asst. Comr.—Priv. leave. 690.
——Extension of priv. leave. 756.
Shama Rao, Mr. M., Asst. Secy. to Govt., appointed as Registrar of Co-operative Societies in Mysore. 646.
Sheik Abdulla, Mr., confirmed as Deputy Amildar. 612.
Sitaramaiya, Mr. Y., Asst. Conservator of Forests.—Priv. leave. 537.
Sitaram Rao, Mr. D., Chairman of the Board of Trustees for the Improvement of Mysore City.—Priv. leave. 612.
——Extension of priv. leave. 654.
Sivaprakasam Pillay, Mr. P. A., Addl. Munsiff. —Sick leave. 568, 690.
——Cancellation of sick leave. 654.

Srikantaiya, Tk. Sheristadar, to act as Amildar and 3rd class Magistrate of Nagamangala. 537.

Srikantaiya, Mr. B. N., promoted as 2nd class Supervisor. 757.

———Mr. K., Ag. Extra Asst. Comr., confirmed in the 5th class. 757.

Srikantesa Gowda, Mr. M. L., Munsiff, confirmed in the 3rd class. 587.

———transferred to Dodballapur. 652.

Srinivasaiengar, Mr. G. R., Amildar, confirmed in the 2nd class. 612.

———to act as Asst. Comr. of the last class and posted to Shimoga Dist. Treasury. 680.

———to do duty in the Excise Dept. 745.

———Mr. K. R., Offg. Dy. Comr., handed over charge of the Bangalore Dist. and Treasury. 596.

———Mr. B. C., Asst. Engineer.—Priv. leave. 702.

Srinivasa Iyengar, Mr. M. A., Rev. Probationer and 3rd class Magistrate, to act as Amildar and be in charge of Mysore Tk. 638.

———transferred to Mulbagal Tk. 745.

———S., Head-quarter Inspector of Police, Bangalore, to act as Dy. Amildar of French Rocks. 723.

Srinivasa Iyer, Mr. S., Sub-Asst. Engineer.—Priv. leave. 691.

Srinivasa Murti, Mr. M., Private Secretary to the Dewan.—Sick leave. 744.

Srinivasa Rao, Mr. M., Sub-Asst. Conservator of Forests.—Sick leave. 744.

———Mr. P., Asst. Comr., to revert to Tumkur Dist. 587.

———promoted as 2nd class Extra Asst. Comr. 701.

———Salika, promoted as Troop Commander, 1st grade. 716.

———Mr. Y., Offg. Suptg. Engineer, promoted to Suptg. Engineer, temporary. 605.

———Yello, Mr., Sub-Asst. Supt., Rev. Survey.—Priv. leave. 638.

———Extension of priv. leave. 731.

Steel, Mr. F. A., Asst. Engineer.—Priv. leave. 591.

———Extension of priv. leave. 631.

Subbaraj Urs., promoted as Troop Commander, 3rd grade. 655.

Subba Rao, Mr. B., Registrar, Geol. Dept.—Extraordinary leave. 596.

———Extension of extraordinary leave. 631.

———Mr. B., Exec. Engineer, 3rd Class, *sub pro tem*, promoted to 2nd class, temporary. 605.

———transferred to Mysore Division. 681.

———Mr. P., Head-quarter Inspector of the Kolar Dist., appointed to act as Amildar and 3rd Class Magistrate of the Chintamani Tk. 604.

———appointed to act as Amildar. 724.

Subbaraya Iyer, Mr. S. R., Dist. Judge, transferred to Shimoga Dn. 680.

Subrayalu Naidu, Mr. P., Amildar.—Priv. leave. 595.

Sundaram Iyer, Mr. R. V., Offg. Exec. Engineer, transferred to Shimoga Division. 681.

———Priv. leave. 691.

Sundararaja Iyengar, Mr. T. K., Ag. Extra Asst. Comr., transferred to Chitaldrug Dist. Treasury. 573.

———to revert to his post as Amildar of the Mysore Tk. 630.

———to act as Asst. Comr. and to be in charge of Dist. Try., Kolar. 638.

———re-appointed as 1st Class Magistrate. 654.

———transferred to Kolar Dist. 745.

Suryanarayana Rao, Mr. C., Supervisor, 1st class, conferred with the title of Honorary Asst. Engineer. 639.

Swamy Rao, C., Judicial Hd. Munshi, acted as Amildar and 3rd class Magistrate of Tarikere Tk. 740.

Syed Abdul Hameed, promoted to Subedar Major. 757.

———Ahmed, promoted as Troop Commander, 2nd grade. 655.

———Fatulla, do do 1st grade. 655.

———Hussain, dafadar, promoted as 5th grade Troop Commander. 655.

———promoted as 4th grade Troop Commander. 716.

Syeduddin Hussain, Mr. C., Asst. Supt. of Police.—Priv. leave. 536.

———Extension of Priv. leave. 665.

T

Thomas, Mr. P. B., Supt. of Police.—Priv. and furlough leave. 710.

Thumbu Chetty, Mr. T., Probationary Asst. Comr., posted to Bangalore Dist. Treasury. 573.

V

Vaidyanatha Iyer, Mr. S., Senior Asst. Comr.—Cancellation of protion of priv. leave. 595.

Vaiyapuri Chetty, Mr. T., Chief Asst. to Comptroller.—Priv. leave. 701.

Vedantadesigam Iyengar, Mr. A., Ag. Extra Asst. Comr., to do duty in the Police Dept. of the Kolar Dist. 536.

———Priv. leave. 701.

———Cancellation of priv. leave. 744.

Venkatachar, Mr. H. S., Amildar.—Priv. leave. 537.

———transferred to Seringapatam. 655.

———Cancellation of portion of priv. leave. 710.

———transferred to Nagamangala. 745.

Venkatakrishnayya, Mr. S., Advocate, appointed to act as Addl. Munsiff of Mysore. 568, 690.

Venkata Rao, Mr. N., reverted to his post as Asst. Comr. and Magistrate of the Mysore City. 587.

———handed over charge of the Tumkur Dist. and Treasury. 620.

Venkatavardan Iyengar, Mr. S., transferred to Bangalore Dn. 600.
Venkatramaiya, Mr. T., Amildar, to take charge of Mulbagal Tk. 630.
———transferred to Mysore. 745.
Venkat Rao, Mr. R. Nijagal, Asst. Engineer.—Priv. leave. 691.
Venkatesaiya, Mr. B. M., Amildar, to take charge of Hiriyur Tk. 630.
———Priv. leave. 732.
———Mr. B. S., Amildar, to be in charge of Koppa Tk. 715.
Venkoba Rao, Mr. T., Munsiff, transferred to Maddagiri. 652.
Vijiarangam Naidu, Mr. C., promoted as Sub-Asst. Engineer, 1st class, temporary. 605.
Visvanatha Rao, Mr. M. P., Amildar, to take charge of the Holalkere Tk. 670.
———Extension of priv. leave. 710.
Vyasa Rao, C., Tk. Sheristadar, was in charge of Mudgere. Tk. 638.

W

Wheeler, Mr. H. L., promoted as 1st class Supervisor. 647.
Wilkinson, Mr. F., Inspector of Police, to act as Asst. Supt. of Police, 2nd class, of the French Rocks. 536.

Y

Yates, Mr. C. H., received charge of the offices of Supt. of the Govt. Press and of Stationery, Compiler of the *Mysore Gazette* and Registrar of Authorized Publications. 596.

Z

Zahirddin Maccai, Mr., Supt. of Police.—Priv. leave. 654.
———Cancellation of priv. leave. 690.

The Mysore Gazette.

Vol. 41.] PUBLISHED BY AUTHORITY. [No. 22.

BANGALORE, THURSDAY, MAY 31, 1906.

☞ Separate paging is given to the Parts in order that they may be filed as distinct compilations.

CONTENTS.

PART I —Notifications by the Government of His Highness the Maharaja of Mysore.

PART II.—Notifications by the Government of India; The Hon'ble the Resident in Mysore; Chief Judge; Survey and Inam Superintendent; Comptroller; Chief Engineer; Mysore State Railway; Amrut Mahal Department; Inspector-General of Registration; Senior Surgeon; District and Sessions Judges; Sub-Judges; Deputy Commissioners of Districts; Forest Officers; Presidents, Bangalore and Mysore City Municipalities; Season Reports; Mortuary and Meteorological Statements; Postal Notices; Civil and Military Station Notifications, &c.

PART III.—Legislative Measures and Rules thereunder.

PART IV.—Official Papers.

PART I.

Notifications by the Government of His Highness the Maharaja of Mysore.

GENERAL AND REVENUE.

No. 12112—*San.* (7-05)-157, *dated* 23*rd*—25*th May* 1906.

For "18th May 1906" and "22nd May 1906" occurring in Notification No. 11235—San. 7-05-147, dated the 1st May 1906, published on page 103, Part I of the *Mysore Gazette* of the 3rd May 1906 read "1st June 1906" and "10th June 1906."

No. 12342—*San.* (15-05)-14, *dated* 30*th May* 1906.

It is hereby notified for general information that the place mentioned hereunder in the District of Hassan will be deemed to be an infected area for the purposes of the Regulations issued with Notifications Nos. 9383—Mis. F. 21-96 and 9384—Mis. F. 21-96, dated the 10th February 1898, under the Epidemic Diseases Regulation:—

Place.	*Taluk.*
Alur Petta	... Alur Sub-Taluk.

No. G. 5420—*G. M.* 113-05-5, *dated 3rd May* 1906.

The Government of His Highness the Maharaja are pleased to prescribe the following Rules for regulating the Grant of Scholarships for Scientific Research and Technical Education from the Damodar Dass Charities Fund :—

RULES.

I. With a view to encourage and promote Scientific Research and Technical Education among the people of Mysore, His Highness the Maharaja of Mysore has been pleased to sanction the following scholarships which shall be paid from four-fifths of the annual proceeds of the Damodar Dass Charities Fund.

II. The scholarships will be known as the Mysore Government Damodar Dass Scientific Research and Technical Education Scholarships.

III. There will be ordinarily two scholarships assigned annually, and each will be tenable for two years, or such other period as may be fixed by the Mysore Government with reference to the subject of research or of education selected; and the holder of the scholarship shall study in such University or College or Institution in England or elsewhere as shall be decided from time to time by the Mysore Government.

IV. A candidate for one of the scholarships must not be over twenty-two years of age, must have graduated from a College in the Mysore State and must be a native of Mysore by birth or domicile; provided that in default of born or domiciled Mysore students being available, others who have graduated from a College in Mysore may be chosen.

V. Candidates must have passed with credit a degree in Arts, Medicine or Engineering in an Indian University.

VI. Each candidate must forward with his application—

i. A satisfactory certificate of birth or domicile.

ii. A declaration that he has the consent of the head of his family to proceed to England, or elsewhere, for the purpose of this scholarship.

iii. Certificates of good character from two persons (not relations of the candidate) of respectability and good position, in addition to the one from the Head of the College where he was educated for the degree in Arts, Medicine or Engineering.

iv. A certificate of physical fitness to undergo the course of study or research which he will have to follow in England or elsewhere, signed by the Senior Surgeon of the Government of Mysore, or a Medical Officer not below the rank of a District Civil Surgeon.

v. A statement of the course of study or research which he desires to pursue, with testimonials as to his educational qualifications for such course.

VII. Applications shall be addressed to the Secretary to the Government of Mysore in the General and Revenue Department, and the selection of candidates will be made by the Government after the receipt of a report from a Committee appointed by the Government to report on the merits of the candidates.

VIII. Each candidate selected will be given travelling allowance, 2nd class rail and steamer fares, to England or elsewhere from Bangalore, and a similar allowance for travelling expenses back to Bangalore on the completion of his course of study or research. He will further be allowed during his stay in England or elsewhere outside India, a sum of £200 per annum, payable quarterly in advance, this allowance to be inclusive of College and examination fees, cost of books, instruments and boarding charges. If the Institution selected by Government for the prosecution by the candidate of his study or research is in India or Japan, the allowance will be Rs. 100 per mensem.

IX. The subjects which the scholarship-holder shall study will be one or more of the following :—

(1) Chemistry.

(2) Physics.

(3) Applications of Chemistry or Physics to agriculture and to the various Arts and Industries likely to be of greatest benefit to the Mysore Country—such as dyeing, the extraction, purification and testing of sandal and other indigenous oils; soap and candle-making; glass-making; paper-making; match-making; photo-mechanical printing, sugar-refining; tanning; textile industries.

(4) Medical research specially in hygiene and bacteriology.

(5) Mechanical Engineering

(6) Mining and Metallurgy, including electro-metallurgy.

X. Each candidate selected, unless otherwise directed by Government, shall, within such period as may be fixed by Government, proceed to England or elsewhere, and on arrival there present himself before Messrs. Coutts & Co., Strand, London, or any other person or persons named by Government, who will pay him the amount of the scholarship for the first quarter. He shall then without unnecessary delay proceed to and join the Institution selected or approved by Government for the purpose and there continue his study or research with all due diligence.

XI. The continuance of the scholarship to the holder will be strictly dependent on good conduct and will be conditional on satisfactory progress being made in his study or research as certified in a half-yearly report to be sent to Government by the Head of the Institution he attends. The stipend of the scholarship for each subsequent quarter will be paid only on a bill countersigned by the Head of the Institution and a certificate that the student is in regular attendance at the Institution and that his conduct and progress are satisfactory.

XII. The scholarship will be forfeited if the holder thereof—not being disabled by illness or prevented by any other cause which the Government may consider sufficient—fail to complete the course of study or research prescribed or is unfavourably reported on by the Head of the Institution. No return passage will in such case be paid.

XIII. A candidate selected shall, before proceeding to England or elsewhere, enter into a bond with the Mysore Government stipulating that he accepts the scholarship on the conditions specified in these rules, that he will prosecute the study or research with all due diligence; and that on completion of such study or research course he shall return to Mysore and shall, if called upon to do so, serve the Mysore Government for a period of not less than five years. If he fails to fulfil any of these conditions, he shall return to the Government the total amount received by him for passage money and scholarship.

XIV. The date within which applications shall be submitted and the subject or subjects of study and research selected annually by Government shall be notified in the Mysore Government Gazette not less than six months previously.

No. G. 5837, dated 26th May 1906.

The following list of Papers placed at the disposal of the Press is published for general information :—

No.	No. and date of Proceedings	Subject
1	Fl. 6250-94—Agri. 91-05-9, 22nd March 1906.	Prescribes certain limits and rules for admitting charges on account of Money Order commission.
2	R. 12251-60—R. M. 458-05-1, 23rd March 1906.	Calls for explanation regarding the inadequate return on the outlay made on certain works of irrigation.
3	R. 13020-8—L. R. 253-04-2, 7th April 1906.	Reviews the Revenue Administration Report for the year 1903-04.
4	No. 9684-5—Ed. 206-05-2, 19th March 1906.	Sanctioning additional cost to the Industrial School at Mysore during the year 1905-06.
5	No. 10152-91—Md. 212-05-2, 31st Mar. 1906.	Re-supply of Sera manufactured at the Central Institute at Kasauli.
6	No. 10254-6—Ed. 86-05-7, 2nd April 1906.	Revising the rules *re* grant of scholarship to widows.
7	No. 4327-9—Muz. F., 30th March 1906.	Sanctioning from State funds an expenditure of Rs. 1,557-9-1 incurred for feeding during the last *Mukkoti* and *Bramhotsava* festivals in His Highness the Maharaja's chattram at Tirupati and directing that a sum of Rs. 1,500 be annually provided in future in the Muzrai Budget for this purpose.
8	No. 4351-2—Muz. F., 2 of 94, 30th March 1906.	Fixing a scale of expenditure in the Sri Rameswara Devaru temple at Tirthahalli.

No. 12285—*Ml.* (319-05)-8, *dated* 28*th May* 1906.

Mr. Maragi Hanumanthappa, merchant, is appointed a member of the Anekal Town Municipal Board in place of Mr. Kasipathaiya, whose term of office as member expired on the 24th January 1904.

No. 11983 A.—*Ml.* (354-05)-8, *dated* 22*nd May* 1906.

Under Section 18 (1) of the Mysore City Improvement Regulation, No. III of 1903, it is hereby declared that the lands detailed in the annexed schedule which are in the City of Mysore are required for a public purpose, that is, for improving the sanitation of Ittigegud, Mysore, the project for which was sanctioned by Govt. in their Proceedings No. 11111-12—Ml. (354-05)-4, dated 27th April 1906 :—

Serial No.	Plan No.	Survey No.	Name of owner	Description of property	Extent in feet		Area in Sqr. yards	Boundaries			
					East to west	North to south		East	West	North	South
1	1/96	479	Ramaswamy Mudaliar ...	Land ... ... Thatched house, 3 ankanams Trees, etc.	150	18	300	Road ...	Dodkere ...	Passage ...	Akilandammal's house
2	96	479	Akilandammal ...	Land ... . Tiled house, 5 ankanams Tiled verandah, 5 ankanams Thatched house, 8 ankanams Well 1, trees, etc.	150	73½	1225	Do ...	Do ..	Ramaswamy Mudaliar's house.	Chinnammal's land and house.
3	2/96	479	Chinnammal ...	Land ... ... Thatched house, 2 ankanams Trees, etc.	150	18	300	Do ...	Do ...	Akilandammal's house..	Chengalvaraya Mudaliar's house.
4	3/96	479	Chengalvaraya Mudaliar ...	Land ... ... Thatched house 4 ankanams Mud wall 12 R.yds., trees, etc.	150	24	400	Do ..	Do ...	Chinnammal's house ...	Manikka Mudaliar's land.
5	1/85	480	A. Manikka Mudaliar ...	Land	126	118	1652	Do ..	Do ...	Chengalvaraya Mudaliar's house.	Vacant land.
6	a & b/94	...	Nagamma ...	Land ... ... Trees, etc.	89 106	12 24	401	Do .	Do ...	Vacant land and Krishnappa's land.	Krishnappa's and Trust land.
7	1/94	...	Krishnappa ...	Land ... ... Trees, etc.	101	40	449	Do ...	Do ...	Nagamma's land ...	Nagamma's land.
8	90	1/481	Muthammal, wife of Parasuram Mudaliar.	Land .. .. Trees, etc.	99	81	891	Do ..	Do ...	Trust land ...	Road across Dodkere.

Statement showing the lands required for a public purpose, etc.—*concld.*

Serial No.	Plan No.	Survey No.	Name of owner	Description of property	Extent in feet		Area in Sqr. yards	Boundaries			
					East to west	North to south		East	West	North	South
9	114	...	Sivananjiah ...	Land	33	58	243	Road ...	Subraya Mudaliar's land.	Road across Dodkere...	Balakrishna Mudaliar's and Narasimmaiya's lands.
				Tiled house, 5 ankanams Brick wall (42×1½×7½) 472 C.ft. Well 1, trees, etc.	16	17					
10	1/114	...	Janakiammal and Subraya Mudaliar.	Land	78	54	468	Sivananjaiya's house ...	Dodkere	Do ...	Narasimmaiya's land.
				Well 1, trees, etc.							
11	1/113	...	Narasimmaiya ...	Land	72	43	344	Siddalingaiya's land ...	Do ...	Sivananjaiya's land and house.	Srinivasamurthi Rao's land.
				Trees, well 1.							
12	2/113	..	Siddalingaiya ...	Land	13	17	336	Road ...	Narasimmaiya's land...	Balakrishna Mudaliar's land.	Do
				Cocoanut trees 6 Well 1	56	50					
13	113	...	Balakrishna Mudaeiar ...	Land	42	36	168	Do ...	Siddalingaiya's land ..	Sivananjaiya's land ...	Siddalingaiya's land.
				Trees, etc.							
14	1/112	...	Srinivasamurthi Rao ...	Land	146	104+126/2	1,866	Do ...	Dodkere ...	Siddalingaiya's and Narasimmaiya's lands.	Goljar Puttaiya's land.
				Cocoanut trees 5 Wells 2							
15	2/112	...	Gollar Puttaiya ...	Land	150	153	2,550	Do ...	Do ...	Srinivasamurthi Rao's land.	Kuppammal's land.
				Cocoanut trees 7 Other jungle trees 3 Pond, etc.							
16	3/112	..	Balasundara Mudaliar ...	Land	81	220	1,980	Kuppammal's and Puttaiya's lands.	Do ...	Do ...	Dodkere.
17	4/112	...	Kuppammal ...	Land	150	67	1,117	Road ...	Balasundara Mudaliar's land.	Puttaiya's land ...	Drain.
				Tiled verandah, 3 ankanams Thatched verandah, 5 ankanams Cocoanut trees 6 Other tress Brindavanam Well							

B

No. R. 14804—*L. R.* 628-05-5, *dated* 16*th May* 1906.

Under Section 6 of the Land Acquisition Regulation, No. VII of 1904, it is hereby declared that the lands described hereunder are required for a public purpose, *viz.*, for inclusion in the Sunka Tannur tank in the French Rocks Sub-Taluk; and under Sections 7 and 3 (*c*) of the said Regulation, the Assistant Commissioner in charge of French Rocks Division office is authorized to take orders for the acquisition of the said lands:—

District	Taluk	Hobli	Village	Name of Khatedars	Description of land: Survey No.	Description of land: Dry, wet or garden	Total extent (A. g.)	Assessment	Extent to be acquired (A. g.)	Boundaries: East	Boundaries: West	Boundaries: North	Boundaries: South	Remarks
Mysore	French Rocks Sub-Taluk	Melkote	Sunka Tannur	Chenna, Chikkanarasa and 5 others ...	283	Dry ...	5 8	4 0 0	1 0	Sunka Tannur tank and Survey No. 282.	Survey No. 284 ...	S. No. 278 ...	Bed of Sunka Tannur tank.	
				Betty, Rama	284	Do ...	4 24	3 8 0	0 20	S. No. 283 ...	S. No. 285 ...	S. No. 273 ...	Do	
				Government waste land ...	2-5	Waste ...	1 22	...	0 12	S. No. 281	S. Nos. 286 and 287 ..	S. No. 272 ...	Do	
				Betty Rama	282	Dry ...	1 33	1 4 0	0 32	S. No. 279 ...	S. No. 283 ...	S. No. 278 ...	Do and S. No. 281.	
				Kala, Chikka, Dolla	288	Do ...	6 16	5 0 0	1 0	Bed of tank ...	S. No. 269 ...	S. Nos. 286 and 287 .	S. Nos. 289 and 290.	
				Kempa, Devari, Putheri and Kalegowda..	289	Do ...	3 30	3 8 0	1 20	Do ..	S. No 290 ...	S. No. 288 ...	Bed of tank.	
				Kalegowda *alias* Kempaygowda ...	290	Do ...	5 10	4 8 0	0 28	S. No. 289 and tank ...	S. Nos. 291, 268 and 293.	S. Nos. 269 and 288 ..	Do	
				Thimma *alias* Thimarayee ...	293	Do ..	5 8	4 0 0	1 20	S. No. 290 ...	Kharab Halla ..	S. Nos. 291 and 292 ...	Do and S. No. 294.	
				Bora *alias* Chikkacharee ...	294	Do ...	0 37	0 12 0	0 37	Bed of tank ...	Do ...	S. No. 293 ...	Bed of tank.	
				Kulla	257	Do ...	2 31	2 8 0	1 0	Kharab Halla	S. Nos. 258 and 259 ...	S. No. 261 ...	S. Nos. 255, 256 and 295.	
				Kala Thimma, husband of Channee ...	256	Garden .	0 15	1 0 0	0 15	S. No. 257 ...	S. Nos. 255 and 257 ...	S. No. 257 ...	S. No. 255.	
				Kempegowda	255	Do ...	0 37	3 0 0	0 32	S. Nos. 295, 256 and 257.	S. No. 253	S. Nos. 257 and 256 ..	S. Nos. 254 and 300.	
				Rama, Chikka, Narasimha	253	Do .	0 19	1 8 0	0 19	S. No. 255 ...	S. No. 253 ...	S. No. 255 ...	S. No. 501.	
				Kala, Deva and others	253	Do ... / Dry ...	0 7 / 8 37	0 8 0 / 8 0 0	0 16	S. Nos. 254 and 255 ...	Koduguhalli out-post ..	S. No. 258	S. Nos. 252 and 247.	
				Kulla	259	Do ...	6 35	6 0 0	0 12	S. Nos. 261 and 257 ...	S. No. 260 ..	S. No. 261 ...	S. No. 258.	
				Thimmagowda	251	Gardn ...	0 23	2 0 0	0 12	S. No. 301 ...	S. No. 252 ...	S. No. 252 ...	S. Nos. 250 and 304.	
				Devegowda	303	Do ...	0 9	0 8 0	0 6	S. No. 306 ...	S. No. 304 ...	S. No. 301 ...	S. No. 306.	
				Do	248	Do ...	0 13	1 0 0	0 4	S. No. 249 ..	S. No. 247 ...	S. No. 247 ...	S. No. 246.	sites to be given to them in exchange for theirs.

566

Mysore	French Rocks Sub-Taluk	Melkote	Sunka Tannur	Thimma and others	247	Dry ..	3 25	3 0 0	0 4	S. Nos. 248, 246 and 250.	Kodagihalli out-post .	S. Nos. 253 and 252 ...	S. No. 246, 248 and 249.	These are willing to remove their sheds and build on other
				Devagowda, Kala	249	Do ...	0 10	0 12 0	0 10	S. No. 250 ...	S. Nos. 248 and 246 ...	S. No. 247 ...	S. No. 246.	
				Gowdagowda	250	Do ...	0 32	2 4 0	0 32	S. Nos. 304 and 305 ...	S. Nos. 247 and 249 ...	S. No. 251 ...	S. Nos. 246 and 305.	
				Do	246	Do ...	7 34	7 0 0	1 20	S. No. 309 ...	Kodagihalli out-post ...	S. Nos. 247, 248 and 249.	S. Nos. 313. 245.	
				Do Thimmarayee and Kempa ..	305	Garden	0 21	1 8 0	0 21	S. Nos 306 and 308 .	S. Nos. 350 and 246 ..	S. No. 304 ...	S. No. 309.	
				Gowdagowda	309	Dry .	3 1	3 8 0	3 1	S. Nos. 308, 301 and bed of tank.	S. No. 248 ...	S. Nos. 307, 308 and 305.	S. Nos. 310 and 313.	
				Seshamma	313	Do ...	2 8	2 8 0	1 0	S. Nos. 311 and 310 ...	S. No. 245 ...	S. Nos. 246 and 309 .	S. Nos. 318, 314 and 315.	
				Gowdagwoda	311	Do ...	0 10	0 4 0	0 8	S. No. 310 .	S. No. 313 ...	S. No. 310 .	S. No. 312.	
				Seshamma	310	Do ...	1 15	1 8 0	1 0	Bed of tank .	S. Nos. 309 and 313 ...	S No. 309	S. No. [illegible] and tank bed.	
				Betty Rama . ..	307	Do .	1 12	1 8 0	1 12	Do ...	S. No. 308 ...	S. No. 306 ...	S. No. 309 and tank bed.	
				Venkatasetty	306	Garden Dry ...	0 4 1 17	0 4 0 1 8 0	0 4	Do ...	S. No. 305 ...	S. Nos. 298, 301 and 302.	S. Nos. 308 and 307.	
				Sarcar (Government)	331	Kharab ...	0 8	...	0 4	S. No. 332 ...	S. No. 330 ...	Tank ...	S. No. 330.	
				Betty Rama, Kulla	332	Dry ..	4 2	3 8 0	1 30	S. Nos. 334 and 333 ...	S. Nos. 330 and 331 ...	Do ...	Village and village site.	
				Bommanagowda	333	Do ...	0 23	0 8 0	0 12	Village ...	S. No. 332 ...	S. No. 334 ...	Village.	
				Masty Kulla, Veera and others ...	334	Do .	1 39	1 12 0	1 0	Tank . .	S. No. 332 ...	Tank ...	S. No. 333 and village.	
				Kallagowda	295	Do ...	0 21	0 8 0	0 21	Halla ...	S. No. 255 ...	S. No 257 ...	S. Nos. 269 and 299.	
				Devegowda	296	Garden ...	0 20	1 0 0	0 20	Tank of Halla ..	S. No. 297 ...	S. No. 295 ...	S. No. 297.	
				Kulla	297	Do ...	0 39	2 0 0	0 39	Tank ...	S. Nos. 298 and 299 ...	S. No. 296 ...	Tank.	
				Thimmegowda	298	Do ...	0 19	1 0 0	0 19	S. No. 297 ...	S. No. 301 ...	S. Nos. 299 and 300 ...	Do and S. No. 306.	
				Karya Lakshma	299	Do ...	0 15	0 2 0	0 15	S. Nos. 296 and 297 ...	S. No. 300 ...	S. No. 295 ...	S. No. 298.	
				Kalegowda	300	Do ...	0 18	1 4 0	0 18	S. No. 299 ...	S. No. 302 ...	S. No. 255 ..	S. No. 30[illegible].	
				Kempa Davare and Patture ...	301	Do ...	0 13	1 0 0	0 13	S. No. 298 ...	S. No. 302 ..	S. No. 300 ...	S. No. 306.	
				Linga, Kulla and others	302	Do ...	0 26	2 4 0	0 26	S. Nos. 300 and 301 ...	S. Nos. 251 and 252 ...	S. No. 254 ...	S. No. 303.	
				Kalla and others	304	Do ...	0 11	0 12 0	0 11	S. No. 303 ...	S. No. 250 ...	S. No. 251 ...	S. No. 305.	
				Betty Ramma	308	Do ...	0 22	1 4 0	0 22	S. No. 307 ...	S. Nos. 309 and 305. ...	S. No. 306 ...	S. No. 309.	
				Kallegowda and Earaygowda and others.		Building sites				Bed of tank ...	Village ...	S. No. 334 ...	S. No. 115.	

No. R. 14387—*L. R.* 652-05-3, *dated 9th May* 1906.

Under Section 6 of the Land Acquisition Regulation, No. VII of 1894, it is hereby declared that the land described hereunder is required for a public purpose, *viz.*, for the construction of a Forest lodge; and under Sections 7 and 3 (*c*) of the said Regulation, the Assistant Commissioner in charge of Honnali group of taluks is authorized to take order for the acquisition of the said land :—

District	Taluk	Village	Name of khatedar	Survey No.	Dry, wet or garden	Total extent	Assessment	Extent now required	Boundaries			
									East	West	North	South
						A. g.	Rs. a. p.	A. g.				
Shimoga	Shikarpur	Kallamane	Siddanna, son of Sivanna	173	Dry ...	2 24	4 8 0	2 24	Survey No. 1 and the village site	Survey No. 172	Survey Nos. 3 & 4	Survey No. 174 and the village site.
					Wet ...	1 33						
					Total extent.	4 17						

No. R. 14541—*L. R.* 666-05-3, *dated 11th May* 1906.

Under Section 6 of the Land Acquisition Regulation, No. VII of 1894, it is hereby declared that the land described hereunder is required for a public purpose, *viz.*, for improving the Honnali-Basavapatna road; and under Sections 7 and 3 (*c*) of the said Regulation, the Assistant Commissioner in charge of Honnali group of taluks is authorized to take order for the acquisition of the said land :—

District—Shimoga.
Taluk—Honnali.
Village—Benakanahalli.
Name of khatedar—Savantrava, wife of Bhima.
Survey No.— 74.
Dry, wet or garden—Dry.
Total extent—8 acres and 38 guntas.
Assessment—Rs. 3-8-0.
Extent required—20 guntas.
Boundaries—
East—Survey No. 73.
West—Survey No. 75.
North—Survey No. 43.
South—Survey No. 77.

No. R. 14577—*L. R.* 661-05-3, *dated 11th May* 1906.

Under Section 6 of the Land Acquisition Regulation, No. VII of 1894, it is hereby declared that the lands described hereunder are required for a public purpose, *viz.*, for opening a relieving weir channel to the Gondi channel, Kadur Taluk; and under Sections 7 and 3 (*c*) of the said Regulation, the Assistant Commissioner in charge of the Tarikere group of taluks is authorized to take order for the acquisition of the said lands:—

District	Taluk	Hobli	Village	Name of khatedar	Survey No.	Dry, wet or garden	Total extent	Assessment	Extent required	Boundaries			
										East	West	North	South
							A. g.	Rs. a. p.	A. g.				
Kadur	Kadur	Kadur	Malleswara	Gullappa *bin* Jakanachari.	161	Wet ..	3 15	9 0 0	0 20	S. No. 162	S. No. 161	Channel kodi and S. No. 161	S. No. 161
				Shambhatta *bin* Krishna Sastri.	162	Do ..	2 27	7 0 0	0 10	Do	S. No. 162	S. No. 162	S. No. 162

No. R. 14788—*L. R.* 667-05-3, *dated 13th May* 1906.

Under Section 6 of the Land Acquisition Regulation, No. VII of 1894, it is hereby declared that the land described hereunder is required for a public purpose, *viz.*, for building houses; and under Sections 7 and 3 (*c*) of the said Regulation, the Assistant Commissioner in charge of the Hunsur group of taluks is authorized to take order for the acquisition of the said land :—

District—Mysore.
Taluk—Heggaddevankote.
Hobli —Kasaba.
Village—Yelehundi.
Name of khatedar—Subba Rao.
Survey No.—$\frac{2}{2}$.
Dry, wet or garden—Dry.
Total extent—4 acres and 1 gunta.
Assessment—Rs. 2 and annas 4.
Extent now required—4 acres and 1 gunta.
Boundaries —
East—Road.
West—Survey Nos. 3 and 8.
North— Do Nos. 10 and 11.
South— Do No. 1 and village.

CIVIL APPOINTMENTS.

Heads of Departments and all other officers concerned are informed that Notifications in the Gazette are in future to be accepted as disposing of all references regarding leave, transfers, appointments, powers and other personal questions affecting Gazetted officers, as to which orders are gazetted by the Government in this Part of the Gazette, and that any subsidiary orders as to relief of their subordinates and the like, which such notifications necessitate, must be issued by them on receipt of the Gazette, as no other orders will be issued by Government.

No. R. 15211—*L. R.* 646-05-4, *dated* 26*th May* 1906.

The two weeks' privilege leave granted to Mr. V. Krishna Rao, Acting Extra Assistant Commissioner, in Notification No. R. 14063—L. R. 646-05-2, dated the 1st May 1906, having been availed of from the 4th to the 11th idem (both days inclusive), the unused portion thereof is hereby cancelled.

No. 12013—*Med.* (52-05)-36, *dated* 21*st*—25*th May* 1906.

The following transfers of Sub-Assistant Surgeons are ordered in the interests of the public service :—

No.	Rank	Name	From	To	Remarks
1	Sub-Assistant Surgeon.	Mr. J. Wesley ...	Imperial Service Regimental Hospital, Bangalore.	Public Works Dispensary, Sivasamudram.	To join on relief by Mr. S. Ranganna, Assistant Surgeon.
2	Do ...	Mr. J. V. Mascarenhas	Public Works Dispensary, Sivasamudram.	Imperial Service Regimental Hospital, Bangalore.	To join on relief without delay.

2. Mr. S. Ranganna, Assistant Surgeon, doing duty in the Victoria Hospital at Bangalore, will, in addition to his duties, remain in charge of the Imperial Service Regimental Hospital at Bangalore till Mr. J. V. Mascarenhas, Sub-Assistant Surgeon, joins from Sivasamudram.

No. R. 15178—*L. R.* 427-05-4, *dated* 25*th May* 1906.

Mr. S. N. Appanniengar, B.A., B.L., Revenue Probationer, is appointed to act as Amildar and 3rd Class Magistrate of the Devanhalli Taluk, during the employment of Mr. T. Dharmaraj Chetty on other duty, or until further orders.

The Petition Box kept at the Office of the General and Revenue Secretariat, Bangalore, will be cleared at 12 noon every day by the Secretary to Government, General and Revenue Department, and in his absence from Bangalore, by the Deputy Secretary.

By Order,

B. K. VENKATA VARADA IYENGAR,

Secy. to Govt., Gen. & Rev. Dept.

The Mysore Gazette.

Vol. 41.] PUBLISHED BY AUTHORITY. [No. 22.

BANGALORE, THURSDAY, MAY 31, 1906.

PART II.

Notifications by Govt. of India, Resident, Chief Court, &c.

FOREST DEPARTMENT.

Abstract Notice, dated 14th May 1906.

Attention of the public is invited to the notification published on page 778 of Part II of the *Mysore Gazette* dated the 17th May 1906, regarding the sales of minor forest products in the depots of the Hassan District.

Y. SITARAMAIYA,
District Forest Officer, Hassan.

POLICE DEPARTMENT.

Dated 7th May 1906.

Descriptive roll of a woman named Sannamma, wife of Subbaiya *bin* Narnappa, who disappeared from her house at Honnemaradu, within the limits of Talaguppa Station of the Sagar Taluk :—

Name of Taluk—Sagar.
Name—Sannamma.
Caste—Havik Brahman.
Residence—Honnemaradu.
Height—Five feet, three inches.
Age—Twenty-six or twenty-seven years.
Complexion—Dark brown.
Descriptive marks—Round face, the two middle *incisors* of the upper jaw are fallen.
Any information about the person may be kindly communicated to the undersigned.

M. S. NARAYAN RAO,
for *Supt. of Police.*

Dated 25th May 1906.

Descriptive roll of a person named Krishnappa, who died unclaimed in the Hospital at Santhe Sargur in Heggaddevankote Taluk on 8th May 1906 at 9-30 P. M. :—

Name	Krishnappa.
Caste	Nayar.
Age	About 45 years.
Residence	Palghat.
Height	5 feet, 6 inches.
Colour	Brown.

Marks of identification and other particulars :—

The deceased had a long face and nose and holes in the lobes of both ears. Tuft of hair on his head. A dupti of 9 cubits long and a check coat were found near him. It is ascertained that the deceased was living upon the profession of sawing trees in the village.

Dated 25th May 1906.

Descriptive roll of a person found dead on 11th May 1906 at the 5th furlong of the 8⅕th mile stone in Mysore-T.-Narsipur road :—

Name	Not known.
Residence	Do
Age	About 25 years.
Caste	Holeyar.
Height	5 feet, 5 inches.
Face	Long.

The deceased had a tuft of hair and beard unshaved. Pieces of kambli, red kerchief were found near him and were destroyed. People of Mellahalli and Harovalli stated that the deceased was for about 7 or 8 days previous to his death seen begging in their village somewhat mad and sickly.

Dated 23rd May 1906.

Descriptive roll of a person found dead on 10th April 1906 under a tamarind tree near the Madeswara temple of Kittoor village, Sargur station limits, Heggaddevankote Taluk :—

Name	Not known.
Sex	Male.
Caste	Holeyar.
Residence	Not known.
Age ...	About 40 years.
Height	5 feet, 4 inches.
Complexion	ಕೆಂಚಬಣ್ಣ.
Description	Round face; tuft of hair on the head; face, stomach and legs swollen.
Property found	A red thread string containing 24 Rudrakshi and 23 white stones. One brass dish. Re. 0-1-6 in cash. One pot. A torn out kambli. A bamboo vessel. ಅಂಡೆ.

MAHOMED JAFFER,
Supt. of Police, Mysore Dt.

MISCELLANEOUS.

BANGALORE DISTRICT.

Notice dated 19th May 1906.

The public are hereby informed that on and after the 21st May 1906, the office of the Sub-Registrar of Bangalore will be held in Mr. Abdul Karim's bungalow opposite to the Reserve Police Lines, Fort, Bangalore.

It is hereby notified that the undermentioned Kayamgutta village will be sold by public auction on account of arrears of revenue due to Government at Halesampigehalli at 11 A.M., on the 26th June 1906. Halesampigehalli, Jigani hobli, Anekal Taluk, Bangalore District.

For further particulars, see page 803, Part II of the *Mysore Gazette*, dated 24th May 1906.

It is hereby notified that the undermentioned Kayamgutta village will be sold by public auction on account of arrears of revenue due to Government at Lakshmipura at 11 A.M., on the 25th June 1906. Lakshmipura, Jigani hobli, Anekal Taluk, Bangalore District.

For further particulars, see page 802, Part II of the *Mysore Gazette*, dated 24th May 1906.

Notification dated 19th April 1906.

It is hereby notified that in satisfaction of arrears of land revenue due by the Inamdars of Jodi Narayanapura village in the Nelamangala Taluk for the year 1905-06, the said Jodi village of Narayanapura will be sold by public auction at Nelamanagla Taluk office on the 25th June 1906.

For further particulars, see Notification dated 19th April 1906, published in the *Mysore Gazette*, Part II, page 801.

D. DEVARAJ URS,
Dy. Comr.

S 72

ADVERTISEMENT.

Dated 18th May 1906.

Wanted a graduate with fair knowledge of Kanarese for the temporary vacancy of an Anglo-Vernacular clerk on Rs. 25 in the Closepet Assistant Commissioner's office. The place is likely to become permanent.

Applications will be received up to the end of May 1906.

ANANDA RAO, SIRSI,
Asst. Commr., Closepet Range.

KOLAR DISTRICT.

IN THE COURT OF THE ASSISTANT COMMISSIONER AND 1st CLASS MAGISTRATE, KOLAR GOLD FIELDS.

Notice is hereby given that the sale proceeds (Rs. 2-12-0) of rice found in the Robertsonpet market on 1st February 1906 and produced by Robertsonpet Police with Property Form No. 39, dated 6th February 1906, and sold by order of Court, will be confiscated to Government, if not claimed within six months from this date.

Dated 9th May 1906.

Notice is hereby given that the marginally noted stamp paper produced by Robertsonpet Police, with Property Form No. 47, dated 3rd May 1906, will be confiscated to Government, if not claimed within six months from this date.

A stamp paper of eight annas value bearing No. 476, dated 11th April 1905, issued in the name of one Rayappan of Marikuppam Camp and found in the Robertsonpet Market by the Market Sergeant on 17th April 1904.

Dated 9th May 1906.

Notice is hereby given that certain monies, *viz.*, Rs. 985-3-6, seized by the Police at the Jolarpet Railway Station on 22nd January 1905 on the person of one Varadan and produced in C. C. 389 of 1904-05 on the file of this Court, will be confiscated to Government if not claimed within six months from this date.

R. B. PLUMER,
Asst. Comr. & 1st Class Magte.

PROCEEDINGS OF AN ORDINARY MEETING OF THE SANITARY BOARD, KOLAR GOLD FIELDS, HELD ON FRIDAY THE 4TH MAY 1906.

PRESENT.

Ex-officio Members.

1. C. Srikantesvara Iyer, Esq., B.A., B.L., Offg. President, Sanitary Board.
2. R. B. Plumer, Esq., Vice-President.
3. R. Bocquet, Esq., Offg. Chief Inspector of Mines.
4. R. J. M. Mayne, Esq., Acting District Superintendent of Police.

Non-official Members.

1. Dr. J. D. O'Donnell, Acting Chief Medical Officer of the Mining Boards.
2. Col. F. E. Piercey, Superintendent, Champion Reef Co.
3. R. H. P. Bullen, Esq., Superintendent, Ooregum Mine.
4. C. H. Richards, Esq., Superintendent, Coromandel Co.

ABSENT.

Ex-officio Members.

1. K. Krishna Iyengar, Esq., Executive Engineer, Kolar Division.
2. E. S. Krishnaswami Iyer, Esq., District Medical and Sanitary Officer.

Non-official Members.

1. P. Bosworth Smith, Esq., Superintendent, Tank Block Co.
2. A. Gifford, Esq., Superintendent, Mysore Mines.

1. Read and confirmed the minutes of the last meeting.

2. Read and recorded, audited accounts received from the Comptroller for the months of November and December 1905, and January 1906.

3. List of works over Rs. 200, put in hand in anticipation of Board's sanction, read and sanction to the works accorded.

4. Read and recorded, statement of progress of work up to end of April 1906.

5. Read letter dated 10th April 1906, from the Honorary Secretary, Kolar Gold Fields Club, Golf Section, requesting the Board to contribute to the expense incurred by the Golf

Club, in reconstructing a Brown and a putting ground, in place of ones destroyed by the construction of the new Church road.

Resolved that the Board bear the cost of the construction of the Brown to the extent of Rs. 40, but not of the putting ground, which was already in disuse and out of repair.

6. Read Government Proceedings No. 9437-45—L. F. (332-05)-2, dated 14th March 1906, sanctioning the budget estimate for 1906-07.

Resolved that the Government be again requested to accord sanction to the entertainment of a competent accountant, and to the proposed increase in the salary of the existing clerks.

7. Read Government Proceedings No. 9592—Med. 195-05, dated 16th March 1906, requesting the Deputy Commissioner and President to submit in consultation with the Board his suggestions for improvements in the administration of measures for the treatment of small-pox and other epidemic diseases on the Fields.

Read also Government Proceedings No. 3049-68—Leg. 21-05, dated 1st May 1906, regarding the introduction of compulsory vaccination on the Fields.

Resolved that the Deputy Commissioner and President do inform Government that some of the observations regarding certain short comings, are based on somewhat incomplete or not quite accurate information, *e. g.*:—

The registration of births and deaths on the Field is being particularly carefully attended to; all the patels are supplied with registers and maintain them, the compulsory notifying of epidemic diseases is vigorously enforced, and well understood by the people, and all detected cases of non-compliance with the rule are prosecuted, over twenty in the last three months being so prosecuted, and convictions attained in the majority of such instances; that the Board concurring with the Senior Surgeon and Sanitary Commissioner, in thinking that the services of an Assistant Sanitary Inspector are desirable, request sanction for the entertainment of one on a salary of Rs. 75 rising to Rs. 100, by yearly increment of Rs. 5 the first year, and Rs. 10 the two following years; that the Board approve of the proposal to convert the Rent collectors into Assistant Sanitary Overseers, with an increased pay of Rs. 5 each, and with the additional work of acting as Headman of the various cooly colonies, with the fixed registry office in each, to be opened daily at fixed hours; and finally that the Board consider the introduction of compulsory vaccination and re-vaccination within the Sanitary Board area, to be a measure of the greatest importance and protective value to the Gold Mining Industry, and therefore request, this being declared compulsory, within the Sanitary Board area.

The question of a Health Officer is an important one, which requires, and will receive, further consideration.

8. Read Superintending Engineer's docket No. 2104, dated 24th April 1906, regarding the lighting of certain roads on the Field, by electric light.

Resolved that the Superintending Engineer be informed that Plumer road may be omitted, and that the other roads named in his letter under reply, comprise all the roads, that the Board are ever likely to want lit by electricity.

R. B. PLUMER,
for *Presdt., Sany. Board,*
Kolar Gold Fields.

TUMKUR DISTRICT.

Notice dated 24th May 1906.

The attention of the public is invited to the notification of this department issued under the date 13th May 1906, regarding the sale of tangadi and kakke barks in the several taluks of the Tumkur District for 1906-08, published at page 777, Part II of the *Mysore Gazette*, dated 17th May 1906.

H. RAMIAH,
for *Dy. Comr.*,

Abstract Notification dated 15*th May* 1906.

The President of the Tumkur Town Municipal Board hereby invites tenders for the right to collect tolls at the rate of two annas per cart laden with goods and one anna per empty cart from 1st July 1906 to 30th June 1907.

2. The tenders should be addressed to the President of the Municipal Board of Tumkur. They will be opened by the President or the Vice-President in the District Office at 3-30 P.M. on the 12th June 1906.

3. For further particulars see original Notification published at pages 804-805 of the *Mysore Gazette* of the 24th May 1906.

K. DORASAMI IYER,
President.

MYSORE DISTRICT.

Abstract Notification dated 2nd May 1906.

It is hereby notified that Sarvamanya Machavalalu, Akkihebbalu hobli, Krishnarajpete Taluk, will be sold by public auction in the office of the Amildar of the Taluk on the 28th June 1906 on account of arrears of revenue due to Government.

For further particulars see page 782 of Part II of *Mysore Gazette* No. 20, dated 17th May 1906.

C. KRISHNA RAO,
for *Dy. Comr.*

Notification dated 17th May 1906.

It is hereby notified for the information of the public, that, under the authority conveyed in Government Order No. 11423—L. B. (367-05)-4 of the 5th May 1906, the toll-gate at Panchavalli in the Hunsur Taluk will be shifted to Allurkatte from the 1st July 1906.

H. H. SPARKES,
President, Dist. Board.

HASSAN DISTRICT.

Abstract Notification dated 16th May 1906.

It is hereby notified for general information that the right of collecting tolls on the Belur bridge in the Hassan District for one year from 1st July 1906 to 30th June 1907, will be sold by public auction at the Belur Taluk Cutcherry at noon on Thursday the 31st May 1906, by the Senior Assistant Commissioner, Saklespur.

For further particulars, see original notification published at page 807 and 808 of the *Mysore Gazettes* dated 24th May 1906.

It is hereby notified for general information that the right of collecting tolls at the Marnahalli Ghat, Manjarabad Taluk, in the Hassan District, for twelve months from 1st July 1906 to 30th June 1907, will be sold by public auction at the Taluk Cutcherry at Saklespur at noon on Saturday the 2nd June 1906, by the Senior Assistant Commissioner, Saklespur.

For further particulars, see original notification published at page 805 and 806 of the *Mysore Gazettes* dated 24th May 1906.

M. A. NARAYANA IYENGAR,
for *Dy. Comr.*

SHIMOGA DISTRICT.

Abstract Notification dated 18th May 1906.

It is hereby notified for general information that the right of collecting tolls on carts entering the limits of the Shimoga town Municipality from 1st July 1906 to 30th June 1907 is to be sold by public auction in the office of the President, Shimoga Board, by the President of the Shimoga town Municipality or the Vice-President deputed for the purpose at noon on the 12th June 1906.

For further particulars see original notification published at pages 808 and 809 of the *Mysore Gazette,* dated 24th May 1906.

M. S. NARAYAN RAO,
President.

KADUR DISTRICT.

Abstract Notification dated 10th May 1906.

The right of collecting fees at the weekly markets in the Municipalities of Chikmagalur, Tarikere and Yedahalli and in the Sakrepatna Union for the official year 1906-07, *i.e,* from 1st July 1906 to the 30th June 1907, will be sold by public auction by the Vice-President of the Chikmagalur Municipality and the Amildar of Tarikere, the Deputy Amildar of Yedahalli and the Amildar, respectively, at their offices at 11 A.M. on Monday the 11th June 1906.

N. B.—For further particulars *vide* Notification dated 10th May 1906, published at pages 809, Part II of the *Mysore Gazette,* dated 24th May 1906.

M. CHENGIAH CHETTY,
President, Local Fund Board.

Abstract Notification dated 12th May 1906.

It is hereby notified that the Jodi Lakshmisagar village in the Sivane hobli of the Tarikere Taluk will be sold by public auction in the office of the Amildar of the Tarikere Taluk on 27th June 1906 on account of arrears of jodi due by Dod Devarappa.

For further particulars, see page 810 of the *Mysore Gazette,* dated 24th May 1906.

V. KRISHNA RAO,
for *Dy. Comr.*

CHITALDRUG DISTRICT.

Notification dated 19th May 1906.

1. The right to collect tolls at the several gates in the Davangere Municipality from 1st July 1906 to 30th June 1907 will be sold by public auction in the Assistant Commissioner's Office at Davangere, by the Assistant Commissioner in charge of the Davangere group of taluks on the 12th June 1906.

2. The successful purchaser must collect tolls only at the rates noted in the annexed schedule and at no higher rates on the empty and laden carts that would pass through the toll gates from outside the limits of the Municipality.

3. The President reserves to himself the power of refusing or accepting the highest or any bid that may be offered without assigning any reason therefor.

4. The contract amount is payable in twelve monthly instalments due on or before the 10th of the following month. The contractor shall pay as soon as the sale is over, a deposit equal to two month's instalments for the due performance of the contract. He shall also furnish security for the regular payment of the monthly instalments.

5. If the deposit is not made and security is not furnished immediately after the close of the sale, the contract will be resold at the risk of the approved bidder. If default is made in the payment of instalments, interest at one pie per rupee per month will be levied till the date of payment and the contract will also be liable to be sold again at the discretion of the President and the deficit, if any, will be recovered from the contractor or his surety.

6. The contractor is also bound to keep an account showing the daily collections and it shall be open to inspection by Taluk and District authorities.

7. He shall also be bound to keep true accounts of traffic passing through the gates as specified in para 6.

8. The contractor will have the use of existing toll houses and gates and he will be required to keep them in good repair.

9. The contractor should conform generally to the rules published with the late Chief Commissioner's Notification No. 274, dated 4th November 1876, regarding the levy of tolls.

10. Any breach of the above rules on the part of the contractor or his servants will entail the cancellation of the contract.

SCHEDULE.

	Rs.	a.	p.
On every laden cart or carriage ...	... 0	2	0
Do empty cart or carriage ...	... 0	1	0

H. RAMANUJIENGAR, *President.*

TUMKUR DIVISION.

Notification dated 5th May 1906.

Rupees 150 (one hundred and fifty only) due to contractor Ranganna on account of earnest money deposited by him for restoring Chikmalur tank has been outstanding in the accounts of this office since July 1905. It is hereby notified that if the party does not present himself in the Executive Engineer's office at Tumkur to receive payment within a period of one month from the date of publication of this notification, the amount will be credited to Government as unclaimed deposits.

C. MADAVA RAO, *Executive Engineer.*

MYSORE DIVISION.

Notice is hereby given that sealed tenders will be received at the office of the Executive Engineer, Mysore Division, up to 15th June 1906, for restoring Kagalwadi tank, Registered No. 48, Chamrajnagar Taluk. An approximate estimate of quantities is given below. These quantities are not guaranteed. The work should be completed by the end of March 1907.

2. The plans, detailed estimate and conditions may be seen at the Executive Engineer's office at Mysore between the hours of 11 A.M. and 5 P.M.

3. Tenders should be submitted on printed forms which may be obtained from the Executive Engineer. The tenders should be accompanied by a statement in the form given below, showing the rates at which the different items specified will be executed.

4. Each tender must be accompanied by a deposit of Rs. 300 in cash or Government Promissory Notes, as earnest money, and be superscribed "Tender for restoring Kagalwadi tank, Registered No. 48, Chamrajnagar"; in default of which, tenders will be rejected.

5. The final acceptance of any tender will rest with the Superintending Engineer, who does not bind himself to accept the lowest or any tender or to assign any reason whatever for the rejection of any tender.

6. Within eight days of the acceptance of the tender, the successful competitor will be required to execute the usual contract bond; in default of which, his tender will be considered cancelled, and his earnest money will be forfeited.

7. The name of the successful competitor, whose tender has been accepted, will be posted on the notice board in the Executive Engineer's office in due course. No enquiries regarding the acceptance or rejection of a tender will receive any reply.

8. On acceptance of one of the tenders, the earnest money on rejected tenders will be returned.

Estimate for repairing the damaged portion of Kagalwadi tank, Registered No. 48, Chamrâjnagar Taluk.

Items of work	Per	Quantity
Bund R. L. 56·00—		
Earthwork	C. yd.	2,826
Turfing	S. yd.	12,958
Rough stone work, new	C. yd.	2,308
Old rough stone with fresh jelly...	"	659
Gravel backing	"	743
Gravel to top of bund	"	540
Waste-weir No. 1—		
Burnt brick in surki mortar	C. ft.	1,827
Burnt stone slabs (old)	S. ft.	522
Rough stone work, new	C. yd.	481
Do do old	"	524
Rough stone new, jelly packing	"	389
Waste-weir No. 2—		
Burnt brick in surki mortar	C. ft.	232
Burnt stone slabs, old	S. ft.	93
Rough stone work, new	C. yd.	117
Do do old	"	83
Waste-weir No. 3—		
Burnt brick in surki mortar	C. ft.	232
Burnt stone slabs, old	S. ft.	93
Rough stone work, new	C. yd.	84
Do do old	"	100

V. V. KARVE, for *Executive Engineer.*

BANGALORE CITY MUNICIPALITY.

Notice dated 17th May 1906.

Tenders are invited for the right of collecting tolls on vehicles and animals entering the City at the toll gates noted in the margin, (subject to the provisions contained in Sections 49 and 51 of the Municipal Regulations) at 3 P.M., on Saturday the 9th June 1906 at the City Municipal Office, District Office road. The tenders should specify the amount tendered for every one of the toll gates separately and should be accompanied by a deposit of Rs. 50.

1. Mysore road toll gate.
2. Magadi do
3. Subedar Chattram road toll gate.
4. Bellary road toll gate.
5. Hosur do
6. Upparahalli cart-track toll gate.
7. Kankanhalli road toll gate.

2. The lease will cover a period of one year commencing from the 1st July 1906 and ending on the 30th June 1907 and will be separately given for every one of the toll gates.

3. The contractors who purchase the right must collect tolls at the rates mentioned in the schedule annexed on in-coming traffic only and at no higher rates, and shall be bound to furnish receipts in the form prescribed by the President, duly dated, to the parties paying tolls.

4. The President reserves to himself the power of refusing or accepting the highest or any tender that may be offered.

5. The approved tenderer shall be required to execute a contract bond within seven days of acceptance of tender, and to make a further deposit making the total deposit amount to two months' instalments.

6. When such deposits shall not be made, or when the bidder fails to execute the contract bond within the time fixed, or when he fails to make payment of the monthly instalment, the contract shall be re-sold at the expense and risk of the first purchaser, who shall, however, be not permitted to claim any profit arising from such re-sale, and the deposits made by him forfeited.

7. The amount of tender that will be accepted will be payable in twelve monthly instalments, each instalment being paid before the 15th of the month for which it is due; the deposit made by the contractor being held over as a guarantee for the due fulfilment of the contract and returnable after a month after the expiry of the contract.

8. The contractors are also bound to keep an account showing the daily collections, etc., in the form specified by the President, and it shall be submitted by the contractors together with counterfoils of receipts granted by them every month for the inspection of the President, and shall also be open to inspection by the Municipal authorities.

9. They shall also be bound to keep true account of traffic passing through the gates as specified in para 8, for which purpose they shall bind themselves to maintain at their own cost a resident mutsaddi at each toll gate.

10. The contractors will have the use of existing toll-houses and gates, and they will be required to keep them in good order.

11. No tolls will be levied on the following :—

(1) Vehicles bearing Municipal numbers either of City or of Civil and Military Station or possessing passes of the City Municipality and on carriages or carts, and animals, the property of, or employed by Government or the Municipal Commission or licensed or registered by the said Commission ; and no more than one payment of toll shall be demanded for, and in respect of, any carriage or cart or animal, in any one period of twenty-four hours counted from midnight to midnight.

(2) All vehicles and animals used for the passage of Troops and Military or Government Stores and equipages on their march, or of Military, Civil or Police Officers on duty, or of any person or property in their custody.

12. Further particulars may be had on enquiry at the City Municipal Office, District Office road :—

SCHEDULE.

		Rs.	as.	p.
On every	four-wheeled carriage on springs	0	4	0
Do	two-wheeled do	0	2	0
Do	hackney or cart drawn by men, bulls, bullocks, horses, asses or mules, laden	0	2	0
Do	do not laden	0	1	0
Do	buffalo, bull or bullock laden	0	0	6
Do	horse over thirteen hands, laden or ridden	0	1	0
Do	horse of or under thirteen hands, laden or ridden ...	0	0	6
Do	horse over thirteen hands, not laden or ridden ...	0	0	6
Do	elephant	0	8	0
Do	camel	0	1	0
Do	bicycle or tricycle	0	1	0

Notice dated 17th May 1906.

Tumkur road toll gate near the entrance to Munireddipalyam.

Tenders are invited for the right of collecting tolls on vehicles and animals entering the City and Civil and Military Station at the toll gate noted in the margin, (subject to the provisions contained in Sections 49 and 51 of the Municipal Regulations) at 4 P. M., on Saturday the 9th June 1906 at the City Municipal Office, District Office road. The tender should be accompanied by a deposit of Rs. 50.

2. The lease will cover a period of one year commencing from the 1st July 1906 and ending on the 30th June 1907.

3. The contractors who purchase the right must collect tolls at the rates mentioned in the schedule annexed on in-coming traffic only and at no higher rates, and shall be bound to furnish receipts in the form prescribed by the President, duly dated, to the parties paying tolls.

4. The President reserves to himself the power of refusing or accepting the highest or any tender that may be offered.

5. The approved tenderer shall be required to execute a contract bond within seven days of acceptance of sale and to make a further deposit making the total deposit amount to two months' instalments.

6. When such deposits shall not be made, or when the bidder fails to execute the contract bond within the time fixed, or when he fails to make payment of the monthly instalments, the contract shall be re-sold at the expense and risk of the first purchaser, who shall, however, be not permitted to claim any profit arising from such re-sale, and the deposits made by him forfeited.

7. The amount of tender that will be accepted will be payable in twelve monthly instalments, each instalment being paid before the 15th of the month for which it is due; the deposit made by the contractor being held over as a guarantee for the due fulfilment of the contract and returnable after a month after the expiry of the contract.

8. The contractor is also bound to keep an account showing the daily collections, etc., in the form specified by the President and it shall be submitted by the contractor together with counterfoils of receipts granted by them, every month for the inspection of the President and shall also be open to inspection by the Municipal authorities.

9. He shall also be bound to keep true account of traffic passing through the gate as specified in para 8, for which purpose he shall bind himself to maintain at his own cost a resident mutsaddi at the toll gate.

10. The contractor will have the use of existing toll-house and gate and he will be required to keep them in good order.

11. No tolls will be levied on the following :—

(1) Vehicles bearing Municipal numbers either of City or of Civil and Military Station or possessing passes of the City Municipality and on carriages or carts, and animals, the property of, or employed by Government or the Municipal Commission of City or Civil and Military Station or licensed or registered by the said Commission ; and no more than one payment of toll shall be demanded, for and in respect of, any carriage or cart or animal, in any one period of twenty-four hours counted from midnight to midnight.

(2) All vehicles and animals used for the passage of Troops and Military or Government Stores and equipages on their march, or of Military, Civil or Police Officers on duty, or of any person or property in their custody.

12. Further particulars may be had on enquiry at the City Municipal Office, District Office road :—

SCHEDULE.

	Rs.	a.	p.
On every four-wheeled carriage on springs	0	4	0
Do two-wheeled do	0	2	0
Do hackney or cart drawn by men, bulls, bullocks, horses, asses or mules, laden	0	2	0
Do do not laden	0	1	0
Do buffalo, bull or bullock, laden	0	0	6
Do horse over 13 hands, laden or ridden	0	1	0
Do horse of or under 13 hands, laden or ridden . ..	0	0	6
Do horse over 13 hands, not laden or ridden	0	0	6
Do elephant	0	8	0
Do camel	0	1	0

Notice dated the 29th May 1906.

With reference to notice dated the 24th April 1906, the public are informed that the disposal of appeals against taxes in No. IX. Malleswaram Division has been postponed to Friday the 8th June 1906, 7-30 A.M. to 9-30 A.M.

PROCEEDINGS OF AN ORDINARY MEETING OF THE MUNICIPAL COMMISSIONERS FOR THE CITY OF BANGALORE, HELD AT THEIR OFFICE PREMISES AT 7-30 A.M. ON THURSDAY THE 19TH APRIL 1906.

President—Present.

Ex-Officio Members.

Absent—The Senior Surgeon and Sanitary Comr. with the Govt. of Mysore.
Do —The Executive Engr., Bangalore Dn.
Absent—The Principal, Central College.
Do —The Amildar, Bangalore Taluk.

Municipal Commissioners.

Present—C. Krishna Murti, Esq.

I—Palace Division.

Present—I. Bronson, Esq.
Absent—Aga Abdulla Saheb, Esq.

II—Bale Pete Division.

Present—B. Gangiah, Esq.
Do —D. Venkataramaiya, Esq., B.A.

III—Manavarte Pete Division.

Absent—Veerabhadra Chetty, Esq.
Do —B. K. Garudachar, Esq.

IV—Alsur Pete Division.

Present—Boppannanavara Basanna, Esq.
Do —N. Ramabhadraiya, Esq.

V—Nagarth Pete Division.

Absent—B. V. Ramaswami Chetty, Esq., B.A.
Present—B. Oosman Khan, Esq.

VI—Lal-Bagh Division.

Absent—J. Cameron, Esq., F.L.S.
Present—D. B. Ramachendra Mudaliar, Esq.

VII—Fort Division.

Present—B. Appajappa, Esq.
Absent—J. W. Hardy, Esq.

VIII—Basavangudi Division.

Present—M. K. Krishna Murti Rao, Esq.
Absent—Khader Mohadin Meccai, Esq.

IX—Malleswaram Division.

Absent—S. Venkatarangaiengar, Esq.
Do —P. R. Subramanya Sastri, Esq., B.A.

1. Cash Account Current, Demand, Collection and Balance Statements, Mortuary return, Progress report of works, City Municipal English and Kannada Schools returns, Langarkhana return, Statement of materials and statement of rewards for the destruction of dogs for March 1906.

Resolution.—Passed.

RECEIPTS FOR

Receipts	DEMAND				
	Arrears as stood on 1st July 1905	For the year 1905-06.			Total including arrears
		For previous months	For the month of Mar. 1906	Total	
	Rs. a. p.	Rs. a. p.	Rs. a. p.	Rs. a. p.	Rs. a. p.
I. Octroi—					
(1) Timber	...	5,358 15 2	862 6 5	6,221 5 7	6,221 5 7
(2) Tobacco	...	6,405 0 9	768 4 8	7,173 5 5	7,173 5 5
(3) Betel-leaves	...	4,519 6 11	739 7 11	5,258 14 10	5,258 14 10
(4) Fresh cocoanuts	...	4,213 3 8	467 7 1	4,680 10 9	4,680 10 9
(5) Dry cocoanuts		1,019 15 5	205 7 9	1,225 7 0	1,225 7 0
(6) Piece-goods	...	17,668 6 0	2,744 14 3	20,413 4 3	20,413 4 3
(7) Mangalore tiles	...	85 6 0	9 2 8	94 8 8	94 8 8
(8) Sugar	...	2,387 1 3	295 4 3	2,682 5 6	2,682 5 6
(9) Horse-gram	...	1,412 11 1	222 1 9	1,634 12 10	1,634 12 10
(10) Oats	...	2 8 0	0 3 4	2 11 4	2 11 4
(11) Bran .. .		46 1 7	17 2 7	63 4 2	63 4 2
(12) Chaff	...	4 14 3	0 8 3	5 6 6	5 6 6
(13) Storage fees	...	50 8 1	5 8 0	56 0 1	56 0 1
(14) Rahadari fees	...	148 5 0	25 2 0	173 7 0	173 7 0
(15) Tobacco license ...		542 0 0	21 0 0	563 0 0	563 0 0
Total, Octroi ...	...	43,864 7 0	6,384 0 11	50,248 7 11	50,248 7 11
II. Taxes on houses, buildings and lands ..	47,261 0 1	889 3 2	1,240 1 9	2,129 4 11	49,390 5 0
Lighting tax	11,606 10 11	428 10 7	284 8 5	713 3 3	12,319 14 2
Water tax	18,293 5 5	1,373 4 0	736 9 5	2,109 13 3	20,403 2 8
Total, Taxes ..	77,161 0 5	2,691 1 9	2,261 3 8	4,952 5 5	82,113 5 10
II. License Receipts—					
(a) Liquor licenses	3,726 0 4	10,343 0 0	2,878 8 0	13,221 8 0	16,947 8 4
(b) Other licenses ...	596 1 4	12,475 8 10	1,098 8 0	13,574 0 10	14,170 2 2
Total, License Receipts ...	4,322 1 8	22,818 8 10	3,977 0 0	26,795 8 10	31,117 10 6
VII. ther Taxes—Mohatarfa—					
(a) Shop-tax	29,042 1 8	556 6 8	492 0 9	1,048 7 5	30,090 9 1
(b) Loom tax	162 15 9	...	...	...	162 15 9
(c) Oil-mill tax	898 8 4	...	...	...	898 8 4
(d) Cart tax	265 0 0	...	.	...	265 0 0
Total, Mohatarfa ...	30,368 9 9	556 6 8	492 0 9	1,048 7 5	341 7 1 2
VIII. Rents from—					
(a) Market contract fees ...	45 0 0	2,600 0 0	325 0 0	2,925 0 0	2,970 0 0
(b) Market rents	132 0 5	3,287 1 0	416 6 0	3,703 7 0	3,835 7 5
(c) Land rents	464 0 0	971 15 11	101 8 0	1,073 7 11	1,537 7 11
Total Rents ...	641 0 5	6,859 0 11	842 14 0	7,701 14 11	8,342 15 4
IX. Fines	...	1 0 0	...	1 0 0	1 0 0
X. Miscellaneous—					
(a) Sale of lands	...	1,844 7 6	49 0 0	1,893 7 6	1,893 7 6
(b) Refunds	...	12 1 5	7 9 11	19 11 4	19 11 4
(c) Pounds	...	127 11 0	10 1 6	137 12 6	137 12 6
(d) Land revenue	.	979 0 3	616 11 0	1,595 11 3	1,595 11 3
(e) English School	...	3,071 2 0	412 4 0	3,483 6 0	3,483 6 0
(f) Kannada Boys' School fees ...	...	207 6 0	53 0 6	260 6 6	260 6 6
(g) Sale of manure	1,147 4 0	2,627 0 0	267 0 0	2,894 0 0	4,041 4 0
(h) Scavenging fees	5,353 3 5	2,510 0 5	315 5 0	2,825 5 5	8,178 8 10
(i) Notice and warrant fees ...	...	519 2 11	51 1 0	570 3 11	570 3 11
(j) Chattram feeding charges ...	...	533 5 4	66 10 8	600 0 0	600 0 0
(k) Other contributions	...	1,000 0 0	322 13 3	13 22 13 3	1,322 13 3
(l) Sale of grass	27 0 0	457 0 0	...	457 0 0	484 0 0
(m) Other items	99 0 0	778 5 8	1,064 12 8	1,843 2 4	1,942 2 4
Total, Miscellaneous ...	6,626 7 5	14,666 10 6	3,236 5 6	17,903 9 0	24,529 7 5
Payments for Municipal services rendered to individuals	...	744 4 6	39 14 0	784 2 6	784 2 6
Deposits	...	1,713 3 2	218 0 6	1,930 3 6	1,930 3 8
Advances recovered	...	152 13 6	...	152 13 6	152 13 6
Collection of tolls	4,522 14 11	18,469 11 9	2 94 5 6	20,664 1 3	25,187 0 2
Total ...	4,522 14 11	21,079 0 11	2,452 4 0	23,531 4 11	28,054 3 10
Grand Total ...	1,23,642 2 7	1,12,536 4 7	19,645 12 10	1,32,182 1 5	2,55,824 4 0

MARCH 1906.

COLLECTION																							
Till the end of the last month												During the month											
Arrears of previous years			For 1905-06									Arrears of previous years			For 1905-06								
			For previous months			For Feb. 1906			Total			Total including arrears			For previous months			For Mar. 1906			Total			Total including arrears		
Rs.	a.	p.	Rs.	a.	p.	Rs.	a.	p.	Rs.	a.	p.	Rs.	a.	p.	Rs.	a.	p.	Rs.	a.	p.	Rs.	a.	p.	Rs.	a.	p.
..			4,832	1	8	526	13	6	5,358	15	2	5,358	15	2	...			...			862	6	5	862	6	5
...			5,600	6	10	804	9	11	6,405	0	9	6,405	0	9	...			...			768	4	8	768	4	8
...			3,931	10	1	587	12	10	4,519	6	11	4,519	6	11	...			.			739	7	11	739	7	11
..			3,766	15	9	446	4	8	4,213	3	8	4,213	3	8	...			...			467	7	1	467	7	1
...			980	0	0	39	15	3	1,019	15	3	1,019	15	3	...			...			205	7	9	205	7	9
...			15,327	1	8	2,341	4	4	17,668	6	0	17,668	6	0	...			...			2,744	14	3	2,744	14	3
...			84	5	10	1	0	2	85	6	0	85	6	0	...			...			9	2	8	9	2	8
..			2,090	10	11	296	6	4	2,387	1	3	2,387	1	3	...			...			295	4	3	295	4	3
...			1,055	11	8	356	15	5	1,412	11	1	1,412	11	1				...			222	1	9	222	1	9
..			2	5	7	0	2	5	2	8	0	2	8	0	...			...			0	3	4	0	3	4
...			44	6	10	1	10	9	46	1	7	46	1	7	...			...			17	2	7	17	2	7
..			4	5	5	0	8	10	4	14	3	4	14	3	...			...			0	8	3	0	8	3
...			25	1	7	25	6	6	50	8	1	50	8	1	.			...			5	8	0	5	8	0
...			127	12	0	20	9	0	148	5	0	148	5	0	...			...			25	2	0	25	2	0
...			515	0	0	27	0	0	542	0	0	542	0	0	...			...			21	0	0	21	0	0
...			35,387	15	1	5,476	7	11	43,864	7	0	43,864	7	0	...			...			6,384	0	11	6,384	0	11
21,208	9	2	76	1	2	813	2	0	889	3	2	22,097	12	4	814	4	0	...			1,240	1	9	1,240	1	9	2,054	5	9
3,479	9	6	55	15	4	372	11	3	428	10	7	3,908	4	1	171	2	6	...			284	8	8	284	8	8	455	11	2
9,005	1	2	101	9	4	1,271	10	8	1,373	4	0	10,378	5	2	427	9	0	...			736	9	3	736	9	3	1,164	2	3
33,693	3	10	233	9	10	2,457	7	11	2,691	1	9	36,384	5	7	1,412	15	6	..			2,261	3	8	2,261	3	8	3,674	3	2
...			9,176	8	0	1,166	8	0	10,343	0	0	10,343	0	0				...			2,878	8	0	2,878	8	0	2,878	8	0
			11,584	8	10	891	0	0	12,475	8	10	12,475	8	10	...			...			1,098	8	0	1,098	8	0	1,098	8	0
...			20,761	0	10	2,057	8	0	22,818	8	10	22,818	8	10	...			...			3,977	0	0	3,977	0	0	3,977	0	0
12,563	2	2	406	0	0	150	6	8	556	6	8	13,119	8	10	283	0	6	...			492	0	9	492	0	9	775	1	3
6	4	0	...			...			...			6	4	0	0	4	0	...			...			...			0	4	0
360	0	0	...			...						360	0	0	5	0	0	...			...			...			5	0	0
12	0	0	...			...			...			12	0	0	...			...			...			...			...		
12,941	6	2	406	0	0	150	6	8	556	6	8	13,497	12	10	288	4	6	...			492	0	9	492	0	9	780	5	3
45	0	0	2,275	0	0	325	0	0	2,600	0	0	2,645	0	0	...			..			325	0	0	325	0	0	325	0	0
96	14	0	2,838	4	0	448	13	0	3,287	1	0	3,383	15	0	3	0	0	...			416	6	0	416	6	0	419	6	0
16	0	0	743	7	1	228	8	10	971	15	11	987	15	11	...			...			101	8	0	101	8	0	101	8	0
157	14	0	5,856	11	1	1,002	5	10	6,859	0	11	7,016	14	11	3	0	0	...			842	14	0	842	14	0	845	14	0
...			1	0	0	...			1	0	0	1	0	0	...			...			...			..			..		
...			1,563	7	6	281	0	0	1,844	7	6	1,844	7	6	...			..			49	0	0	49	0	0	49	0	0
...			6	13	0	5	4	5	12	1	5	12	1	5	...			...			7	9	11	7	9	11	7	9	11
...			117	3	0	10	8	0	127	11	0	127	11	0	...			...			10	1	6	10	1	6	10	1	6
...						979	0	3	979	0	3	979	0	3	...			...			616	11	0	616	11	0	616	11	0
...			2,590	12	0	480	6	0	3,071	2	0	3,071	2	0	...			...			412	4	0	412	4	0	412	4	0
...			152	4	6	55	1	6	207	6	0	207	6	0	...			...			53	0	6	53	0	6	53	0	6
404	2	6	2,483	6	0	144	0	0	2,627	0	0	3,031	2	6	...			...			267	0	0	267	0	0	267	0	0
166	1	6	2,157	14	11	353	1	6	2,510	0	5	2,676	1	11	...			...			315	5	0	315	5	0	315	5	0
...			476	4	4	42	14	7	519	2	11	519	2	11	...			...			51	1	0	51	1	0	51	1	0
...			466	10	8	66	10	8	533	5	4	533	5	4	...			...			66	10	8	66	10	8	66	10	8
...			1,000	0	0	...			1,000	0	0	1,000	0	0	...			...			322	13	3	322	13	3	322	13	3
..			442	0	0	15	0	0	457	0	0	457	0	0	...			...			...			...			...		
...			639	11	0	138	10	8	778	5	8	778	5	8	...						1,064	12	8	1,064	12	8	1,064	12	8
570	4	0	12,096	0	11	2,570	9	7	14,666	10	6	15,236	14	6	...			...			3,236	5	6	3,236	5	6	3,236	5	6
...			591	4	6	153	0	0	744	4	6	744	4	6	...			...			39	14	0	39	14	0	39	14	0
...			1,482	3	2	230	0	0	1,712	3	2	1,712	3	2	...			.			218	0	6	218	0	6	218	0	6
..			152	13	6				152	13	6	152	13	6	..			...			...			...			...		
3,745	13	4	16,161	4	0	2,308	7	9	18,469	11	9	22,215	9	1	...			...			2,194	5	6	2,194	5	6	2,194	5	6
3,745	13	4	18,387	9	2	2,691		9	21,079	0	11	24,824	14	3	...			...			2,452	4	0	2,452	4	0	2,452	4	0
51,108	9	4	96,129	14	11	16,407	5	8	1,12,536	4	7	1,63,644	13	11	1,704	4	0	...			19,645	12	10	19,645	12	10	21,350	0	10

RECEIPTS FOR

Receipts	COLLECTION—*concld.*				
	Total Collection				
	Arrears of previous years	For 1905-06			Total including arrears
		For previous months	For Mar. 1906	Total	
	Rs. a. p.	Rs. a. p.	Rs. a. p.	Rs. a. p.	Rs. a. p.
I. Octroi—					
(1) Timber	...	5,358 15 2	862 6 5	6,221 5 7	6,221 5 7
(2) Tobacco ...	...	6,405 0 9	768 4 8	7,173 5 5	7,173 5 5
(3) Betel-leaves ...	...	4,519 6 11	739 7 11	5,258 14 10	5,288 14 10
(4) Fresh cocoanuts ...	...	4,213 3 8	467 7 1	4,680 10 9	4,680 10 9
(5) Dry cocoanuts ...	...	1,019 15 3	205 7 9	1,225 7 0	1,225 7 0
(6) Piece-goods ..	..	17,668 6 0	2,744 14 3	20,413 4 3	20,413 4 3
(7) Mangalore tiles ...	...	85 6 0	9 2 8	94 8 8	94 8 8
(8) Sugar ..	..	2,387 1 3	295 4 3	2,682 5 6	2,682 5 6
(9) Horse gram ...	..	1,412 11 1	222 1 9	1,634 12 10	1,634 12 10
(10) Oats ...	...	2 8 0	0 3 4	2 11 4	2 11 4
(11) Bran	..	46 1 7	17 2 7	63 4 2	63 4 2
(12) Chaff ..	...	4 14 3	0 8 3	5 6 6	5 6 6
(13) Storage fees ..	...	50 8 1	5 8 0	56 0 1	56 0 1
(14) Rahadari fees ..	...	148 5 0	25 2 0	173 7 0	173 7 0
(15) Tobacco licenses ..	..	542 0 0	21 0 0	563 0 0	553 0 0
Total, Octroi	...	43,864 7 0	6,384 0 11	50,248 7 11	50,248 7 11
II. Tax on houses, lands, etc.—					
(a) House tax ..	22,022 13 2	889 3 2	1,240 1 9	2,129 4 11	24,152 2 1
(b) Lighting tax .	3,650 12 0	428 10 7	284 8 8	713 3 3	4,363 15 3
(c) Water tax ..	9,432 10 2	1,373 4 0	736 9 3	2,109 13 3	11,542 7 5
Total, Taxes ..	35,106 3 4	2,691 1 9	2,261 3 8	4,952 5 5	40,058 8 9
III. License Receipts –					
(a) Liquor licenses ..	...	10,343 0 0	2,878 8 0	13,221 8 0	13,221 8 0
(b) Other licenses ..	..	12,475 8 10	1,098 8 0	13,574 0 10	13,574 0 10
Total, License Receipts .	..	22,818 8 10	3,977 0 0	26,795 8 10	26,795 8 10
VII. Other taxes, Mohatarfa—					
(a) Shop tax	12,846 2 8	556 6 8	492 0 9	1,048 7 5	13,894 10 1
(b) Loom tax	6 8 0	...	...	...	6 8 0
(c) Oil-mill tax	365 0 0	...	...	...	365 0 0
(d) Cart tax	12 0 0	...	..	...	12 0 0
Total, Mohatarfa	13,229 10 8	556 6 8	492 0 9	1,048 7 5	14,278 2 1
VII. Rents from—					
(a) Market contract fees ..	45 0 0	2,600 0 0	325 0 0	2,925 0 0	2,970 0 0
(b) Market rents ..	99 14 0	3,287 1 0	416 6 0	3,703 7 0	3,803 5 0
(c) Land rents ..	16 0 0	971 15 11	101 8 0	1,073 7 11	1,089 7 11
Total, Rents ..	160 14 0	6,859 0 11	842 14 0	7,701 14 11	7,862 12 11
IX. Fines	...	1 0 0	... ..	1 0 0	1 0 0
X. Miscellaneous—					
(a) Sale of lands ...	...	1,844 7 6	49 0 0	1,893 7 6	1,893 7 6
(b) Refunds ...	.	12 1 5	7 9 11	19 11 4	19 11 4
(c) Pounds ...	...	127 11 0	10 1 6	137 12 6	137 12 6
(d) Land revenue ...	...	979 0 3	616 11 0	1,595 11 3	1,595 11 3
(e) English School fees ...	...	3,071 2 0	412 4 0	3,483 6 0	3,483 6 0
(f) Kannada Boys' School fees		207 6 0	53 0 6	260 6 6	260 6 6
(g) Sale of manure ...	404 2 6	2,627 0 0	267 0 0	2,894 0 0	3,298 2 6
(h) Scavenging fees ...	166 1 6	2,510 0 5	315 5 0	2,825 5 5	2,991 6 11
(i) Notice and warrant fees .	...	519 2 11	51 1 0	570 3 11	570 3 11
(j) Chattram feeding charges...	..	533 5 4	66 10 8	600 0 0	600 0 0
(k) Other contributions ...	...	1,000 0 0	322 13 3	1,322 13 3	1,322 13 3
(l) Sale of grass ...	...	457 0 0	..	457 0 0	457 0 0
(m) Other items ...	...	778 5 8	1,064 12 8	1,843 2 4	1,843 2 4
Total, Miscellaneous ...	570 4 0	14,666 10 6	3,236 5 6	17,903 0 0	18,473 4 0
Payments for Municipal services rendered to private individuals ...	...	744 4 6	39 14 0	784 2 6	784 2 6
Deposits	...	1,712 3 2	218 0 6	1,930 3 8	1,930 3 8
Advances recovered .	..	152 13 6	...	152 13 6	152 13 6
Collection of tolls	3,745 13 4	18,469 11 9	2,194 5 6	20,664 1 3	24,409 14 7
Total ...	3,745 13 4	21,079 0 11	2,452 4 0	23,531 4 11	27,277 2 3
Grand Total ..	52,812 13 4	1,12,536 4 7	19,645 12 10	1,32,182 1 5	1,84,994 14 9

MARCH 1906—*concld.*

REMISSION GRANTED TILL THE END OF MARCH 1906					BALANCE					Remarks
Arrears of previous years	For 1905-06			Total	Arrears of previous years	For 1905-06			Total including arrears	
	For previous months	For Mar. 1906	Total			For previous months	For Mar. 1906	Total		
Rs. a p.	Rs.	Rs.	Rs.	Rs. a. p.	Rs. a. p.	Rs. a. p.	Rs. a. p.	Rs. a. p.	Rs. a. p.	
...	...	...	...	...	...	...	...	...	...	
...	...	...	...	...	...	...	...	...	...	
...	...	...	...	...	...	...	...	...	...	
...	...	...	...	...	...	...	...	...	...	
...	...	...	...	...	...	...	...	...	...	
...	...	...	...	...	...	...	...	...	...	
...	...	...	...	...	...	...	...	...	...	
...	...	...	...	...	...	...	...	...	...	
...	...	...	...	...	...	...	...	...	...	
...	...	...	...	...	...	...	...	...	...	
...	...	...	...	...	...	...	...	...	...	
...	...	...	...	...	...	...	...	...	...	
...	...	...	...	...	...	...	...	...	...	
...	...	...	...	...	...	...	...	...	...	
...	...	...	...	...	...	...	...	...	...	
1,053 3 8	...	...	...	1,053 3 8	24,184 15 3	...	...	...	24,184 15 3	
162 8 4	...	...	...	162 8 4	7,793 6 7	...	...	...	7,793 6 7	
161 11 8	...	...	...	161 11 8	8,698 15 7	...	...	...	8,698 15 7	
1,377 7 8		...	...	1,377 7 8	40,677 5 5	...	...	...	40,677 5 5	
...	...	...	...	...	3,726 0 4	...	...	...	3,726 0 4	
...	...	...	...	...	596 1 4	...	...	...	596 1 4	
	...	...	...	...	4,322 1 8	...	...	...	4,322 1 8	
586 4 0	...	...	...	586 4 0	15,609 11 0	...	...	...	15,609 11 0	
33 0 0	...	...	...	33 0 0	123 7 9	...	...	...	123 7 9	
...	...	...	...	...	533 8 4	...	...	...	533 8 4	
150 0 0	...	...	...	150 0 0	103 0 0	...	...	...	103 0 0	
769 4 0	...	...	...	769 4 0	16,369 11 1	...	...	...	16,369 11 1	
...	...	...	...	...	...	...	...	...	...	
...	...	...	...	...	32 2 5	...	...	...	32 2 5	
...	...	...	...	...	448 0 0	...	...	...	448 0 0	
...	...	...	...	...	480 2 5	...	...	...	480 2 5	
...	...	...	...	...	...	...	...	...	...	
...	...	...	...	...	...	...	...	...	...	
...	...	...	...	...	...	...	...	...	...	
...	...	...	...	...	...	...	...	...	...	
...	...	...	...	...	...	...	...	...	...	
...	...	...	...	...	...	...	...	...	...	
...	...	...	...	...	743 1 6	...	...	...	743 1 6	
...	...	...	...	...	5,187 1 11	...	...	...	5,187 1 11	
...	...	...	...	...	...	...	...	...	...	
...	...	...	...	...	...	...	...	...	...	
...	...	...	...	...	...	...	...	...	...	
...	...	...	...	...	27 0 0	...	...	...	27 0 0	
...	...	...	...	...	99 0 0	...	...	...	99 0 0	
...	...	...	...	...	6,056 3 5	...	...	...	6,056 3 5	
...	...	...	...	...	...	...	...	...	...	
...	...	...	...	...	...	...	...	...	...	
...	...	...	...	...	...	...	...	...	...	
...	...	...	...	...	777 1 7	...	...	...	777 1 7	
...	...	...	...	...	777 1 7	...	...	...	777 1 7	
2,146 11 8	...	...	...	2,146 11 8	68,682 9 7	...	...	...	68,682 9 7	

EXPENDITURE FOR THE MONTH OF MARCH 1906.

Expenditure	Budget Estimate Expenditure for 1905-06	Disbursements			Balance
		For previous months	For this month	Total	
	Rs.	Rs. a. p.	Rs. a. p.	Rs. a. p.	Rs. a. d
I. Interest on Debt, etc.	...	...	...	...	...
II. Head Office Charges	13,516	7,983 0 8	931 8 0	8,914 8 8	4,601 7 4
III. Collections—					
(a) Octroi	5,630	3,784 11 4	425 7 11	4,210 3 3	1,419 12 9
(b) House tax and Mohatarfa }	6,594	4,190 15 9	590 0 6	4,781 0 3	1,812 15 9
(c) Other taxes ... }					
(d) Rents assigned to Municipality	690	398 10 11	47 0 0	445 10 11	244 5 1
Total III, Collections ...	12,914	8,374 6 0	1,062 8 5	9,436 14 5	3,477 1 7
IV. Conservancy—					
(a) Establishment	31,896	19,972 5 5	2,783 2 8	22,755 8 1	9,140 7 11
(b) Other Charges	6,417	3,864 7 6	433 4 0	4,297 11 6	2,119 4 6
Total IV, Conservancy ...	8,313	23,836 12 11	3,216 6 8	27,053 3 7	11,259 12 5
VI. Registration of Births and Deaths ...	7,720	4,351 2 11	505 4 0	4,856 6 11	2,863 9 1
VII. Lighting Charges	16,920	4,354 7 9	338 7 8	4,692 15 5	12,227 0 7
VIII. Public Works—(a) Supervision establishment.	5,964	3,610 5 11	331 1 9	3,941 7 8	2,022 8 4
(b) Special repairs of roads, ...	31,000	14,679 2 10	1,575 3 8	16,254 6 6	14,745 9 6
(c) Ordinary repairs of roads	11,000	5,966 15 2	828 15 1	6,795 14 3	4,204 1 9
(d) Drains, original	...	...	...	...	...
(e) Do repairs	4,542	1,244 4 4	317 11 5	1,561 15 9	2,980 0 3
(f) Water-supply, original	...	..	...	...	...
(g) Do repairs...	...	...	...	...	...
(h) Buildings, original	2,000	360 0 8	...	360 0 8	1,639 15 4
(i) Do repairs	3,500	1,492 13 8	95 11 11	1,588 9 7	1,911 6 5
(j) Road watering and planting	1,500	770 13 5	511 13 2	1,282 10 7	217 5 5
(k) Other works, original	500	493 8 8	7 7 4	500 0 0	...
(l) Do repairs	1,500	1,056 6 7	183 8 3	1,239 14 10	260 1 2
(m) Compensation	3,000	1,000 1 3	63 5 4	1,063 6 7	1,936 9 5
(n) Tools and plant	1,000	407 8 7	...	407 8 7	592 7 5
(o) Reserve	500	42 1 3	6 0 0	48 1 3	451 14 9
(p) Roads, original	1,249	...	...	..	1,249 0 0
(q) Special works	10,000	2,229 8 3	173 0 11	2,402 9 2	7,597 6 10
(r) Removing congestion	10,600	396 5 8	366 6 2	732 11 10	9,867 4 2
Total VIII, Public Works ...	87,855	33,749 0 3	4,460 5 0	38,209 5 3	49,675 10 9
IX. Charitable Grants—(a) Dispensaries ...	2,142	958 4 9	89 2 1	1,047 6 10	1,094 9 2
(b) Hospitals	2,400	1,600 0 0	200 0 0	1,800 0 0	600 0 0
(c) E. D. Hospital	9,420	5,051 10 0	437 10 10	5,509 4 10	3,910 11 2
(d) Vaccination	524	296 0 0	37 0 0	333 0 0	191 0 0
(e) Maternity	6,690	2,292 0 11	403 2 2	2,695 3 1	3,994 12 11
(f) Langarkhana	2,000	1,932 5 0	268 0 0	2,200 5 0	799 11 0
(g) Chattram	1,819	1,192 3 1	153 9 2	1,345 12 3	473 3 9
(h) Orphanage	..	...	..	..	..
(i) Home for incurable paupers	724	566 14 5	63 8 6	630 6 11	93 9 1
Total IX, Charitable Grants ..	25,719	13,889 6 2	1,672 0 9	15,561 6 11	11,157 9 1
X. Education—					
(a) Srinivasa Mandiram Library	300	200 0 0	25 0 0	225 0 0	75 0 0
(b) City Municipal English School	7,687	4,634 14 4	610 12 1	5,245 10 5	2,441 5 7
(c) Bangalore Sanskrit College	600	...		...	600 0 0
(d) Kannada Boys' School	2,311	1,488 1 4	263 0 0	1,751 1 4	559 14 8
(e) Schools, Grants-in-aid	588	352 0 0	44 0 0	396 0 0	192 0 0
(f) Chamarajendrapet School	1,236	821 7 9	103 0 0	924 7 9	311 8 3
Total X, Education ...	13,722	7,496 7 5	1,045 12 1	8,542 3 6	4,179 12 6
XI. Miscellaneous—					
(a) Garden	1,200	578 9 3	70 0 0	648 9 3	551 6 9
(b) Refunds	447	447 0 0	...	447 0 0	...
(c) Cattle-pounds	300	136 15 9	17 6 3	154 6 0	145 10 0
(d) Reward	200	4 8 0	1 6 0	5 14 0	194 2 0
(e) Pension charges	500	..	...	...	500 0 0
(f) Fairs and festivals	1,000	256 0 2	...	256 0 2	743 15 10
(g) Other miscellaneous items	700	32 9 0	...	32 9 0	667 7 0
Total XI, Miscellaneous ...	4,347	1,455 10 2	88 12 3	1,544 6 5	2,802 9 7
Water-supply charges	39,260	..	.	...	39,260 0 0
	2,65,286	1,05,490 6 3	13,321 0 10	1,18,811 7 1	1,41,474 8 11
Paid in excess of drains, original	...	2,133 8 0	1,649 9 2	3,783 1 2	..
Do do refunds . ..	...	92 12 0	...	92 12 0	...
Do City Improvement	..	41 6 7	.	41 6 7	..
Repayment of deposits ...	..	727 2 8	8 7 6	731 10 2	...
Paid in excess on account of other works, original	..	...	75 0 8	75 6 8	...
Total ...		2,990 13 3	1,733 1 4	4,723 14 7	...
Grand Total ...	2,65,286	1,08,481 3 6	15,054 2 2	1,23,535 5 8	...
Closing Balance ...	.	...	1,10,821 13 3	1,10,821 13 3	..
Grand Total ..	..	...	1,25,875 15 5	2,34,357 1	..

Statement showing the number of Births and Deaths registered within the City Municipal limits for the month of March 1906.

Diseases	Europeans		Eurasians		Mahomedans		Hindus		Native Christians		Other classes		Jains		Parsis		Total		Total		Difference	
																			Mar. 1906	Feb. 1906	Increase	Decrease
	M.	F.	M.	F.	M.	F.	M.	F.	M.	F.	M.	F.	M.	F.	M	F.	M.	F.				
Cholera ...	...	...	...	...	...	...	...	..	...	...	...	...	...	...	...	...	...	...	...	...	...	...
Small-pox ..	...	...	1	...	1	1	9	2	...	...	..	...	..	...	..	...	1	3	24	14	10	...
Fevers ...	...	...	.	..	1	1	11	16	...	...	..	...	...	.	..	...	12	17	29	40	..	11
Bowel-complaints	...	..	1	..	3	3	13	21	...	...	...	...	..	..	..	..	18	24	42	31	9	...
Wounding ...	..	...	.	...	...	...	...	...	...	...	...	...	...	...	...	...	...	...	..	1	...	1
Plague ...	...	...	...	...	...	..	1	22	19	..	...	...	...	...	..	..	22	20	42	55	...	13
Child-birth ...	...	...	...	...	...	...	1	...	7	...	...	...	...	..	.	...	...	8	8	6	2	...
Other causes—																						
Asthma ...	...	...	...	...	...	...	1	2	...	...	...	...	...	..	..	...	1	2	3	2	1	...
A. Septicæmia ...	...	...	...	...	...	...	1	...	...	...	...	...	...	...		.	1	..	1	1	..	...
Anæmia ..	...	.	...	...	...	...	1	...	...	.	...	.	...	..	...	...	...	1	1	2	...	1
Abscess ...	...	...	...	...	...	...	...	1	...	..	...	..	...	...	..	.	1	...	1	...	1	...
Bronchitis ...	.	...	...	...	...	3	3	10	17	1	...	...	...	...	...	...	14	20	34	29	5	...
Bright's disease ...	...	...	...	...	...	...	...	1	...	...	...	...	..	...	...	..	1	..	1	...	1	...
Chicken-pox ...	...	...	...	...	...	1	...	...	...	...	...	...	...	...	...	..	1	...	1	...	1	...
Cancer ...	...	...	..	...	...	.	...	...	1	...	...	...	...	...	..	..	...	1	1	1	...	...
Concrum Oris ...	...	...	...	..	...	..	..	...	1	...	...	...	...	...	...	...	.	1	1	1	...	
Convulsions ...	...	...	...	1	...	2	3	3	5	...	...	...	..	...	...	...	6	8	14	12	2	...
Cough ...	...	...	...	...	...	...	1	1	...	...	...	...	...	...	...	...	1	1	2	...	2	..
Drowning ..	...	...	...	...	...	...	...		2	...	...	...	...	...	...	..	...	2	2	2	...	..
Dropsy ...	...	...	...	.	...	...	..	1	8	...	1	..	...	...	...	..	1	9	10	12	...	2
ebility ...	...	...	...	...	..	1	...	7	17	...	...	...	..	...	...	...	8	17	25	17	8	...
Erysipelas ...	..	...	...	...	..	...	...	...	1	.	...	...	...	...	...	...	..	1	1	...	1	...
Emphysema ...	...	...	..	...	...	...	...	..	1	...	...	...	...	...	...	...	..	1	1	...	1	...
Epilepsy ...	..	...	...	...	...	...	..	1	...	...	...	...	..	...	...	...	1	.	1	...	1	..
Hœmorrhage ...	...	...	...	..	...	...	...	1	...	...	...	...	..	...	...	.	1	..	1	...	1	...
Hepatitis ...	..	..	..	...	...	...	..	5	...	...	...	...	..	...	...	...	5	..	5	..	5	
Leprosy ..	...	...	...	...	...	...	...	2	...	...	...	...	...	...	...	...	2	..	2	1	1	...
Liver disease ...	...	...	...	...	...	...	...	2	...	...	...	...	...	...	...	...	2	...	2	4	...	2
M. Cachexia ...	...	...	...	...	...	1	1	5	6	...	...	...	...	..	..	...	6	7	13	23	...	10
Malnutrition ...	...	...	..	...	...	.	...	2	1	.	...	..	...	...	...	...	2	1	3	8	...	5
Measles ...	...	...	...	...	...	1	1	3	3	...	...	...	...	...	...	...	4	4	8	10	...	2
Not known ...	...	..	...	...	...	...		...	1	...	...	..		..	...	..	...	1	1	2	...	1
Old age ...	...	...	...	...	...	..	3	12	21	...	..	...	...	...	...	...	12	24	36	28	8	...
Pneumonia ...	...	...	..	...	...	2	1	5	4	...	2	..	...	...	.	...	8	7	15	4	11	..
P. Birth ...	...	...	..	...	..	1	3	9	12	...	...	..	..	...	...	...	10	15	25	23	2	.
Phthisis ...	...	...	...	...	..	1	1	5	12	...	1	...	...	...	...	..	6	14	20	20	...	..
Paralysis ...	...	...	...	...	...	1	...	1	2	...	...	...	...		..	...	2	2	4	2	2	
Privatio ...	...	...	...	...	...	.	...	1	..	...	...	...	...	...	...	...	1		1	...	1	..
Parotitis ...	...	...	...	..	...	...	...	...	1	..	..	..	...	...	...	..	...	1	1	...	1	..
Scrofula ...	...	...	...	...	..	..	...	1	...		...		..	..	...	..	1	...	1	...	1	...
Structure of urethra	...	...	..	...	...	...	.	1	...	..	...	...	...	...	...		1	...	1	3	..	2
Tabes Mesenterica	..	...	...	...	1	...	...	...	..	...	..	...	..	..	...		..	1	1	...	1	...
Teething ...	...	...	...	...	...	...	...	2	1	...	...	...	...	...	...	..	2	1	3	...	3	...
Ulcer ...	...	...	..	...	..	...	...	...	1	...	...	...	...	...	.	...	...	1	...	1	...	1
Ague ...	...	...	.	...	...	...	..	...	...	..	...	...	...	...	..	...	...	...	...	2	...	2
Albuminuria ...	...	..	..	.	...	...	...		...	...	...	...	..	...	...	.	...	...	...	1	.	1
Diabetes ...	...	..	...			...	...	...	..	...	...	...	...	...	..	.	...	...	...	1	...	1
Hernia ...	...	...	..	...	...	...	.	...	..	...	...	...	...	..	...	.	..	...	...	1	...	1
Heart disease ...	...	..	...	..	..		...	...	.	..	...	..	...	...	...	.	...	...	...	1	...	1
Lipoma ...	...	.		...	...	...	...	...	.	...	...	...	...	...	...	..	...	...	.	1	.	1
Pimosis ...	...	..	...	...	..	...	..	...	...	...	...	...	.	...	...	...	.	...	...	1	...	1
Syncope ...	...	...	.	...	...		...	...	..	...	...	...	...	...	...	..	.	...	...	1	...	1
Starvation ...	...	...	..	..	...	...	...	...	...	...	...	...	...	..	..	...	...	...	.	1	..	1
Scorpion sting ...	...	...	...	...	...	..	...	...	...	..	...	..	...	...	..	...	..	...	...	1	...	1
Rupture ...	...	...	...	.	...	...	..	..	...	...	...	...	...	...	...	...	..	...	...	1	...	1
Total of other causes ...	1	..	1	1	14	18	84	120	1	4		..	..	...	..	...	101	143	244	220	24	...
Total Deaths ...	1	..	3	1	19	25	139	185	2	4	...	..	..	..	.	.	164	215	379	367	12	...
Total Births ..	1	1	1	1	4	6	45	42	3	2	...	...	...	...	..	..	54	52	106	113	..	7

Abstract Mortuary Return and the Percentage of Births and Deaths on the estimated population of 69,447.

Classes	Births		Difference		Percentage		Deaths		Difference		Percentage		Remarks
	Mar. 1906	Feb. 1906	Increase	Decrease	Mar. 1906	Feb. 1906	Mar. 1906	Feb. 1906	Increase	Decrease	Mar. 1906	Feb. 1906	
Hindus	87	102	...	15	0·12	0·14	324	306	18	...	0·46	0·44	There were 379 deaths during the month, of which 14 were from small-pox, 29 from fevers, 42 from bowel-complaints, 42 from plague, 8 from childbirth and 244 from all other causes as detailed in the statement.
Mahomedans ...	10	6	4	...	0·01	0·008	44	47	...	3	0·06	0·05	
Native Christians ...	5	3	2	...	0·007	0·004	6	13	...	7	0·008	0·01	
Other classes ...	...	...	...	...	...	...	...	...	...	...	...	...	
Jains ..	..	...	..	...	...	..	...	...	...	...	..	..	
Parsis ...	...	...	...	...	...	...	...	...	...	..	...	...	
Europeans ..	2	1	1	...	0·002	0·001	1	...	1	...	0·001	...	
Eurasians ...	2	1	1	...	0·002	0·001	4	1	3	...	0·005	0·001	
Total ...	106	113	...	7	0·15	0·16	379	367	12	..	0·54	0·52	

Age.

Classes	Total deaths	Under 1 year	2 to 5 years	6 to 12 years	12 to 20 years	21 to 30 years	31 to 40 years	41 to 50 years	51 to 60 years	Above 60 years
Hindus	324	83	32	31	23	37	13	34	15	56
Mahomedans ..	44	6	8	3	2	6	3	4	5	7
Native Christians ...	6	...	...	...	...	...	3	2	1	...
Other classes ...	...	...	...	...	...	...	...	...	...	...
Jains ...	...	...	...	..	...	...	...	...	...	...
Parsis ...	...	...	...	...	..	...	...	..	...	...
Europeans ...	1		...	...	...	...	...	...	1	...
Eurasians ...	4	2	2	...	...	...	...	..	...	..
Total ...	379	91	42	34	25	43	19	40	22	63

Progress report for the month of March 1906.

Particulars	Estimate	Expenditure during the month	Expenditure from 1st July	Total	Balance
VIII. PUBLIC WORKS.		Rs a. p.	Rs. a. p.	Rs. a. p.	Rs. a. p.
(a) Supervision	5,964				
Establishment		327 0 0	3,578 7 4	3,905 7 4	.....
Contingent charges		4 1 9	31 14 7	36 0 4	.....
Total ...		331 1 9	3,610 5 11	3,941 7 8	2,022 8 4
(b) Special repairs of roads	31,000				
Miller road		261 14 0	.....	261 14 0	....
Mysore road		202 9 0	384 8 11	587 1 11	.....
Korcharpalya road		90 15 10	382 12 9	473 12 7	.....
Hosur road		307 7 4	894 15 10	1,202 7 2	.....
Race-Course road		275 0 1	2,913 4 2	3,188 4 3	.....
Maternity road		22 0 8	244 9 8	264 10 4	....
New lane between Choulgalli and Annamma temple road		10 0 0	.....	10 0 0	.....
Anjaneya temple road in continuation of Sunnakal road		212 10 0	.....	212 10 0	.....
Mission road		47 4 0	592 5 4	639 9 4	.....
Nagarthpet road		125 5 8	.....	125 5 8	.....
New lane between Mohadeen Sab street and Revannapet		11 4 0	.....	11 4 0	.....
As [illegible]nt		.....	9,266 10 2	9,266 10 2	.....
Total ...		1,566 6 7	14,679 2 10	16,245 9 5	14,754 6 7
(c) Roads repairs, ordinary	11,000				
Pay of Engine-driver...		30 0 0	235 0 0	265 0 0	.....
Pay of permanent gang coolies		533 14 2	3,549 15 11	4,083 14 1	.....
Repairing Cubbonpet cross lane No. 13 ...		50 0 0	.....	50 0 0	.....
Do do No. 12 ..		42 8 0	.....	42 8 0	.....
Do Kankanhalli road		60 5 11	159 7 0	219 12 11	.....
Cubbonpet cross road No. 11		40 0 0	.....	40 0 0	.....
Repairing lane in continuation of Patnulpet		13 9 6	.....	13 9 6	.....
Collecting materials for II and IV Divisions.		72 3 0	.....	72 3 0	.....
Repairing III Main road, new Tharagupet ...		33 8 9	25 13 0	59 5 9	.....
As per previous payment		.....	1,996 11 3	1,996 11 3	.....
Total ...		876 1 4	5,966 15 2	6,843 0 6	4,156 15 6
(d) Drains, original [illegible]	...				
Constructing V-di[illegible] 79 [illegible]ane between Mohadeen Sab [illegible] Revannapet...		124 14 6	.....	124 14 6	.....
Constructing cross drain in Maldarpet ...		14 1 5	111 5 1	125 6 6	.....
Do V-drain in I Main road Munireddipalya		180 5 9	.....	180 5 9	.....
Constructing V-drain in Siddannagalli ..		127 5 5	.....	127 5 5	.....
Do do in new lane between Choulgalli and Annamma temple road ..		163 6 1	.....	163 6 1	.....

Progress report for the month of March 1906—*contd.*

Particulars	Estimate	Expenditure during the month	Expenditure from 1st July	Total	Balance
		Rs. a p.	Rs. a. p.	Rs. a. p.	Rs. a. p.
Constructing V-drain up to Reddy Butchannagalli		187 11 8	.....	187 11 8	.....
Constructing V-drain in Basavannagudi lane No. 3, III Division		51 12 4	...	51 12 4	.....
Constructing V-drain in new lane No. 4 at Kunchigarpet		113 15 8	.....	113 15 8	.....
Providing storm water drain to Kemmangundi road		56 12 9	675 14 2	732 10 11	.....
Constructing V-drain in new lane at Metkal road		107 5 4	.....	107 5 4	.....
Constructing V-drain in new lane No. 2 at Kunchigarpet		112 11 11	.....	112 11 11	.....
Constructing V-drain in III road, Munireddipalya		397 14 4	.....	397 14 4	.....
As per previous payment		.....	1,346 4 9	1,346 4 9	.....
Total ...		1,638 5 2	2,133 8 0	3,771 13 2	—3,771 13 2
(*e*) Drains, repairs	4,542				
Pay of drain Khalihaths		93 3 0	680 14 4	774 1 4	.....
Repairing drains in the City		168 8 6	.....	168 8 6	.....
Do in Maldarpet		42 6 5	.....	42 6 5	.....
As per previous payment		.....	563 6 0	563 6 0	.....
Total ...		304 11 1	1,244 4 4	1,548 6 3	2,993 9 9
(*h*) Buildings, original	2,000				
Improving old slaughter-house		10 6 2	286 3 8	296 9 10	.....
As per previous payment		.....	73 13 0	73 13 0	.....
Total ...		10 6 2	360 0 8	370 6 10	1,629 9 2
(*i*) Buildings, repairs	3 500				
Providing a chain, etc. to toll-gate, Munireddipalya.		18 13 0	.....	18 13 0	.....
Repairing mutton stalls in mutton market...		24 13 0	113 14 9	138 11 9	.....
As per previous payment		.....	1,378 14 11	1,378 14 11	.....
Total ...		43 10 0	1,492 13 8	1,536 7 8	1,963 8 4
(*j*) Watering roads and plants	1,500				
Watering avenue plants in Chamarajpete ...		21 0 0	166 13 11	187 13 11	.....
Do do in Fort		7 0 0	55 8 8	62 8 8	.....
Do do in I Division ...		6 8 0	53 4 4	59 12 4	.....
Do do in IV Division ...		6 4 0	55 12 3	62 0 3	.....
Preparing tree-guards in Fort		40 0 0	.....	40 0 0	.....
Watering roads in VII Division ...		52 13 9	6 7 3	59 5 0	.....
Do do in VI Division ...		82 15 8	62 7 6	145 7 2	.....
Do Lal-Bagh road		58 0 0	106 7 8	164 7 8	.....
Do City Railway cross road ...		13 11 8	25 9 8	39 5 4	.....
Do Post Office and Avenue roads ...		45 3 6	34 0 10	[illegible] 4 4	.....
Do Race-Course road		65 3 0	88 10 4	153 13 4	.....
Do Maternity and other roads ..		55 1 7	74 8 6	129 10 1	.....
Do roads in II and III Divisions ...		58 0 0	41 2 6	99 2 6	.....
As per previous payment		.....	.....	.....	.....
Total ...		511 13 2	770 13 5	1,282 10 7	217 5 5

Progress report for the month of March 1906—*concld.*

Particulars	Estimate	Expenditure during the month	Expenditure from 1st July	Total	Balance
		Rs a. p.	Rs. a. p.	Rs. a. p.	Rs. a. p.
(*k*) Other works, original	500				
As per previous payment ...		...	16 6 11	16 6 11	.....
Total ...		.....	16 6 11	16 6 11	483 9 1
(*l*) Other works, repairs	1,500				
Repairing cenotaph		28 4 1	.....	28 4 1	.....
Do Arab compound wall		43 7 7	270 0 9	313 8 4	.....
Do tunnels in I Division		49 11 10	.....	49 11 10	.....
Fixing upright slabs to Municipal garden		90 4 10	.....	90 4 10	.....
As per previous payment		.....	786 5 10	786 5 10	.....
Total ...		211 12 4	1,056 6 7	1,268 2 11	231 13 1
(*m*) Compensation	3,000				
Paid to Bombore Narasinga Rao for vacant land No. 155 in Huriyopet		51 5 4	.....	51 5 4	.....
Paid to Mahomed Hyrulla Sab Mekkie for land acquired for opening out conservancy lane in Nesyada Pillanna galli ...		13 0 11	.....	13 0 11	.....
Paid to Dod Savanda Chetty for house No. 7 in Dandina Subbi street		58 13 4	.....	58 13 4	.....
Paid to Puttamma for house No. 6 in do ..		50 0 0	.....	50 0 0	.....
Do Subbanna for house No. 8 in do ..		22 8 10	.....	22 8 0	.....
Do Yellasettiappa for building No. 4 in Kantin Krishnappa galli ...		35 0 0	.....	35 0 0	.....
Do Mariappa for house No. 385 in Taluk Cutcherry road		150 0 0	.....	150 0 0	.....
Do S. Narasimhaiya for house No. 11 in Dodmavalli ...		12 0 0	.....	12 0 0	.....
As per previous payment		.....	1,978 3 6	1,978 3 6	.....
Total ...		392 12 5	1,978 3 6	2,370 15 11	629 0 1
(*n*) Tools and plant	1,000	.....	407 8 7	407 8 7	592 7 5
(*o*) Reserve	500				
Pay of Dharmambudhi tank watchman ...		6 0 0	3 7 8	9 7 8	.....
As per previous payment		.....	38 9 7	38 9 7	.....
Total ...		6 0 0	42 1 3	48 1 3	451 14 9
(*p*) Roads, original	1,249				
Pay of Police guards over convict-labour ...		82 8 0	552 10 6	635 2 6	.....
Total ...		82 8 0	552 10 6	635 2 6	613 13 6
(*r*) Special works	10,000				
Opening out conservancy lane, (C.D. cross) in Subbramanya galli, III Division		.....	311 5 4	311 5 4	.....
Opening out conservancy lane, E. F. in Subbramanya galli, III Division ...		160 0 0	1,195 1 11	1,355 1 11	.....
Total ...		160 0 0	1,506 7 3	1,666 7 3	8,333 8 9
VIII (*b*) Removing congestion	10,600				
Paid to Ramashesha Sastri for house No. 39 in Pattabhi Ramasastri street ...		50 0 0	.....	50 0 0	.....
As per previous payment		.....	141 4 5	141 4 5	.....
Total ...	..	50 0 0	141 4 5	191 4 5	10,408 11 7
Grand Total ...	87,855	6,184 14 10	35,959 1 0	42,143 15 10	45,711 0 2

CITY MUNICIPAL ENGLISH SCHOOL, BANGALORE.

Return of class attendance and fee collections for the month of March 1906.

Class	No. on roll on first of month	No. admitted during the month	No. withdrawn during the month	No. on roll on last of month				Average attendance	Monthly fee	Collection during the month				Fees in arrears	Remarks
				Paying full fee	Half free	Free	Total			Entrance fee	School fee	Arrears	Total paid into the Treasury		
									Rs. a. p.	Rs. a. p.	Rs. a. p	Rs. a. p.	Rs. a. p.	Rs a. p.	
Form III A	25	4	...	18	9	2	29	25·20	1 8 0	6 0 0	33 12 0	6 12 0	46 8 0	...	
Do B	31	...	1	27	2	1	30	28·10	1 8 0	...	42 0 0	...	42 0 0	...	
Do C	31	...	1	27	1	2	30	25·80	1 8 0	...	41 4 0	...	41 4 0	..	
Form II A	27	...	1	22	1	3	26	23·88	1 4 0	...	26 14 0	...	26 14 0	1 4 0	
Do B	32	2	1	20	7	6	33	30·33	1 4 0	2 8 0	29 6 0	0 10 0	32 8 0	...	
Do C	38	2	1	34	3	2	39	31·37	1 4 0	2 8 0	44 6 0	3 12 0	50 10 0	...	
Form I A	36	4	(a) 1	33	3	3	39	34·50	1 0 0	4 0 0	35 8 0	1 0 0	40 8 0	...	(a) One paid and left
Do B	35	2	...	31	..	6	37	34·54	1 0 0	2 0 0	31 0 0	...	33 0 0	...	
Do C ...	37	...	1	24	9	3	36	31·60	1 0 0	...	28 8 0	...	28 8 0	..	
Class Second A ...	22	2	1	21	...	2	23	19·60	0 12 0	1 8 0	15 12 0	...	17 4 0	..	
Do B ...	22	1	...	22	..	1	23	20·08	0 12 0	0 12 0	16 8 0	...	17 4 0	...	
Do C ...	23	...	...	22	1	...	23	20·35	0 12 0	..	16 14 0	..	16 14 0	...	
Class First A ...	20	2	...	21	1	...	22	19·45	0 8 0	1 0 0	10 12 0	...	11 12 0	...	
Do B ...	5	1	...	6	...	...	6	4·50	0 8 0	0 8 0	3 0 0	1 0 0	4 8 0	...	
II A.-H. Class	6	...	1	...	5	...	5	3·30	0 12 0	...	1 14 0	...	1 14 0	..	
I A.-H. Class ..	5	...	...	..	4	1	5	3·78	0 8 0	...	1 0 0	..	1 0 0	...	
Total ...	395	20	9	328	46	32	406	355·78	...	20 12 0	378 6 0	13 2 0	412 4 0	1 4 0	Percentage of attendance=87·63.

CITY MUNICIPAL KANNADA SCHOOL, BANGALORE.

Return of class attendance and fee collections for the month of March 1906.

Class	No. on roll on first of month	No. admitted during the month	No. withdrawn during the month	No. on roll on last of month: Paying full fee	Half free	Free	Total	Average attendance	Monthly fee	Collection during the month: Entrance fee	School fee	Arrears	Total paid into the Treasury	Fees in arrears	Remarks
									Rs. a. p.	Rs. a. p.	Rs. a. p.	Rs. a. p.	Rs. a. p.	Rs. a. p.	
V ...	11	1	...	8	1	3	12	10	0 4 0	0 4 0	2 2 0	...	2 6 0	...	
IV ...	5	1	...	5	...	1	6	4	0 4 0	0 4 0	1 4 0	..	1 8 0	...	
III ..	11	2	..	13	...	...	13	11	0 3 0	0 6 0	2 7 0	0 3 0	3 0 0	..	
II A ..	9	1	1	7	1	1	9	7	0 3 0	0 3 0	1 6 6	...	1 9 6	..	
B ...	10	...	...	10	...	...	10	9	0 3 0	...	1 14 0	...	1 14 0	..	
I A ...	6	3	..	9	...	...	9	7	0 2 0	0 6 0	1 2 0	0 2 0	1 10 0	..	
B ...	9	1	1	8	...	1	9	7	0 2 0	0 2 0	1 0 0	0 2 0	1 4 0	...	
P. A .	6	...	...	6	...	...	6	6	0 2 0	...	0 12 0	..	0 12 0	...	
B ...	6	2	1	7	...	...	7	7	0 2 0	0 4 0	0 14 0	0 2 0	1 4 0	...	
C ...	2	2	...	4	...	...	4	1	0 2 0	0 4 0	0 8 0	...	0 12 0	..	
D ...	8	2	...	10	...	...	10	7	0 2 0	0 4 0	1 4 0	...	1 8 0	...	
Total ...	83	15	3	87	2	6	95	76	...	2 5 0	14 9 6	0 9 0	17 7 6	...	=80 %

MUNICIPAL A.-V. SCHOOL, CHAMARAJENDRAPETE, BANGALORE.

Return of class attendance and fee collections for the month of March 1906.

									Rs. a. p.	Rs. a. p.	Rs. a. p.	Rs. a. p.	Rs. a. p.	Rs. a. p.	
English II ...	22	1	*2	13	4	4	21	19	0 12 0	0 12 0	12 0 0	...	12 12 0	...	*One paid and left
Do I ...	17	3	1	14	1	4	19	17	0 8 0	1 8 0	7 4 0	..	8 12 0	...	
Kannada II ...	23	1	...	21	...	3	24	22	0 3 0	0 3 0	3 15 0	...	4 2 0	...	
Do I ...	19	1	3	13	1	3	17	14	0 2 0	0 2 0	1 11 0	..	1 13 0	..	
Infant B ...	25	5	1	25	...	4	29	22	0 2 0	0 10 0	3 2 0	...	3 12 0	..	
Do A ...	35	3	2	32	...	4	36	28	0 2 0	0 6 0	4 0 0	...	4 6 0	..	
Total ...	141	14	9	118	6	22	146	122	...	3 9 0	32 0 0	...	35 9 0	...	=83·5%

Statement showing the balance of materials at sites of roads for the month of March 1906.

Names of roads	Furlong	Balance			Receipts			Total			Issues			Balance			Remarks
		Laterite	Quarry metal	Gravel	Laterite	Quarry metal	Gravel	Laterite	Quarry metal	Gravel	Laterite	Quarry metal	Gravel	Laterite	Quarry metal	Gravel	
Railway approach road	...	21	...	...	...	...	...	21	...	...	2	...	...	19	...	...	
Miller road	..	...	...	...	...	110	$46\frac{2}{3}$	...	110	$46\frac{2}{3}$	...	110	$46\frac{2}{3}$	...	...	...	
Hosur road	10	...	30	15	...	$79\frac{1}{9}$	29	...	$109\frac{1}{9}$	44	...	$109\frac{1}{9}$	44	...	...	...	
Koracharpalya road	1	...	8	20	...	...	...	...	8	20	...	...	...	...	8	20	
Mission road	1	...	...	5	...	...	...	...	...	5	...	...	5	...	...	...	
Kankanhalli road	4	...	73	24	...	...	...	...	73	24	...	73	24	...	...	...	
Nagarthpet road	3	...	...	...	...	$60\frac{7}{9}$	...	...	$60\frac{7}{9}$	...	...	...	...	..	$60\frac{7}{9}$	...	
Kemmangundi road	3	...	...	3	...	...	...	...	...	3	...	...	...	...	...	3	
Taluk Cutcherry road	3	...	...	9	...	...	...	...	...	9	...	...	...	.	...	9	
Do	1	...	...	11	...	...	...	...	...	11	...	..	...	..	...	11	
Vegetable market	1	...	5	...	...	...	...	...	5	...	...	...	...	...	5	...	
Gundopanthulu road	...	...	5	...	...	...	...	...	5	...	...	..	...	..	5	..	
Woollen Mill road	...	...	...	3	...	...	...	...	...	3	...	..	...	...	...	3	
Do	...	...	...	4	...	...	...	...	...	4	...	...	...	...	..	4	
Muniyatemple lane	...	...	...	15	...	...	...	...	...	15	...	...	...	...	...	15	
Mysore road	10	...	20	...	...	...	...	...	20	..	...	...	...	...	20	..	
Fort Rampart road	7	...	...	45	...	...	...	...	...	45	...	...	...	...	...	45	
Fort E Street	...	...	...	..	...	...	25	...	...	25	...	...	...		...	25	
Fort C lane	..	...	...	...	...	...	20	...	...	20	...	...		...	...	20	
Fort Main road	3	...	10	..	...	...	...	...	10	...		...		...	10	...	
Do	1	...	...	20	...	...	...	...	..	20	...	...	...	...	...	20	
V. Main road	2	...	...	...	...	70	35	...	70	35	...	...	...	...	70	35	
Total ..	...	21	151	174	...	$319\frac{8}{9}$	$155\frac{2}{3}$	21	$470\frac{8}{9}$	$329\frac{2}{3}$	2	292_9	$1'9\frac{2}{8}$	19	$178\frac{7}{9}$	210	
DEPOT MATERIALS.																	
Ulsoor Gate Depot	...	$7\frac{1}{2}$	9	..	...	...	...	$7\frac{1}{2}$	9	...	...	3	...	$7\frac{1}{2}$	6	...	
Palace-Upparli [illegible] road	...	...	3	..	...	...	...	...	3	...	...	3	...	...	...	...	
[illegible] road	..	...	8	...	...	...	...	...	8	...	...	...	...	...	8	...	
Sankey road	...	...	$10\frac{1}{2}$	...	...	...	...	...	$10\frac{1}{2}$	...	...	$10\frac{1}{2}$	..	...	...	..	
Yelahanka gate	..	10	...	...	...	...	...	10	...	.	...	...	...	10	...	...	
Avenue road	12	9	...	...	...	...	..	9	...	...	2	...	...	7	...	...	
Race-Course road	8	50	...	...	...	35	...	50	35	...	...	...	..	50	35	...	
Agrahara tank bund road	...	...	25	..	...	...	...	...	25	...	...	5	...	...	20	...	
Yelahanka gate	...	..	.	...	...	30	...	...	30	...	...	...	...	...	30	...	
Lal-Bagh road	1	23	...	...	...	...	...	23	...	...	...	...	...	23	5	..	
Fort West Gate	...	...	..	36	...	20		..	20	36	...	15	6	...		30	
	...	$99\frac{1}{3}$	$55\frac{1}{2}$	36	...	85	...	$99\frac{1}{2}$	$140\frac{1}{2}$	36	2	$36\frac{1}{2}$	6	$97\frac{1}{3}$	104	30	
Total ...	...	$120\frac{1}{3}$	$206\frac{1}{2}$	210	...	$404\frac{8}{9}$	...	$120\frac{1}{2}$	$611\frac{0}{18}$	$365\frac{2}{3}$	4	$328\frac{11}{18}$	$125\frac{11}{32}$	$116\frac{1}{9}$	$282\frac{1}{9}$	240	

List of recipients of money doles in the Langarkhana of the Bangalore City during the month of March 1906.

Brahmins			Mahomadans			Other Hindus			Total		
M.	F.	T.	M.	F.	T.	M.	F.	T.	M.	F.	T.
28	104	132	64	80	144	95	68	163	187	252	439

Statement showing rewards paid for destruction of Cobras, etc., during the month of March 1906.

Particulars	No.	Rate	Amount
		Rs. a. p.	Rs a. p.
Destruction of cobra	1	0 6 0	0 6 0
Do of a mad dog	1	1 0 0	1 0 0
Total ...		.....	1 6 0

Audit Report for March 1906.

We have no remarks to offer

BANGALORE; 18*th April* 1906.

(Sd.) D. VENKATARAMAIYA.
(Sd.) B. APPAJAIYA.

2. Sub-Committee's report suggesting revision of establishment under several branches of the City Municipal service with a proposition statement embodying their proposals in order to introduce reform in the working of the Municipality, called for in para 13 of Government Order the report of the Municipal Financial Committee.

Resolution.—Deferred.

3. Remission statements for arrears of Municipal taxes amounting to Rs. 143-4-0 and of scavenging cess amounting to Rs. 115-1-11, respectively, on account of death, desertion, etc., of the parties concerned.

Resolution.—Sanctioned.

4. General and Revenue Secretary's docket No. 9799—Ml. (204-05)-2, dated the 22nd March 1906, regarding the transfer of the two dispensaries in the new extensions to the Municipality.

Resolution.- The two extensions are new and the receipts from them are small and therefore it is premature to undertake the maintenance of the two dispensaries.

5. Consideration of the question of granting proportionate half remission of taxes amounting to Rs. 856-8-6 on the Mysore Spinning, Weaving and Manufacturing Company, Ld., for a period of two years and ten months and nine days, when the Mills had stopped work.

Resolution.—The Board (Mr. Gangiah dissenting) resolve that no remission can be made or any deviation allowed from the Regulations in this instance.

6. Proposal to revise schedule of articles liable to Octroi duty with a view to increase Municipal revenue as recommended by the Finance Committee in their report to Government No. 253, dated the 19th December 1904.

Resolved that the Board are unanimously opposed to the additional items of dutiable articles to be brought in the Schedule as recommended by the Finance Committee and see no objection to the removal of bran, oats and chaff from it, as recommended.

7. Consideration of the question of receiving Octroi duty on the net value of piece-goods after deducting discount from the gross total amount mentioned on the Invoices.

Resolution.—Adjourned for consideration to Thursday the 26th instant at 5 P.M.

PROCEEDINGS OF AN ADJOURNED ORDINARY MEETING OF THE MUNICIPAL COMMISSIONERS FOR THE CITY OF BANGALORE, HELD AT THEIR OFFICE PREMISES AT 5 P.M. ON THURSDAY THE 26TH APRIL 1906.

President—Present.

Ex-Officio Members.

Absent—The Senior Surgeon and Sanitary Comr. with the Govt. of Mysore.
Do —The Executive Engr., Bangalore Dn.
Absent—The Principal, Central College.
Present—The Amildar, Bangalore Taluk.

Municipal Commissioners.

Present—C. Krishna Murti, Esq.

I—*Palace Division.*
Present—I. Bronson, Esq.
Absent—Aga Abdulla Saheb, Esq.

II—Bale Pete Division.
Absent—B. Gangiah, Esq.
Do —D. Venkataramaiya, Esq., B.A.

III—Manavarte Pete Division.
Absent—Veerabhadra Chetty, Esq.
Do —B. K. Garudachar, Esq.

IV—Alsur Pete Division.
Absent—Boppannanavara Basanna, Esq.
Present—N. Ramabhadraiya, Esq.

V—Nayarth Pete Division.
Present—B. V. Ramaswami Chetty, Esq., B.A.
Do —B. Oosman Khan, Esq.

VI—Lal-Bagh Division.

Absent—J. Cameron, Esq., F.L.S.
Do —D. B. Ramachendra Mudaliar, Esq.

VII—Fort Division.

Present—B. Appajappa, Esq.
Absent—J. W Hardy, Esq.

VIII—Basavangudi Division.

Absent—M. K. Krishna Murti Rao, Esq.
Do —Khader Mohadin Meccai, Esq.

IX—Malleswaram Division.

Absent—S. Venkatarangaiengar, Esq.
Do —P. R. Subramanya Sastri, Esq., B.A.

1. Consideration of the question of receiving Octroi duty on the net value of piece-goods after deducting discount from the gross total amount mentioned on the Invoices.

Resolved that the Octroi duty on piece-goods may be assessed and levied on the gross invoiced value of the goods. Four voting for and three against—the President not voting.

Notice dated the 21st May 1906.

It is hereby notified for the information of the public that the marginally noted sites in the Basavangudi and Malleswaram Extensions of the Bangalore City will be sold by public auction on the spot at 8 A.M., on the 11th and 12th June 1906 respectively.

	Measurement.	Date of sale.
Basavangudi Extension, Block No. 4. Sites Nos. 180, 181, 182, 183, 184, 185, 186, 187, 188, 189, 190, 191, 192, 193, 194, 195, 196, 197, 198 and 199.	100×30	11-6-1906.
Malleswaram Extension, Hindu Block 517, 518, 519, 520 and 521.	150×30	12-6-1906.

2. The purchaser should deposit at the time of sale twenty-five per cent of the purchase money and pay the remainder within fifteen days from the date of sale, failing which, the land will be resold at the risk of the first purchaser.

3. The undersigned reserves the power of accepting and refusing the highest bid.

4. As to the other conditions of sale, the public are referred to the detailed notice issued in this connection in the kanarese portion of the Gazette.

Notice dated 22nd May 1906.

It is hereby notified for the information of the public that re-election of Municipal Commissioners for the II and III Divisions in the City, will be held by ballot at the places and on the dates specified below from 8 to 10 A.M. and from 3 to 5 P.M., under the superintendence of the President, and that persons eligible to vote as published in the *Mysore Gazette*, dated 1st March 1906 and dated 13th April 1906, are therefore requested to attend on the dates for the purpose:—

Name of Division	Name of place	Date fixed	No. to be elected
II. Balepete Division	Balepete Police Station	3rd July 1906 (Tuesday).	2
III. Manavartepete Division	Government Girls' School, Chikpete ...	5th July 1906, (Thursday).	

A. S. NAGAVKAR,
President.

MYSORE CITY MUNICIPALITY.

PROCEEDINGS OF THE ORDINARY MEETING OF THE MUNICIPAL COMMISSIONERS FOR THE CITY OF MYSORE, HELD IN THE RANGACHARLU MEMORIAL HALL AT 8 A.M., ON SATURDAY THE 28TH APRIL 1906.

PRESENT.

1. The President.
2. The Vice-President.
3. The Civil Surgeon, Mysore.
4. The Principal, Maharaja's College.
5. Mr. M. Venkatakrishnaiya.
6. „ K. Chendrasekharaiya.
7. „ Amble Annaiya Pandit.
8. „ N. Srikantaiya.
9. Mr. Narasimhaswami.
10. „ Krishnappaji Urs.
11. „ M. C. Ranga Iyengar
12. „ A. Subbanna.
13. „ Anantharajaiya.
14. „ Madappa.
15. „ Hussain Ali Baig Saheb.
16. „ Tiruvengada Mudaliar.

ABSENT.

1. The Executive Engineer, Mysore Dn.
2. The Amildar, Mysore Taluk.
3. Mr. Syed Mohadeen Saheb.
4. „ Rahimatulla Ahmed Sait.

Plague and Mortuary return for the month of March 1906.

Mohallas	Number of births	Average births in the previous three years for the corresponding month of March	Deaths from—						Average deaths in the previous three years for the corresponding month of March					
			Plague	Cholera	Small-pox	Fever	Other causes	Total	Plague	Cholera	Small-pox	Fever	Other causes	Total
Lashkar ...	23	25	...	..	...	3	35	38	3	..	6	...	33	42
Mandi ...	15	24		...	...	...	27	27	4		4	2	29	39
Devaraj ...	11	9	...	...	1	...	29	30	2	..	3	1	22	28
Chamraj ...	29	37	.	...	...	3	17	20	2	..	3	2	17	24
Krishnaraj ...	17	13	...	..	...	4	19	23	1	...	5	2	19	27
Fort ...	4	5	.	...	...	...	3	3	...		...	1	4	5
Nazarbad ...	10	7	.	...	...	1	12	13	1	.	2	2	7	12
Isolation Hospital	.	...	...	...	...	1	3	4	6	...	..	....	....	6
Total ...	109	120	...	...	1	12	145	158	19	..	23	10	131	183

Total number of births and deaths from 1st April to 6th April 1906.

Mohallas	Number of births	Deaths from—					
		Plague	Cholera	Small-pox	Fever	Other causes	Total
Lashkar ...	4	..	...	1	...	11	12
Mandi ...	2	...	...	...	...	4	4
Devaraj ...	5	..	...	...	.	7	7
Chamraj ...	9	...	.	...	1	3	4
Krishnaraj ...	4	...	..	...	1	4	5
Fort ...	1	...	...	..	1	1	2
Nazarbad ...	1	...	...	...	..	1	1
Isolation Hospital .	...	..	..	..		1	1
Total ..	26	...	...	1	3	32	36

The following are the statistics for the month of March 1906 :—

Her Highness the Maharani's Female Hospital.

IN-PATIENTS.

Number of patients treated during the month	54
Number confined	20
Number of patients treated with instruments	3
Number treated for other diseases	31

OUT-PATIENTS.

Number of patients remained on the last day of February 1906 ...	71
Number admitted during February 1906	1,014
Total treated	1,085

Dispensaries.

Names of dispensaries	Number of patients treated during the month	Number cured and discharged	Number absent	Di	Remaining	Average daily sick
Old Agrahar Dispensary ...	2,056	1,889	...	1	166	145·83
Nazarbad do ...	1,227	1,131	13	...	83	82·61
Erangere do ...	1,366	1,168	60	4	104	112·97
Indigenous Hospital (Karnatic) ...	2,941	2,760	17	...	164	149·22
Do (Unani) ..	2,347	2,206	10	...	131	118·51
Nikhilarogahari Dispensary ..	1,831	1,757	...	...	15	59

Midwifery.

The number of labour cases attended by the midwife attached to Old Agrahar Dispensary	10
Do do Erangere do	7

Rainfall.

For March 1906	0—95
Do 1905	.....

I. Consideration of accounts of receipt and expenditure with the Auditor's report and other statistics for March 1906 and Comptroller's audited accounts for November and December 1905.

Recorded.

II. Government Proceedings No. 9645-7—Ml. (455-05)-3, dated 17th March 1906, informing that the Deputy Commissioner's letter regarding the inattention of the Board of Trustees for the Improvement of the City of Mysore on certain points has been forwarded to the Chairman for such remarks as he may have to offer on the points referred to through the Chief Engineer, who will, after proper investigation, submit his report.

Recorded.

III. Revenue and General Department Secretary's docket No. 9855—Ml. (466-05)-2, dated 23rd March 1906, requesting to specify the place to which the Octroi office is proposed to be removed.

Resolved that should the Government decide on the Sivaram Pete School being built elsewhere, the Octroi compound be built on the vacant site next the market, that being central and well suited for these.

IV. President's memo, dated 28th March 1906, proposing to transfer the Mysore Water-supply Works to the management of the Public Works Department, for the reasons stated in the memo.

Resolved that the present system continue.

V. President's memo, dated 28th March 1906, proposing to have a separate main pipe line to the houses on the Yelwal road, direct from the reservoir and running behind their houses instead of in front.

Resolved that this question cannot be considered at present.

VI. President's memo, dated 28th March 1906, proposing to construct a cart-stand near the present Octroi katte, on the Yelwal road.

Resolved that a small piece of land be acquired behind the Octroi katte for a cart-stand.

VII. President's memo, dated 28th March 1906, proposing to postpone the sale of old Octroi office building site in Lashkar Mohalla for some time hence for the reasons given in the memo.

Resolved that the sale of these sites be postponed until the work of filling in these pits and levelling the ground be finished.

VIII. Government Proceedings No. 10068—Ml. (428-05)-2, dated 29th March 1906, informing that in the absence of express statutory authorization, the distraining officer cannot break open the door of a house which contains the property proposed to be distrained.

Recorded.

IX. Deputy Commissioner's memo No. 3091, dated 26th March 1906, forwarding copy of Revd. Sawday's letter regarding the handing over the Santhe Pete Boys' School and the site required for the construction of a new school in front of Victoria Girls' School at Sivaram Pete.

Recorded and Government reply as to the extent of the site to be given to be awaited.

X. Senior Surgeon's docket No. 5452, dated 29th March 1906, anent the Sanitary Inspector required for the City and correspondence connected therewith.

Resolved that on receipt of Government sanction to the budget, the question of Sanitary Inspector and Assistant be discussed.

XI. Copy of the Proceedings of the Improvement Trust Board, dated 28th February 1906. Recorded.

XII. Remission statements of irrecoverable arrears.

Resolved that as the sum of Rs. 3,868-1-0 is irrecoverable, it be remitted.

XIII. Docket No. 3516-228, dated the 2nd April 1906, from the Honorary Secretary to the Deaf, Dumb and Blind School, Mysore, requesting permission to construct a stall on the triangular piece of ground on the school premises.

Resolved that the Board cannot allow the erection of this building on the site proposed.

XIV. Vice-President's memo proposing that a Langarkhana may be established in the old woodyard building to house the infirm and incapacitated poor persons.

Resolved that this proposition be carried out and that the most suitable place is the present isolation hospital, which is admirably adopted for the purpose, and on receipt of Government sanction that a committee be formed for carrying out this scheme.

XV. Docket No. 345, dated 18th April 1906, from the Engineer in charge of the First Maharajakumari's Mansion in regard to the widening and improving the road that runs below the Kukkarhalli tank bund.

Resolved that the Board is willing to contribute Rs. 500 for the widening of this road to 9 yards, provided the work is carried out to the satisfaction of the Board.

XVI. Application from Mr. B. Vasudeva Rao, retired Deputy Amildar, claiming remission of water-tax for the current year owing to the intermittent supply of water given in the City.

Resolved that this question requires further consideration and that a sub-committee consisting of Messrs. Rangiengar, Tiruvengada Mudaliar, Madappa, the Vice-President and Chendrasekharaiya be formed and requested to draw up proposals as to what portions of the City are deserving of consideration in the present year of drought.

XVII. Vice-President's memo *in re* the appointment of a Collector to the City.

Resolved that as the establishment for collection remains the same as it was in 1898, when the collection was Rs. 88,000, and the collection has now increased to Rs. 1,54,000, the Board is of opinion that extra establishment is now required and that a Collector on Rs. 50 per mensem be appointed in addition to the present establishment.

XVIII. Assistant Sanitary Inspector's report dated 20th April 1906, reporting the number of scavengers and carts required for the daily conservancy of the Chamraj Mohalla at present, and papers connected therewith.

Resolved that for the present the hamlet of Holageri, Wantikoppal, Padavarahalli and Kannegowdankoppal be excluded from the operation and that an establishment of twenty totis and ten hand carts be employed for the purpose and that a tax according to the rules passed be imposed.

H. H. SPARKES,
President.

Cash Account Current during the month of March 1906.

Budget head	Receipts	For Mar. 1906	For Mar. 1905
		Rs. a. p.	Rs. a. p.
I	Octroi—		
	Class I—(a) Cocoanuts, fresh	430 4 3	620 11 0
	(b) Do dry ...	8 14 0	51 6 6
	(c) Betel-leaves ...	385 2 3	403 11 4
	(d) Sugar ...	296 7 9	396 0 0
	(e) Jaggory ..	330 3 6	458 7 6
	(f) Ghee ..	483 6 0	908 15 9
	(g) Butter ...	38 12 10	52 13 9
	Class II—Sheep, goats and bullocks ...	308 2 0	381 14 0
	Class III—Oil and oil-seeds .	245 0 6	182 10 9
	Class III—(a) Kerosine oil ...	544 6 0	521 14 0
	Class IV—Timber and chunam	461 4 11	494 4 6
	Class VI—Tobacco ...	24 8 8	201 10 11
	Class VII—Cloths ...	2,429 14 5	2,183 1 0
	Total ...	5,986 7 1	6,857 9 0
II	Tax on houses and lands ...	976 10 0	2,980 1 10
III	License Receipts—		
	(a) Liquor Shops—		
	1. Regn. fee from Europe liquor shops ...	.....	...
	2. Do retail arrack shops ...	.....	.....
	3. Refreshment rooms ...	.....	.....
	4. Excess sale of arrack over 55 gallons ...	330 0 0	328 0 0
	Total (a) ...	330 0 0	328 0 0
	(b) Other Licenses—		
	1. Slaughter-house fees ...	60 8 0	34 0 0
	2. Cart-stand fees ...	12 9 3	22 1 0
	3. Fees from cattle fair ...	15 0 0	17 0 0
	4. Devaraj Market daily fees..	98 0 0	123 0 0
	5. Mandi do ...	25 8 0	29 0 0
	6. Tobacco license fees ...	5 0 0	.....
	7. Brick-kilns, etc. ..	.....	.....
	Total (b) ...	216 9 3	225 12 0
IV	Carriage tax ...	48 0 0	84 0 0
V	Tax on animals	129 8 0	98 2 0
VI	Tolls and ferries ...	2,025 8 0	1,856 2 0
VII	Other taxes—Mohatarfa—		
	a. Shop tax ...	131 10 0	679 0 8
	b. Loom tax ..	...	...
	c. Oil-mill tax ...	34 12 0	66 4 0
	d. Cart tax	16 8 0	47 8 0
	e. Water tax ..	...	...
	Total ...	182 14 0	792 12 8
VIII	Rents—		
	a. Houses	124 6 0	161 11 0
	b. Lands	12 6 0	51 12 0
	c. Devaraj Market Shops	637 6 7	389 0 0
	d. Mandi do	86 2 0	102 3 0
	e. Beef-butchers' stalls ..	3 8 0	3 4 0
	Total ...	863 12 7	707 14 0

Budget head	Expenditure	For Mar. 1906	For Mar. 1905	Remarks
		Rs. a. p.	Rs. a. p.	
II	Head Office—			
	1. Vice-President's allowance ...	500 0 0	500 0 0	
	2. Establishment ...	234 0 0	234 0 0	
	3. Contingent	9 8 6	10 0 6	
	4. Printing charges ...	.....	.....	
	5. Advertisement charges ...	.....	.....	
	6. Furniture	.....	.....	
	7. Clothing	.....	.....	
	8. Audit charges	.....	.....	
	Total ...	743 8 6	744 0 6	
III	Collection—			
	1. Octroi establishment ..	630 5 8	606 6 0	
	2. Do contingent ...	11 0 0	13 0 0	
	3. Printing charges ...	.....	.....	
	4. Rewards to detective smugglers	.....	.....	
	5. Mohatarfa establishment ...	244 0 0	194 0 0	
	6. Do contingent and printing	3 14 0	6 8 0	
	7. Market establishment ...	39 0 0	39 0 0	
	Total ...	928 3 8	858 14 0	
IV	Conservancy—			
	1. Establishment	2,024 3 11	1,989 8 3	
	2. Carts	547 0 10	537 13 6	
	3. Clothing ..	...	...	
	4. Tools and baskets	29 3 6	2 8 0	
	5. Painting street boards and door numbers. ...	.....	.....	
	6. Contingent ...	1 4 0	.....	
	7. Wheel-barrows	.....	.....	
	Total ...	2,601 12 3	2,529 13 9	
VI	Registration of Births and Deaths			
	1. Plague establishment ...	533 1 8	632 6 2	
	2. Rewards for information ...	.....	.....	
	Total ...	533 1 8	632 6 2	
VII	Lighting—			
	Establishment charges ...	149 11 2	151 6 0	
	1. Lighting lamps by contract, oil ...	438 4 0	514 8 0	
	2. Purchase of new lamp-posts, etc.	.....	0 13 0	
	3. Repairs of lanterns ...	...	.....	
	4. Purchase of lanterns .	...	.....	
	5. New lanterns and burners replaced	33 11 8	34 1 4	
	6. Purchase of matches, etc. ..	.....	...	
	Total ...	621 10 10	700 12 4	
VIII	Public Works—			
	1. Supervision	276 0 0	271 0 0	
	2. Roads, original	.....	...	
	3. Do repairs	4,140 3 6	348 8 2	
	4. Drains, original	.....	17 5 0	
	5. Do repairs	.....	.....	
	6. Water-supply, original ...	.....	.....	
	7. Do repairs ...	95 9 0	72 5 3	
	8. Buildings, original	.....	.....	
	9. Do repairs ...	...	41 10 0	
	10. Road watering ...	.....	.....	
	11. Other works, original ...	.....	124 9 3	
	12. Do repairs ..		...	
	13. Compensation	604 6 8	...	
	14. Reserve	.....	...	
	15. Tools and plant	...	.....	
	16. Transfer to other Departments ...	..	.....	
	Total ..	5,116 3 2	875 5 8	

598

Cash Account Current during the month of March 1906—*concld.*

Budget head	Receipts	For Mar. 1906	For Mar. 1905
		Rs. a. p.	Rs. a. p.
IX	Fines	...	6 0 0
X	Miscellaneous—		
	1. Sale of houses and lands ..	63 5 4	... ..
	2. Fines for cattle trespass ...	69 8 0	79 9 0
	3. Sale of stray cattle ...	.....	.....
	4. Fees for fodder charges ...	16 12 9	21 1 10
	5. Sale of manure ...	13 8 6	3 6 0
	6. Sale of grass ...	.....	.....
	7. Sale of smuggled goods ...	...	...
	8. Amarayi ..	.....	.....
	9. Notice and warrant fees ...	12 8 0	13 14 0
	10. Contribution from D. P. W.	.. ...	...
	11. Sale of trees	...	1 2 0
	12. Sale of store articles ..	17 13 0	1 8 0
	13. Sale of empty tin boxes, etc.	43 12 0	25 2 0
	14. Water tax	342 12 0	517 4 0
	15. Cost of Patta (O. I.) ...	0 0 6	.....
	16. Refunds	1 15 0	.....
	Total .	581 15 1	662 14 10
X	Payments for Municipal services rendered to individuals ...	2 4 10	43 4 6
VIII	Recoveries on account of Payment of previous years	...	125 0 0
	Total Receipts ...	11,363 8 10	14,767 8 10
	Stock Account .	0 8 0	354 13 6
	Public Works carried out ...	44 0 0	.....
	Advance Adjustment ...	.....	.....
	Deposits Received ...	114 10 3	1,049 6 2
	Total Receipts ...	11,522 11 1	16,171 12 6
	Opening Balance.		
	Actuals Rs. / Deposits ,, / Imprests ,,	.....	...
	Cheques drawn during the month	...	.....
	Actuals ... Rs.	.....	... ..
	Advances ,,	... ..	.....
	Deposits .. ,,	.....	...
	Book adjustment as per Comptroller's intimation.	.....	...
	Grand Total .	.....	.....

Budget head	Expenditure	For Mar. 1906	For Mar. 1905
		Rs. a. p.	Rs. a. p.
IX	Charitable Grants—		
	1. Dispensary in Old Agrahar ..	.....	.....
	2. Do in Erangere ...	.....	.....
	3. Do in Nazarbad ...	... ..	.....
	4. Indigenous Hospital ...	.....	.....
	5. Nikhilarogahari Hospital ...	.....	.....
	6. Maternity	30 0 0	30
	7. Vaccination	27 0 0	27
	8. Lanoline paste	.....	.....
	Total ...	57 0 0	57 0 0
X	Education	949 0 0	774 0 0
XI	Miscellaneous—		
	a. Repayment of loan ...	...	.....
	b. Refunds ..	203 11 5	.....
	c. Pound establishment ...	62 0 0	62 0 0
	d. Fodder charges	15 14 6	21 6 0
	e. Rewards to dog and snake-killers	2 13 0	40 6 0
	f. Pension charges ...	.....	.....
	g. Fairs and festivals ...	18 14 0	.....
	h. Town Hall establishment ..	26 0 0	26 0 0
	i. Do other charges ...	0 5 6	.....
	j. Law expenses	60 1 6	0 8 0
	k. Clock Tower gardener's pay.	...	... ...
	l. Tank watcher's pay ...	15 0 0	15 0 0
	m. People's Park establishment	62 0 0	62 0 0
	n. Do other charges .	.....	12 11 6
	o. Water maintenance establishment ...	196 3 5	199 8 0
	p. Do other charges.	634 11 7	1 3 9
	q. Watch-maker's allowance .	15 0 0	15 0 0
	r. Ten per cent commission to pound-keeper	.....	... ...
	s. Vanivilas Water Works establishment ..	320 13 11	305 14 7
	t. Do other charges.	90 11 1	464 0 1
	u. Care-taker's Estt. charges ...	5 0 0	10 0 0
	Total ..	1,729 3 11	1,255 9 11
	Total Expenditure ...	13,279 12 0	8,427 14 4
	Stock Account ..	1,338 2 6	2 9 0
	Transfers to other Depts. ...	85 8 0	... ..
	Advance Paid ..	14 0 0	.. ...
	Deposits Paid	194 0 0	1,358 11 2
	Total Expenditure ..	14,911 6 6	9,789 2 6
	Closing Balance.		
	Actuals ... Rs. / Deposits ... ,, / Imprests ... ,,	... ..	.....
	Amount remitted to Treasury.	.....	... ..
	Actuals ... Rs.	... ..	...
	Advances ,,	.....	.....
	Deposits ... ,,	.....	.....
	Book Adjustment as per Comptroller's intimation	... ..	.. ...
	Grand Total ..	.....	.....

Cash Account Current during the month of November 1905.

Budget head	Receipts	For November 1905	As per audited accounts of Comptroller
		Rs. a. p.	Rs. a. p.
1	Octroi—		
	Class I—(a) Cocoanuts, fresh...	507 8 7	
	(b) Do dry ...	18 8 11	
	(c) Betel-leaves ...	368 7 11	
	(d) Sugar ...	555 6 9	
	(e) Jaggory	284 3 11	
	(f) Ghee ...	420 14 6	
	(g) Butter ...	61 2 9	
	Class II—Sheep, goats and bullocks.	452 14 0	
	Class III—Oil and oil-seeds ...	212 13 0	
	Class III (a)—Kerosene oil ..	472 2 0	
	Class IV—Timber and chunam.	755 1 11	
	Class VI—Tobacco ...	163 9 5	
	Class VII—Cloths ..	908 10 11	
	Total ...	5,281 8 7	
II	Tax on houses and lands .	1,454 10 0	
III	License Receipts—		
	(a) Liquor shops—		
	1. Regn. fee from Europe liquor shops.	12 0 0	
	2. Do retail arrack shops ...	360 0 0	
	3. Refreshment rooms ...	.....	
	4. Excess sale of arrack over 55 gallons.	305 4 0	
	Total (a) ...	677 4 0	
	(b) Other Licenses—		
	1. Slaughter-house fees ...	60 8 0	
	2. Cart-stand fees ...	13 12 9	
	3. Fees from cattle fair ...	18 12 0	
	4. Devaraj Market daily fees.	110 0 0	
	5. Mandi do ...	25 8 0	
	6. Tobacco license fee ...	13 0 0	
	7. Brick-kilns, etc. ...	.....	
	Total ...	241 8 9	
IV	Carriage tax	59 0 0	
V	Tax on animals	63 12 0	
VI	Tolls and ferries	1,928 8 0	
VII	Other taxes—Mohatarfa—		
	a. Shop tax	330 6 0	
	b. Loom tax	....	
	c. Oil-mill tax	59 0 0	
	d. Cart tax	35 4 0	
	e. Water tax	.....	
	Total ...	424 10 0	

Budget head	Expenditure	For November 1905	As per audited accounts of Comptroller
		Rs. a. p.	
II	Head Office—		
	1. Vice-President's allowance ...	500 0 0	
	2. Establishment	229 0 0	
	3. Contingent	3 13 0	
	4. Printing charges	.....	
	5. Advertisement charges ...	.....	
	6. Furniture ...	.....	
	7. Clothing	....	
	8. Audit charges	.....	
	Total ...	732 13 0	
III	Collection—		
	1. Octroi establishment ...	616 14 11	
	2. Do contingent	18 0 0	
	3. Printing charges	.....	
	4. Rewards to detective smugglers...	.....	
	5. Mohatarfa establishment ...	244 0 0	
	6. Do contingent and printing	0 4 0	
	7. Market establishments (rents) ...	39 0 0	
	Total ..	918 2 11	
IV	Conservancy—		
	1. Establishment	2,022 3 9	
	2. Carts	538 15 0	
	3. Clothing		
	4. Tools and baskets	28 8 3	
	5. Painting street boards and door numbers.	41 9 6	
	6. Contingent	.....	
	7. Repairing night-soil carts ...	10 1 6	
	Total ...	2,641 6 0	
VI	Registration of Births and Deaths—		
	1. Plague establishment ...	544 5 3	
	2. Rewards for information ...	.....	
	Total ...	544 5 3	
VII	Lighting—		
	1. Lighting lamps by contract oil, etc.	628 11 0	
	Do establishment charges ...	150 11 0	
	2. Purchase of new lamp-posts, etc..	.....	
	3. New lanterns and burners replaced	.....	
	Total ...	7 6 0	
VIII	Public Works—		
	1. Supervision	276 0 0	
	2. Road, original	207 1 10	
	3. Do repairs	2,984 8 10	
	4. Drains, original	.....	
	5. Do repairs	18 12 0	
	6. Water-supply, original ...	.....	
	7. Do repairs ...	.....	
	8. Buildings, original	27 11 0	
	9. Do repairs ..	164 12 7	
	10. Road watering	.....	
	11. Other works, original ...	.....	
	12. Do repairs ..	36 15 6	
	13. Compensation	.....	
	14. Reserve	.....	
	15. Tools and plants ...	8 10 0	
	16. Works carried out by P. W. D...	.....	—3 9 3
	Total ...	3,720 14 6	.....

(a) Credit afforded in the Public Works exchange accounts on account of the cost of pipes, etc., in the Curzon Park supplied by the Municipality

Cash Account Current during the month of November 1905—*concld.*

Budget head	Receipts	For November 1905.	As per audited accounts of Comptroller
		Rs. a. p.	Rs. a. p.
VIII	Rents—		
	a. Houses	344 0 6	
	b. Lands	50 10 0	
	c. Devaraj Market Shops ...	334 12 11	
	d. Mandi do ...	90 8 0	
	e. Beef-Butchers' Stalls ...	.....	
	Total ...	819 15 5	
IX	Fines—	.....	
X	Miscellaneous—		
	1. Sale of houses and lands ...	... ..	
	2. Fines for cattle trespass ...	103 3 0	
	3. Sale of stray cattle ...	.....	
	4. Fees for fodder charges ...	18 8 7	
	5. Sale of manure ...	3 12 0	
	6. Sale of grass ...	.....	
	7. Sale of smuggled goods ...	.....	
	8. Amarayi ...	.....	
	9. Notice and warrant fees ...	20 12 0	
	10. Contribution from D. P. W.	.....	(b) 12,000 0 0
	11. Sale of trees ...	3 10 0	
	12. Sale of store articles ...	*56 0 0	*Other items.
	13. Sale of empty tin boxes, &c.	10 6 0	
	14. Water tax ...	266 0 0	
	15. Refunds and recoveries ...	0 8 0	
	Total ...	.....	12,482 11 7
XI	Payments for Municipal services rendered to individuals.	2 15 7	
	Total M. R. Receipts ...	23,436 7 11	
	Stock Account ...	21 15 6	
	P. W. carried out ...	(a) 302 3 6	
	Advance Adjustment ...	75 0 0	
	Transfers to other Depts. ...	.....	
	Deposits received ...	171 12 7	
	Total P. D. Receipts ...	484 7 7	
	Total Receipts ...	1,055 7 2	
	M. R. Balance ...	24,491 15 1	
	P. D. Balance ...	48,907 9 7	
	Total Opening Balance ...	450 10 10	
		48,456 14 9	
	Grand Total ...	72,948 13 10	

Budget head	Expenditure	For November 1905	As per audited accounts of Comptroller
		Rs. a. d	Rs. a. p.
IX	Charitable Grants—		
	1. Dispensary in Old Agrahar.	.....	
	2. Do Erangere	.....	
	3. Do Nazarbad ...	.....	
	4. Indigenous Hospital ..	.....	
	5. Nikhilarogahari Hospital ..	.....	
	6. Maternity ...	30 0 0	
	7. Vaccination ...	27 0 0	
	8. Lanoline paste ...	.....	
	Total ...	57 0 0	
X	Education	734 0 0	
X	Miscellaneous—		
	a. Repayment of loan ...	.....	
	b. Refund ...	...	
	c. Pound establishment ...	62 0 0	
	d. Fodder charges ...	5 8 3	
	e. Rewards to dog and snake-killers.	60 1 0	
	f. Pension charges ...	...	
	g. Fairs and festivals ...	299 1 6	
	h. Town Hall Establishment.	26 0 0	
	i. Do other charges.	.....	
	j. Law Expenses ...	..	
	k. Clock Tower gardener's pay	.....	
	l. Tank watcher's pay (Nirgantis).	15 0 0	
	m. Peoples' Park Establishment (gardens).	62 0 0	
	n. Do other charges...	2 8 6	
	o. Water maintenance Establishment.	189 14 4	
	p. Do other charges	4 4 8	
	q. Watch-maker's allowance.	15 0 0	
	r. Ten per cent commission to pound-keeper.	...	
	Vani Vilas water works establishment.	317 0 0	
	Do other charges ..	205 3 0	
	Care-taker s establishment ...	5 0 0	
	Total ...	1,268 9 3	
	Expenditure of previous years adjusted in the current year.		(c) 1,656 0 0
	Total M. R. Expenditure ...	13,052 8 11	
	Transfers to othor Depts. ...	87 0 0	
	Advance Paid ...	.....	
	Deposits Paid ...	397 0 2	
	Total P. D. Expenditure ...	484 0 2	
	Total Expenditure ...	13,536 8 1	
	M. R. Balance ...	59,291 8 7	
	P. D. Balance ...	120 12 2	
	Total Closing Balance ...	59,412 4 9	
	Grand Total ...	72,948 13 10	

(b) *Vide* No. 429—L. F., dated 15th November 1905.

(c) G. O. No. 5149-52—San. (194-04)-6, dated 18th November 1905.

Cash Account Current during the month of December 1905.

Budget head	Receipts	For December 1905	As per audited accounts of Comptroller
		Rs. a. p.	Rs. a. p.
I	Octroi—		
	Class I—(a) Cocoanuts, fresh ...	446 5 0	
	(b) Do dry ...	70 7 3	
	(c) Betel-leaves ...	345 15 1	
	(d) Sugar ...	313 11 2	
	(e) Jaggory ...	232 5 7	
	(f) Ghee ...	559 1 5	
	(g) Butter ...	73 14 0	
	Class II—Sheep, goats and bullocks.	426 4 0	
	Class III—Oil and oil-seeds ..	310 1 0	
	Class III—(a) Kerosene oil ...	425 4 0	
	Class IV—Timber and chunam.	551 11 4	
	Class VI—Tobacco ..	166 8 6	
	Class VII—Cloths ..	1,052 10 2	
	Total ...	4,984 2 6	
II	Tax on houses and lands ...	1,414 10 7	
III	License Receipts—		
	(a) Liquor shops—		
	1. Regn. fee from Europe liquor shops.	.....	
	2. Do retail arrack shops ...	.....	
	3. Refreshment rooms ...	.....	
	4. Excess sale of arrack over 55 gallons.	344 12 0	
	Total (a) ...	344 12 0	
	(b) Other Licenses—		
	1. Slaughter-house fees ...	60 8 0	
	2. Cart-stand fees ...	12 4 0	
	3. Fees from cattle fair ..	15 0 0	
	4. Devaraj Market daily fees ..	98 0 0	
	5. Mandi do ...	.....	
	6. Fees from tobacco dealers .	21 0 0	
	7. Brick-kilns, etc. ...	.....	
	Total (b) ...	204 12 0	
IV	Carriage tax	44 0 0	
V	Tax on animals	50 12 0	
VI	Tolls and ferries	1,900 8 0	
VII	Other taxes—Mohatarfa—		
	(a) Shop tax	397 9 0	
	(b) Loom tax	... ..	
	(c) Oil-mill tax	57 0 0	
	(d) Cart tax	26 12 0	
	(e) Water tax	...	
	Total .	481 5 0	

Budget head	Expenditure	For December 1905	As per audited accounts of Comptroller
		Rs. a. p.	
II	Head Office—		
	1. Vice-President's allowance ...	500 0 0	
	2. Establishment	229 0 0	
	3. Contingent	13 15 6	
	4. Printing charges	...	
	5. Advertisement charges ..	...	
	6. Furniture	..	
	7. Clothing	55 11 3	
	8. Audit charges	...	
	Total ...	798 10 9	
III	Collection—		
	1. Octroi establishment ...	620 5 1	
	2. Do contingent	11 0 0	
	3. Printing charges	.....	
	4. Rewards to detective smugglers ...	.....	
	5. Mohatarfa establishment ...	272 0 0	
	6. Do contingent and printing.	2 4 0	
	7. Market establishment (rents) ...	37 0 0	
	Total ...	942 9 1	
IV	Conservancy—		
	1. Establishment	2,024 4 4	
	2. Carts	539 2 8	
	3. Clothing	.....	
	4. Tools and baskets	14 7 10	
		+9 2 0	
	5. Painting street boards and door numbers.	.....	
	6. Contingent	.....	
	7. Wheelbarrows	...	
	Total ...	2,575 0 10	
V	Contribution—		(a)72 1 6
XI	Registration of Births and Deaths—		
	1. Plague establishment ...	554 2 5	
	2. Rewards for information ...	.....	
VII	Lighting—		
	1. Repairs of lanterns ...	.....	
	2. Lighting lamps by contract, oil, etc.	530 1 0	
	3. Do establishment charges ..	150 6 0	
	4. Purchase of new lamp-posts, chimny	0 2 0	
	5. Do matches ...	.....	
	6. New lanterns and burners replaced	76 10 8	
	Total ..	757 3 8	
VIII	Public Works—		
	1. Supervision	276 0 0	
	2. Road, original	.	
	3. Do repairs	7,025 11 4	
	4. Drains, original	.....	
	5. Do repairs	.....	
	6. Water-supply original ...	...	
	7. Do repairs	6 0 0	
	8. Buildings, original	.....	
	9. Do repairs	49 10 9	
	10. Road watering	.....	
	11. Other works, original ...	16 4 0	
	12. Do repairs	.....	
	13. Compensation	.....	
	14. Reserve	.....	
	15. Tools and plant	65 6 4	
	16. Works carried out by P. W. D. ...	108 0 9	...
	Total ...	7,547 1 2	...

(a) *Vide* Comptroller's No. 643—L. F., dated 8th February 1906.

Cash Account Current during the month of December 1905.—*concld.*

Budget head	Receipts	For December 1905	As per audited accounts of Comptroller
		Rs. a. p.	Rs. a. p.
VIII	Rents—		
	a. Houses	115 10 6	
	b. Lands	10 14 0	
	c. Devaraj Market Shops ...	385 13 6	
	d. Mandi do ...	10 13 0	
	e. Beef-Butchers' Stall ..	3 8 0	
	Total ...	526 11 0	
IX	Fines	... ..	
X	Miscellaneous—		
	1. Sale of houses and lands ..	0 14 0	
	2. Fines for cattle trespass ...	47 13 0	
	3. Sale of stray cattle ...	... ..	
	4. Fees for fodder charges ...	9 13 3	
	5. Sale of manure ...	104 7 2	
	6. Sale of grass ...	.....	
	7. Sale of smuggled goods ...	.....	
	8. Amarayi	.....	
	9. Notice and warrant fees ...	25 10 0	
	10. Contribution from D.P.W.	.....	
	11. Sale of trees	.....	
	12. Sale of store articles ...	35 9 8	
	13. Sale of empty tin boxes, etc.	29 12 0	
	14. Water tax	241 0 0	
	Total ...	494 15 1	
XI	Payments for Munl. services rendered to individuals.	0 12 2+ 6 9 3	
	Total Munl. Receipts ...	10,455 13 7	
	Stock Account ...	0 1 3+ 55 7 7	
	P. W. carried out ...	14 8 0	
	Advance Adjustment ...	...	
	Transfer to other Depts. ...	.....	(a) 216 4 6
	Deposits received ...	210 91)	
	Total P. D. Receipts ...	.....	498 15 2
	Grand Total ...	10,738 8 3	
	Total Receipts ...	10,954 12 9	
	M. R. Balance ...	59,291 8 7	
	P. D. Balance ...	120 12 2	
	Opening Balance ...	59,412 4 9	
	Grand Total ...	70,367 1 6	

Budget head	Expenditure	For December 1905	As per audited accounts of Comptroller
		Rs. a. p.	
IX	Charitable Grants—		
	1. Dispensary in Old Agrahar ...	.....	
	2. Do Erangere ...	.....	
	3. Do Nazarbad ...	.....	
	4. Indigenous Hospital ...	.....	
	5. Nikhilarogahari Hospital ...	.....	
	6. Maternity	30 0 0	
	7. Vaccination	27 0 0	
	8. Lanoline paste	.. ...	
	Total ...	57 0 0	
X	Education	734 0 0	
XI	Miscellaneous—		
	a. Repayment of loan	.....	
	b. Refunds ...	61 9 7	
	c. Pound establishment... ...	62 0 0	
	d. Fodder charges	18 10 10	
	e. Rewards to dog and snake-killers	2 1 0	
	f. Pension charges	.....	72 9 0
	g. Fairs and festivals	16 4 0	
	h. Town Hall establishment ...	24 0 0	
	i. Do other charges ...	0 1 0	
	j. Law expenses	.....	
	k. Clock Tower gardener's pay ...	.....	
	l. Tank watcher's pay (Nirgantis) ...	15 0 0	
	m. Peoples' Park estt.) Gar-	62 0 0	
	n. Do other charges) deners	5 8 0	
	o. Water maintenance establishment	196 4 4	
	p. Do other charges.	3 11 10	
	q. Watch-maker's allowance ...	15 0 0	
	r. Ten per cent commission to pound-keeper.	.....	
	Vanivilas water Works establishment.	317 0 0	
	Do other charges ..	102 12 0	
	Care-taker's establishment do...	5 0 0	
	Total ...	979 7 7	
	Total Munl. Expenditure ...	14,767 9 9	
	Stock Account ...	.....	
	Advance Paid ...	164 0 0	
	Transfer to other Depts. ...	86 12 3	
	Deposits paid ..	76 15 1+ 61 14 10	
	Total Expenditure ...	389 10 2	
	Grand Total ...	15,157 3 11	
	Total Expenditure ..	15,409 15 2	
	M. R. Balance ...	54,727 1 2	
	P. D. Balance ...	230 1 2	
	Closing Balance ...	54,957 2 4	
	Grand Total ...	70,367 1 6	

(*a*) *Vide* Comptroller's No. 643—L. F., dated 8th February 1906.

MORTUARY REGISTER.

FOR THE WEEK ENDING 20TH APRIL 1906.

Bangalore City.

Estimated population according to the Census of 1901. { Males ... 35,964; Females ... 33,483 } Total ... 69,447

Diseases	M.	F.	Total
Plague	3	2	5
Cholera ...	...	...	
Small-pox	2	1	3
Fevers	5	4	9
Bowel-complaints ...	4	2	6
Suicide ...	...	...	...
Wounding	..	...	...
Accident	...	4	4
Snake-bite or killed by wild beasts	...	..	...
All other causes ...	29	26	55
Total ...	43	39	82
Births during the week ...	17	21	38

Mysore City.

Estimated population according to the Census of 1901. { Males ... 34,328; Females ... 33,783 } Total ... 68,111

Diseases	M.	F.	Total
Plague	...	...	...
Cholera	...	...	...
Small-pox ...	..		...
Fevers ...	0	3	3
Bowel-complaints ...	1	...	1
Suicide	...	...	...
Wounding ...	...	...	...
Accident	...	..	...
Snake-bite or killed by wild beasts	...	...	...
All other causes ...	11	8	19
Total ...	12	11	23
Births during the week ...	13	10	23

FOR THE WEEK ENDING 27TH APRIL 1906.

Diseases	M.	F.	Total
Plague	...	2	2
Cholera	...	...	...
Small-pox	1	...	1
Fevers	1	3	4
Bowel-complaints ...	2	4	6
Suicide	...	...	...
Wounding	...	...	...
Accident	...	...	...
Snake-bite or killed by wild beasts	...	...	...
All other causes ...	27	26	53
Tota ..	31	35	66
Births during the week ...	13	11	24

Diseases	M.	F.	Total
Plague	...	...	...
Cholera	.	...	...
Small-pox	...	2	2
Fevers	1	..	1
Bowel-complaints ...	1	1	2
Suicide	...	...	...
Wounding	...	1	1
Accident	1	...	1
Snake-bite or killed by wild beasts	...	...	...
All other causes ..	9	19	28
Total ...	12	23	35
Births during the week ..	12	20	32

By Order,

P. PALPU, L.M.S., D.P.H.,

for Offg. Sr. Surgn. & Sany. Comr., M. G.

ARCHÆOLOGICAL DEPARTMENT.

Now Ready,

EPIGRAPHIA CARNATICA, VOL. IX,

being

Inscriptions in the Bangalore District,

BY B. LEWIS RICE, C.I.E., M.R.A.S.,

Containing 1069 inscriptions, with Roman Text, Translations, Introduction, and Illustrations. Full cloth, demy 4to. Price Rs. 12-8-0.

Apply to the Curator, Government Book Depot, Fort, Bangalore.

BANGALORE CENTRAL JAIL.

Notification dated 28th May 1906.

1. Notice is hereby given that sealed tenders will be received up to 10 A.M. on Saturday the 16th June 1906, by the Superintendent of the Bangalore Central Jail, for the supply of the following article required for the use of the said Jail for the period of one year from 1st July 1906 to 30th June 1907, both days inclusive.

2. No tenders will be received after the date above mentioned.

3. Tender to be superscribed as follows:—Tender for the supply of "Mutton."

4. No tender will be received unless accompanied by a deposit of Rs. 75.

5. Tenders will be opened by the Superintendent of the Bangalore Central Jail at his office on the date above mentioned, in the presence of such tenderers as may choose to attend.

6. All tenders must specify the rate at which mutton can be supplied in pound weight per rupee, and mutton supplied to be of good quality and subject to the approval of the Superintendent:—

	Probable annual consumption.
Mutton without bone	20,000 lbs.

The quantity above stated is not guaranteed.

7. The Superintendent reserves to himself the right of rejecting any tender without assigning any reason for so doing.

8. The deposit of the successful tenderer will be retained, and will be forfeited if he fails to execute the contract bond, or to furnish security to the amount of Rs. 150 in cash or Government bonds, within one week from the date of his acceptance of the contract being made known to him.

9. No advance of cash will be made to the contractor. Payments will be made by the Superintendent, Central Jail, Bangalore, as soon as possible after the 1st of each month.

10. Mutton must be at the Jail by 7 A.M. daily.

11. The contract must not be sub-let.

12. A fine not exceeding Rs. 50 will levied at the discretion of the Superintendent of the Bangalore Central Jail, for any infringement of the stipulation of the contract, or for the supply of any inferior meat, and if frequently violated, the contract may be annulled and the security confiscated to the Government.

13. The decision of the Superintendent of the Bangalore Central Jail will be final in all questions of infringement of contract.

14. Any further information can be obtained by applying at the Superintendent's office.

15. The contract will be subject to the confirmation of the Inspector-General of Prisons in Mysore.

16. In the event of the contractor being unwilling to carry out his agreement, he shall give at least one month's notice and shall forfeit the security money to Government. The contractor will also be bound to make good to Government any loss which may arise from his failure, or by Government having to purchase the article specified in the contract in the local markets at a higher rate than that contracted for.

17. The contractor is required to present his bill for payment precisely on or before the date prescribed by the Superintendent, failing which, the Superintendent shall refuse payment of the bill submitted after the said date.

N. B.—No concession of any kind will be allowed on the above contract.

G. HUME WRIGHT, *Supt.*

MYSORE JAIL.

The undersigned invites the attention of the public to the detailed notification dated 1st May 1906, published on page 790 in the *Mysore Gazette*, dated 17th May 1906, for the supply of ration articles, etc., to the Mysore Jail during the year 1906-07.

T. S. NANJAPPA,
Ag. Superintendent.

GOVERNMENT CENTRAL BOOK DEPOT, BANGALORE.

Notification dated 23rd May 1906.

The undermentioned books are available for sale at the Central Book Depot, Bangalore:—

	Rs.	a.	p.
Kannada Balabodhe, Part I	0	1	0
Do Brief History of Mysore	0	2	6
Savitre Charitre	0	2	0

S. ABDUL HAI,
Curator.

MYSORE GOVERNMENT CENTRAL PRESS.

Dated 8th May 1906.

Notice is hereby given that old and unserviceable articles of the Government Central Press, as specified in the annexed list, will be sold by public auction on Friday the 15th June 1906, at 2 P.M., on the Press premises. The highest bidder at the auction shall pay the purchase money before the articles are removed :—

No.	Description	Quantity	Remarks
1	Ink roller stocks of sizes	10	
2	Broken writing tables, chairs, benches, etc.	1 lot	
3	Binder's table and roller racks	1 ,,	
4	Type cases	60	
5	Wooden galleys and type plates	70	
6	Compositors' stools	10	
7	Zinc galleys	19	
8	Litho polishing stone	1	
9	Do stone	1	
10	Palette knife	1	
11	Glue pot	1	
12	Wooden tubs, small	3	
13	Binders' knives	2	
14	Type-holders (binders')	2	
15	Glazed tissue boards, pieces	480	
16	Lubricators (tin)	6	
17	Wooden pumps	2	
18	Litho scraper	1	
19	"Honors" enumerators	3	
20	Paste kettles	2	
21	Aluminium kettle	1	
22	Iron pan	1	
23	Binders' laying presses	2	
24	Bench vice (large)	1	
25	Composing sticks	20	
26	Litho rollers	4	
27	Empty kerosene oil tins	180	
28	,, ink tins	50	
29	,, roller composition tins	40	
30	Bellows	2	
31	Cotton belting	70 feet	
32	Oil cans	4	
33	Caster's rubbing stone	1	
34	Hanging lamps	9	
35	Iron drums	2	
36	Brass rules, locks, etc.	1 lot	
37	Iron bars, springs, cams, locks, etc.	1 ,,	
38	Dealwood type cases	1 ,,	
39	Printing ink (of colors)	1 ,,	
40	Map varnish	2 tins	
41	Litho transfer paper	1 roll	
42	,, retransfer ink	5 cakes	
43	,, crayons	20 packets	
44	Leather pieces	1 lot	
45	Machine and press blankets, cloths, etc.	1 ,,	
46	Files	4	
47	Wooden casks	3	
48	Gelatine	25 lbs.	
49	Brushes, mallets, planers, etc.	1 lot	
50	Zinc tub	1	
51	Vaseloid	1 tin	
52	Guttapercha for machines	1 roll	
53	Type-casters' scrapers	3	
54	Punches (Sanskrit, Kanarese and Telugu)	1 lot	
55	Chases of sizes (broken)	1 ,,	

Notice dated 29th May 1906.

Notice is hereby given that the right of collecting the manure and removing the same from the latrines of the Government Press will be sold by public auction on 20th June 1906 to the highest bidder for a period of three years commencing from 1st July 1906 to 30th June 1909.

C. H. YATES, *Supt., Govt. Press.*

MYSORE GOVERNMENT METEOROLOGICAL DEPARTMENT.

Daily Means of Observations for the Week Sunday 13th to Saturday 19th May 1906.

No.	BANGALORE	Sunday 13	Monday 14	Tuesday 15	Wednesday 16	Thursday 17	Friday 18	Saturday 19
1	Barometer red. to 32° F.	26·882	26·871	26·844	26·865	26·854	26·877	26·823
2	Daily Barometric range	·133	·134	·138	·134	·132	·141	·121
3	Mean Dry Temperature in shade	82·1	79·6	80·3	82·2	84·6	80·8	83·5
4	Maximum do	95·1	92·5	93·9	95·6	98·4	94·2	97·6
5	Minimum do	70·1	66·8	66·8	69·5	71·6	68·1	70·7
6	Daily range of do	25·0	25·7	27·1	26·1	26·8	26·1	26·9
7	Mean Wet Temperature in shade	69·1	69·0	70·2	68·3	67·3	67·2	65·1
8	Minimum do	61·7	63·7	63·8	66·2	64·2	65·2	64·8
9	Pressure of Aqueous Vapour	·584	·602	·625	·544	·502	·517	·413
10	Humidity	53	58	54	50	41	53	35
11	Wind Vely. in Miles p. day to 8 A. M	215	204	227	221	202	225	215
12	Mean Wind Direction	W S W	W	W b S	W	N W b W	W	N W b W
13	Rainfall in inches to 8 A.M.	0·19	0·21	0·48	0	0	0·19	0
14	Total Rainfall from 1st January	2·10	2·31	2·79	2·79	2·79	2·98	2·98
15	Per cent of Cloudy Sky	47	0	13	0	0	27	17
16	Character of Weather	Thunder storm	Thunder storm	Thunder storm	Distant lightning	Fine clear	Thunder storm	Fine

606

MYSORE GOVERNMENT METEOROLOGICAL DEPARTMENT.

Daily Means of Observations for the Week Sunday 13th to Saturday 19th May 1906.

No.	MYSORE	Sunday 13	Monday 14	Tuesday 15	Wednesday 16	Thursday 17	Friday 18	Saturday 19
1	Barometer red. to 32° F.	27·390	27·374	27·346	27·368	27·350	27·380	27·318
2	Daily Barometric range	·129	·129	·157	·146	·149	·149	·125
3	Mean Dry Temperature in shade	80·3	78·7	82·5	81·6	85·6	83·0	85·5
4	Maximum do	90·2	90·7	95·2	94·5	98·0	95·1	100·0
5	Minimum do	71·0	66·7	70·3	68·8	73·1	71·0	72·0
6	Daily range of do	19·2	24·0	24·9	25·7	24·9	24·1	28·0
7	Mean Wet Temperature in shade	72·7	71·0	70·4	70 9	71·3	68·4	68·2
8	Minimum do	68·5	65·3	66·9	66·0	70·0	66·5	66·5
9	Pressure of Aqueous Vapour	·739	·690	·617	·651	·589	·529	·514
10	Humidity	70	62	55	55	49	50	42
11	Wind Vely. in Miles p. day to 8 A.M.	270	318	286	257	277	333	253
12	Mean Wind Direction	S W b W	W S W	W b S	W b S	W	N b W	N W b W
13	Rainfall in inches to 8 A.M.	0·14	0·08	0	0·03	0	0	0
14	Total Rainfall from 1st January	3·98	4·06	4·06	4·09	4·09	4·09	4·09
15	Per cent of Cloudy Sky	90	37	67	13	3	67	3
16	Character of Weather	Distant thunder	Thunder storm	Fine	Fine	Fine clear	Fine	Fine clear

607

MYSORE GOVERNMENT METEOROLOGICAL DEPARTMENT.

Daily Means of Observations for the Week Sunday 13th to Saturday 19th May 1906.

No.	HASSAN	Sunday 13	Monday 14	Tuesday 15	Wednesday 16	Thursday 17	Friday 18	Saturday 19
1	Barometer red. to 32° F.	26·863	26·844	26·812	26·834	26·825	26·860	26·784
2	Daily Barometric range	·115	·111	·108	·112	·106	·125	·108
3	Mean Dry Temperature in shade	76·2	74·8	78·7	82·0	81·7	80·6	80·7
4	Maximum do	88·4	88·1	93·9	95·3	96·0	94·9	97·2
5	Minimum do	65·3	62·6	67·3	69·7	68·1	67·1	65·9
6	Daily range of do	23·1	25·5	26·6	25·6	27·9	27·8	31·3
7	Mean Wet Temperature in shade	70·6	69·5	71·2	71·1	69·3	68·0	64·4
8	Minimum do	64·8	62·3	65·3	68·3	64·7	62·9	62·1
9	Pressure of Aqueous Vapour	·676	·697	·703	·622	·597	·537	·426
10	Humidity	63	69	62	55	49	46	36
11	Wind Vely. in Miles p. day to 8 A.M.	70	95	100	103	90	109	76
12	Mean Wind Direction	W N W	W b S	W b N	W b S	N W b W	W N W	N E b N
13	Rainfall in inches to 8 A. M.	0·35	0·37	0	0	0	0	0
14	Total Rainfall from 1st January	1·72	2·09	2·09	2·09	2·09	2·09	2·09
15	Per cent of Cloudy Sky	57	53	43	30	3	30	3
16	Character of Weather	Distant thunder	Distant thunder	Distant thunder	Distant thunder	Foggy ; sultry	Fine ; sultry	Fine clear ; sultry

MYSORE GOVERNMENT METEOROLOGICAL DEPARTMENT.

Daily Means of Observations for the Week Sunday 13th to Saturday 19th May 1906.

No.	CHITALDRUG	Sunday 13	Monday 14	Tuesday 15	Wednesday 16	Thursday 17	Friday 18	Saturday 19
1	Barometer red. to 32° F.	27·464	27·449	27·431	27·451	27·444	27·477	27·416
2	Daily Barometric range	·146	·125	·135	·126	·143	·143	·125
3	Mean Dry Temperature in shade	80·9	80·9	84·7	83·7	88·1	84·2	85·5
4	Maximum do	93·9	94·0	97·1	96·4	99·9	96·4	99·2
5	Minimum do	68·0	72·2	72·5	71·4	76·8	72·7	72·1
6	Daily range of do	25·9	21·8	24·6	25·0	23·1	23·7	27·1
7	Mean Wet Temperature in shade	72·4	71·9	69·4	69·4	67·2	71·0	69·0
8	Minimum do	66·0	69·5	65·8	67·2	60·6	68·9	66·1
9	Pressure of Aqueous Vapour	·733	·693	·584	·554	·456	·603	[illegible]
10	Humidity	63	65	50	49	34	53	46
11	Wind Vely. in Miles p. day to 8 A. M.	202	252	235	242	213	222	217
12	Mean Wind Direction	W b N	W b S	W	W b S	W N W	W N W	N W b W
13	Rainfall in inches to 8 A. M.	0·33	0	0	0	0	0	0
14	Total Rainfall from 1st January	2·47	2·47	2·47	2·47	2·47	2·47	2·47
15	Per cent of Cloudy Sky	3	17	0	0	0	30	0
16	Character of Weather	Thunder storm	Thunder	Distant thunder	Fine clear	Fine clear	Fine	Fine clear

Dated 24th May 1906.

N. VENKATESA IYENGAR, for *Director of Meteorology.*

Abstract Statement of Plague Cases and Deaths in the Mysore Province for the week ending Friday the 18th May 1906.

Place	During the week ending 18th May 1906		During the week ending 11th May 1906		Figures for the corresponding week of last year		Number of infected villages
	Attacks	Deaths	Attacks	Deaths	Attacks	Deaths	
Bangalore City	1	1	...	...	5	3	...
Mysore City	...	...	...	...	...	...	...
Bangalore District	...	...	...	...	4	2	..
Mysore District	5	4	1	1	3	5	1
Kolar District (excluding Gold Fields)	...	...	...	...	1	...	...
Kolar Gold Fields	...	...	1	1	1	1	1
Tumkur District	...	...	...	...	...	...	...
Hassan District	1	2	4	2	...	...	2
Chitaldrug District	...	...	...	...	...	...	1
Kadur District	...	...	...	...	...	...	...
Shimoga District	...	...	...	...	...	...	...
Total ...	7	7	6	4	14	11	5

Abstract Statement of Plague Cases and Deaths in the Mysore Province for the week ending Friday the 25th May 1906.

Place	During the week ending 25th May 1906		During the week ending 18th May 1906		Figures for the corresponding week of last year		Number of infected villages
	Attacks	Deaths	Attacks	Deaths	Attacks	Deaths	
Bangalore City	...	...	1	1	1	...	...
Mysore City	...	...	...	...	...	...	...
Bangalore District	...	...	...	...	4	3	...
Mysore District	...	...	5	4	...	1	1
Kolar District (excluding Gold Fields.)	...	...	...	...	...	...	...
Kolar Gold Fields	...	...	...	...	...	...	...
Tumkur District	...	...	...	...	2	2	...
Hassan District	1	...	1	2	...	...	2
Chitaldrug District	...	...	...	...	...	...	...
Kadur District ...	...	...	...	...	...	...	...
Shimoga District	...	...	...	...	13	6	...
Total ...	1	...	7	7	20	12	3

T. S. NANJAPPA,
for *Offg. Sr. Surgn. & Sany. Comr., M. G.*

617

The Mysore Gazette.

VOL. 41.] PUBLISHED BY AUTHORITY. [No. 22.

BANGALORE, THURSDAY, MAY 31, 1906.

PART IV.

OFFICIAL PAPERS.

Season Report for the Week ending with the 21st Saturday in 1906 (26th May 1906).

District and Station.	Rainfall up to 8 A.M. on Saturday.					Price of food grains in seers per rupee and market fluctuations in prices of food grains.			
	This week.	Last ten years' average for the corresponding week.	Up to the end of the week from 1st January 1906.						
			This year.	Average of past ten years.	Excess (+) or defect (—) of column 4 compared with column 5.				
1	2	3	4	5	6	7			
	I. c	I. c.	I. c.	I. c.	I. c.		This week.	Past week.	Past ten years' fortnightly average.
							Seers	Seers	Seers.
BANGALORE.									
Bangalore C. & M. Station ...	... 2	... ...	... 2	... ...	.. ...				
„ City & Taluk...	... 17	1 21	2 99	5 85	— 2 86	Rice, 2nd sort.	6·50	6·50	9·15
Hoskote ...	... ...	1 4	1 22	5 52	— 4 30				
Dodballapur ...	... 70	.. 86	1 43	6 10	— 4 67	Ragi	16·00	16·00	21·81
Nelamangala ...	... ...	1 16	1 30	5 73	— 4 43	Kulthi	10·75	10·75	...
Kankanhalli ...	... ...	1 20	3 36	6 76	— 3 40	Kadale	8·00	8·00	10·75
Magadi ...	.. ..	... 94	.. 19	4 58	— 4 39				
Channapatna ...	... 25	1 32	3 92	6 76	— 2 84				
Anekal ...	... ...	1 11	3 59	6 48	— 2 89				
Devanhalli ...	... 4	... 73	1 4	5 88	— 4 84				
Closepet ...	... 36	1 89	4 61	6 76	— 2 5				
District average...	... 15	1 15	2 36	6 4	— 3 68				
KOLAR.									
Kolar ...	... ...	... 91	1 18	4 88	— 3 70				
Bowringpet ...	... 11	1 17	2 6	4 46	— 2 40	Rice, 2nd sort.	7·00	7·00	9·40
Chintamani ...	... ...	1 25	1 ...	4 10	— 3 10				
Mulbagal ...	... ...	... 77	2 12	3 5	— 0 93	Ragi	15·00	15·00	24·20
Sidlaghatta ...	... ...	1 4	... 36	4 13	— 5 77	Kulthi	12·00	14·0[illegible]	...
Chikballapur ...	2 5	1 6	5 7	5 81	— 0 74	Kadale	9·00	9·0[illegible]	9·20
Bagepalli ...	... 33	... 47	1 76	2 27	— 0 51				
Goribidnur ...	... 50	... 92	1 45	3 16	— 1 71				
Malur ...	.. 20	.. 89	2 61	4 64	— 2 3				
Srinivaspur ...	... ...	1 27	2 7	4 34	— 2 27				
Gudibanda ...	... 78	... 64	1 97	2 77	— 0 80				
District average...	... 36	.. 94	1 97	3 9[illegible]	— 1 99				
TUMKUR.									
Tumkur ...	.. ...	1 74	1 82	6 26	— 4 44				
Maddagiri ...	... 20	1 15	1 8	3 49	— 2 41				
Chiknayakanhalli ...	... ...	1 78	1 75	6 12	— 4 37	Rice, 2nd sort.	7·50	7·50	9·30
Sira ...	... ...	... 52	1 81	4 63	— 2 82				
Gubbi ...	... ...	... 98	1 78	4 33	— 2 55	Ragi	16·00	16·0[illegible]	25·90
Tiptur ...	... ...	1 76	... 67	5 77	— 5 10	Kulthi	12·00	12·0[illegible]	...
Pavagada ...	... ...	.. 89	... ..	3 ...	— 3 ..	Kadale	8·00	8·0[illegible]	9·60
Kunigal ...	... 39	.. 85	3 47	3 72	— 0 25				
Koratagere ...	... 20	1 8	1 30	3 56	— 2 26				
Turuvekere ...	... ...	1 15	2 2	4 8	— 2 6				
District average...	... 8	1 19	1 57	4 50	— 2 93				

District and Station.	Rainfall up to 8 A. M. on Saturday. This week.		Last ten years' average for the corresponding week.		Up to the end of the week from 1st January 1906. This year.		Average of past ten years.		Excess (+) or defect (—) of column 4 compared with column 5.		Price of food grains in seers per rupee and market fluctuations in prices of food grains.			
1	2		3		4		5		6		7			
	I.	c.	I.	c.	I.	c.	I.	c.	I.	c.		This week.	Past week.	Past ten years' fortnightly average.
												Seers.	Seers.	Seers.
MYSORE.														
Mysore ...	1	22	...	94	6	67	6	30	+0	47				
Chamrajnagar ...	...	...	1	54	2	23	3	94	—6	11				
Seringapatam ...	1	11	1	44	3	72	4	98	—1	26	Rice, 2nd sort.	8·00	8·00	10·17
Hunsur ...	...	16	1	75	3	46	7	31	—3	85	Ragi	13·50	14·00	21·44
Yedatore ...	...	16	1	31	3	78	5	53	—1	75	Kulthi	12·00	12·00	...
Heggaddevankote ...	...	74	1	12	3	64	11	4	—7	40	Kadale	9·00	9·00	10·24
Gundlupet ...	...	10	1	10	5	3	6	93	—1	90				
Nanjangud ...	...	..	1	5	2	69	6	64	—3	95				
T.-Narsipur ...	...	81	1	15	3	66	7	16	—3	50				
Malvalli ...	...	...	...	60	3	5	4	74	—1	69				
Mandya ...	...	52	...	96	4	54	5	30	—0	76				
Krishnarajpete ...	...	..	1	46	4	..	6	26	—2	26				
Nagamangala ...	..	...	1	50	5	82	5	31	+0	51				
District average...	...	37	1	23	4	3	6	65	—2	62				
HASSAN.														
Hassan ...	...	77	1	38	2	96	6	32	—3	36				
Manjarabad (Saklespur)	1	12	1	26	4	75	6	62	—1	87				
Arkalgud ..	..	23	1	18	4	47	6	5	—1	58				
Belur ...	...	23	1	19	4	48	6	63	—2	15	Rice, 2nd sort.	7·50	8·00	10·35
Channarayapatna ...	2	25	...	95	5	34	5	20	+0	14	Ragi	16·00	16·00	24·26
Arsikere ...	...	...	...	86	1	51	5	28	—3	77	Kulthi	10·00	11·00	...
Hole-Narsipur ...	...	50	1	5	5	41	5	57	—0	16	Kadale	8·00	8·00	9·85
Alur ...	...	62	1	57	2	69	6	33	—3	64				
District average...	...	72	1	18	[illegible]	95	6	...	—2	5				
SHIMOGA.														
Shimoga ...	...	...	...	71	4	74	4	83	—0	9				
Channagiri ...	...	...	...	67	1	87	4	18	—2	32	Rice, 2nd sort	7·20	7·75	11·99
Honnali ...	...	...	...	84	2	5	4	95	—2	90	Ragi	13·30	14·00	28·80
Shikarpur ...	...	...	...	38	...	38	4	18	—3	80	Kulthi	10·38	11·50	...
Sorab ...	...	..	..	50	..	52	3	24	—2	72				
Sagar ...	...	...	...	49	2	54	3	64	—1	10				
Nagar (Kallurkatte) ..	...	...	...	48	..	91	2	96	—2	5				
Tirthahalli ...	...	...	...	74	1	63	4	7	—2	44				
Kumsi ...	...	...	..	43	1	41	4	45	—3	4				
District average...	...	...	..	58	1	78	4	6	—2	28				
KADUR.														
Chikmagalur ...	...	...	1	47	3	27	6	50	—3	23				
Kadur ...	...	..	...	87	1	64	4	54	—2	90	Rice, 2nd sort	7·00	7·50	10·40
Tarikere ...	...	...	1	5	3	4	6	24	—3	20	Ragi	14·00	14·00	24·10
Koppa .	...	9	..	76	5	17	4	88	+0	29	Kulthi	9·00	10·00	...
Mudgere ...	...	...	1	30	3	68	7	18	—3	51	Kadale	8·00	8·00	10·00
Yedahalli ...	...	...	1	22	2	38	5	84	—3	46				
Sringeri ..	...	3	...	72	4	41	5	16	—0	75				
District average ..	..	2	1	6	3	37	5	76	—2	39				
CHITALDRUG.														
Chitaldrug ..	...	...	...	79	2	45	3	31	—0	86				
Challakere ...	...	..		31	...	12	2	79	—2	67	Rice, 2nd sort	7·50	7·50	10·45
Hiriyur ...	...	...	...	51	7	77	3	25	—1	48	Ragi	14·00	14·00	27·10
Holalkere ...	...	...	.	57	1	38	3	78	—2	40	Kulthi	11·00	11·00	...
Davangere ...	...	...	..	94	2	46	3	81	—1	35	Kadale	8·00	8·00	10·50
Molakalmuru ...	...	...	1	1	1	17	3	40	—2	23	Cholum	13·00	13·00	24·00
Jagalur ...	...	...	1	16	1	13	3	92	—2	79				
Hosdurga ..	...	...	...	46	1	71	2	92	—1	21				
Harihar ...	...	...	..	65	6	39	3	51	+2	88				
District average...	..	...	...	71	2	8	3	50	—1	42				
Provincial average...	...	21	1	...	2	64	5	6	—2	42				

Note—Rice (husked)—Oryza Sativa.
Ragi—Eleusine Corocana.
Kulthi—(Horse gram) Dolichos Biflorus.
Cholum—Sorghum Vulgare.
Kadale—(Bengal gram) Ciser Arietinum.

DISTRICT REPORTS.

8. Markets how supplied.

9. Progress of agricultural operations, state of standing crops, prospects and probable outturn of harvests, serious damage done to crops by insects or other natural calamities.

10. Prospects of season, tracts in which the rainfall has been insufficient, areas affected by scarcity, number of people under relief, and state of food stocks.

11. Public health.

12. Remarks as to the condition of agricultural stock, failure of pasturage of fodder, etc.

BANGALORE CIVIL AND MILITARY STATION.

	Normal.	*Current.*	
Prices of food grains—Rice	... 10 to 11	6½ to 7	seers per rupee.
Ragi	... 25 to 30	15 to 16	

Agricultural operation—Ploughing.

Cattle are in good condition.

Water and fodder sufficient.

BANGALORE CITY AND TALUKS.

8. Market well supplied.

9. Standing crops are in good condition. Manure is being collected on the fields. About 106 acres are reported to have been sown in Dodballapur and about five acres to have been harvested during the week. Vysakhi paddy is harvested in Anekal. There have been no agricultural operations in the other taluks.

10. Prospects of the season not very encouraging. Rain is badly wanted throughout the district. The price of food stocks continues to be steady.

11. Public health generally good. Fever prevails in parts of Hoskote and Kankanhalli and small-pox in parts of Dodballapur and Anekal.

12. Cattle generally good. Dry fodder and water are sufficiently available for the present. It is reported that in Dodballapur well sinking is stopped for the present in expectation of rain.

KOLAR.

8. Market fairly supplied, but prices are rising high.

9. There was no sowing during the week throughout the district. Vysakhi paddy is being harvested in some parts of Sidlaghatta and Bagepalli and cholum in the Bagepalli Taluk.

10. The prospects of the season are by no means encouraging. Rains are anxiously expected. Food stocks are available in moderate quantities.

11. Public health generally good.

12. Cattle healthy except in some parts oI Bagepalli where they are suffering from foot and mouth desease. Considerable difficulty is experienced for water for men and cattle.

TUMKUR.

8. Market well supplied.

9. Paddy in Maddagiri, Sira, Pavagada, Kunigal, Koratagere and Turuvekere; cholum in Sira; and sugar-cane in Gubbi, Tiptur and Kunigal are being harvested. Nat-ragi and cholum are sown in Pavagada. Standing sugar-cane crop in Tumkur; sugar-cane, paddy, nat-

ragi and cholum in parts of Sira; paddy and sugar-cane in Gubbi, and in parts of Tiptur are withering. Elsewhere they are fair. The following is the estimated outturn of crops :—

Maddagiri—Paddy 4 to 12 annas.

Sira—Paddy 4 to 8 annas, cholum 2 to 4 annas.

Pavagada—Paddy 4 annas.

Kunigal—Paddy 4 annas, sugar-cane 6 annas.

Koratagere—Paddy 4 annas.

Turuvekere—Paddy 2 to 8 annas.

10. Prospects of the season not encouraging. Food stocks are available for the present. Supply of water in wells is diminishing all over the district. Some tanks and kattes in parts of the district have received a small supply of water by the recent rains. 139 coolies are engaged in tank works started as ordinary expansions of public works in the Maddagiri Taluk.

11. Public health generally good, except that small-pox prevails in parts of Tiptur. It is subsiding in Gubbi.

12. Cattle are deteriorating in condition and the older ones are dying. In Maddagiri, Chiknayakanhalli, Gubbi and Tiptur, date leaves are used as fodder for cattle. The leaves of avenue trees also are used as fodder wherever it is found necessary. Foot and mouth disease reported to prevail in the Tiptur Taluk is subsiding in Honnavalli and is still raging in Nonavinkere.

MYSORE.

8. Market well supplied.

9. Standing crops such as cholum, sessamum, togari, castor and sugar-cane in parts of Chamrajnagar; sugar-cane in parts of Seringapatam and Nagamangala; cholum, castor, togari and sessamum in parts of Gundlupet; castor, mulberry, sugar-cane, cholum, togari and sessamum in parts of Nanjangud; sugar-cane, mulberry and cholum in parts of T.-Narsipur; sugar-cane, black and green grams in parts of Krishnarajpete are reported to be fairly good. They are reported to be withering for want of rain in parts of Hunsur, T.-Narsipur, Yedatore and Gundlupet. Cholum in parts of Seringapatam, T.-Narsipur and Mandya; cholum, sessamum, togari, tadagani and castor in parts of Krishnarajpete, and cholum and sessamum in parts of Nagamangala are being sown.

10. Prospects of the season have improved, but the standing crops are in urgent need of rain which is anxiously awaited. Food stocks are sufficient for the present.

11. Public health generally good, but small-pox is still prevailing in parts of Heggaddevankote.

12. Cattle healthy in all parts except Heggaddevankote and Malvalli where they are reported to be suffering from foot and mouth disease. Water and fodder are available for the present.

HASSAN.

8. Market fairly well supplied. Prices high.

9. Sugar-cane in Hassan, Belur, Channarayapatna, Hole-Narsipur and Alur, and paddy in Manjarabad are in a fair condition. Paddy and sugar-cane are withering in Arsikere for want of rain. Ragi, paddy, etc., sown in Arkalgud, Hole-Narsipur and Hassan are just springing up. The outturn of Vysakhi paddy in Hassan is estimated to be from 8 to 12 annas and of standing crops in Hole-Narsipur to be 8 annas.

10. Prospects of the season somewhat hopeful. More rain is wanted in all parts. Food stocks sufficient for the present.

11. Public health generally good. Small-pox is reported to be prevalent in some parts of the district.

12. Cattle generally healthy, but foot and mouth disease exists in parts of Manjarabad and Hole-Narsipur. Water and fodder are generally available except in parts of Arsikere.

SHIMOGA.

8. Market well supplied. Prices high. Rice is being imported from the Madras Presidency to meet the insufficiency in Shimoga and Kumsi.

9. Ploughing is in progress in tracts where rain fell. Kar-paddy under the Sulekere tank in Channagiri, and in the Sagar and Nagar Taluks, and sugar-cane in Sagar and Nagar are fair where water is still available. In other localities they are withering, especially in the malnad. Paddy seedlings in the malnad require rain. Arecanut trees are reported to be affected in parts of Sagar for want of moisture.

10. Rainfall is insufficient in Shikarpur and the malnad.

11. Public health generally good. Small-pox and cholera prevail in parts of Shikarpur and Sorab.

12. Supply of fodder is limited everywhere except in Nagar and Tirthahalli. Pasture that has newly sprung up is eaten up by white-ants in some parts of Shimoga. The small supply of water received by some tanks during the recent rains is drying up, and the scarcity of water is increasing.

KADUR.

8. Market fairly well supplied.

9. Ploughing continues in Tarikere, Kadur and Koppa. Sugar-cane in parts of Tarikere and paddy and ragi in parts of Mudgere are being sown. Standing sugar-cane crops in parts of Tarikere, Yedahalli, Chikmagalur, Kadur and Koppa and kar-paddy in parts Koppa are in fairly good condition. Kar-paddy in parts of Chikmagalur is being harvested. Ploughing and sowing are much delayed for want of rain in the district, and the ragi seedlings in parts where, they have sprung up are badly in need of rain. In several parts of the malnad taluks paddy is not sown for want of sufficient water.

10. Prospects of the season fair, but more rain is urgently needed. Food stocks are available and sufficient for the present.

11. Public health generally good, except that small-pox prevails in parts of Chikmagalur, Tarikere and Mudgere.

12. Cattle generally healthy, but their condition is poor. Anthrax is reported to prevail in some villages of the Amrithapura hobli in the Tarikere Taluk. Water and fodder are generally available. Water-supply is scanty in parts of Chikmagalur, Kadur and Tarikere and date leaves are used as fodder in parts of Kadur.

CHITALDRUG.

8. Market well supplied.

9. Harvesting operations are going on a very small scale. The outturn is as follows:—

Challakere—Paddy under kapile wells 8 annas.

Hiriyur—Cotton, ballar, togari 4 annas; ragi 2 annas; Ragi under kapile wells 8 to 10 annas; Paddy under kapile wells 8 to 10 annas.

Davangere—Paddy 8 annas.

Further ploughing operations have been stopped. More rain is anxiously looked for throughout the district.

10. Prospects of the season fair. Food stocks available.

11. Public health good.

12. Cattle healthy. Water and fodder procurable in limited quantities.

BANGALORE,
30th May 1906.

B. K. VENKATA VARADA IYENGAR,
Secy. to the Govt. of H. H. the Maharaja of Mysore,
Gen. & Rev. Dept.

Table showing the Monthly and Annual Rain-fall at Rain-fall Recording Stations in the State of Mysore during the year 1905.

Meteorological Division	District	Station.	January	February	March	April	May	June	July	August	September	October	November	December	Total I.	Total C.
Mysore	Bangalore	Bangalore ...	...	...	1·86	1·18	3·83	3·36	·54	10·37	3·07	7·83	1·59	0·11	36	74
		Hoskote ...	...	...	2·92	3·17	3·28	0·77	·49	7·72	2·48	4·57	1·80	0·05	28	25
		Dodballapur ...	...	0·82	3·08	0·25	4·09	2·79	·70	3·67	3·51	5·11	1·28	...	26	30
		Nelamangala ...	...	1·10	0·42	0·80	5·60	1·77	·07	6·98	1·49	3·72	...	...	23	95
		Kankanhalli ...	...	0·32	0·49	3·18	3·52	4·95	·11	3·96	1·38	3·37	0·72	...	25	00
		Magadi ...	...	0·24	1·30	0·70	2·84	0·40	·27	5·82	3·30	3·19	0·80	...	20	86
		Closepet ...	...	0·29	...	3·14	4·21	1·44	·12	6·89	0·97	5·16	2·33	...	27	05
		Anekal ...	...	...	1·54	2·19	6·06	2·22	·35	6·94	1·21	4·95	0·55	0·05	31	03
		Devanhalli ...	...	0·12	2·05	4·36	5·00	2·41	·11	3·96	3·26	6·85	0·45	...	30	57
		Channapatna ...	0·15	0·70	1·84	3·33	2·48	1·43	·15	6·66	2·71	5·20	1·30	..	28	95
		Average ...	**0·01**	**0·36**	**1·55**	**2·23**	**4·09**	**2·25**	**0·59**	**6·28**	**2·34**	**4·99**	**1·12**	**0·02**	**27**	**84**
	Kolar	Kolar ...	0·48	...	0·40	0·19	1·73	0·14	·35	3·00	1·54	5·53	3·13	0·35	17	37
		Bowringpet ...	0·08	0·28	1·65	0·50	1·43	1·67	·10	4·34	3·86	3·89	0·77	0·05	18	62
		Chintamani ...	0·19	0·14	1·47	2·62	3·89	0·97	·82	5·30	0·50	6·17	2·35	0·12	24	54
		Mulbagal ...	0·63	...	1·13	1·00	0·50	1·73	·80	8·58	1·13	5·68	2·54	0·13	23	87
		Sidlaghatta ...	0·95	...	1·25	0·77	2·51	2·70	·31	4.53	0·90	5·41	1·74	0·20	24	27
		Chikballapur ...	0·57	1·32	2·91	3·15	5·04	3·40	·52	4·62	1·35	3·39	1·81	...	27	88
		Bagepalli ...	0·09	..	0·49	.	4·13	2·50	0·68	6·86	0·50	6·69	0·38	0·09	22	41
		Goribidnur ...	0·15	...	0·55	0·48	2·99	3·18	0·85	7·05	2·60	3·52	0·71	...	22	06
		Malur ...	0·48	..	1·24	2·15	3·59	0·55	1·66	4·63	1·19	6·35	1·69	0·12	23	65
		Srinivaspur ...	0·12	0·08	2·30	0·68	2·05	1·12	2·32	6·04	0·38	6·04	1·21	0·10	22	44
		Gudibanda ...	...	0·46	0·42		4·31	4·93	3·76	10·76	0·33	7·81	0·08	..	32	86
		Average ...	**0·34**	**0·21**	**1·26**	**1·05**	**2·93**	**2·06**	**1·42**	**5·97**	**1·30**	**5·50**	**1·49**	**0·10**	**23**	**63**
	Tumkur	Tumkur ...	0·30	4·70	0·15	0·60	3·20	2·35	1·61	8·84	0·96	4·76	0·71	...	28	18
		Maddagiri ...	0·65	1·30	...	0·55	2·25	3·35	2·25	7·70	0·50	4·62	1·67	...	24	84
		Chiknayakanhalli ...	...	1·35	0·88	0·10	4·75	4·27	1·35	2·90	0·50	3·70	0·35	...	20	15
		Sira ...	0·76	...	0·42	0·13	4·59	1·42	0·63	3·41	...	1·85	2·33	..	15	54
		Gubbi ...	0·10	0·70	..	0·05	3·77	2·21	1·72	5·13	0·39	5·38	0·18	...	19	63
		Tiptur ..	...	.	0·87		2·40	2·80	2·05	6·00	0·80	3·40	0·10	..	24	42
		Pavagada ...	0·08	...		.	4·72	1·20	1·92	3·41	0·37	3·01	...	...	14	71
		Kunigal ...	0·02	1·32	0·30	0·15	5·60	0·47	1·77	6·03	1·49	3·82	0·79	...	21	76
		Koratagere ...	0·40	1·24	0·14	0·70	3·33	2·73	0·81	3·27	0·75	5·42	0·97	...	19	76
		Turuvekere ...		0·06	...	0·35	5·87	3·05	1.20	6·70	0·45	5·10	0·15	..	22	93
		Average ...	**0·23**	**1·07**	**0·28**	**0·26**	**4·65**	**2·38**	**1·53**	**5·34**	**0·62**	**4·11**	**0·72**	...	**21**	**19**
	Mysore	Mysore ..	...	...	...	0·80	5·95	1·63	2·31	2·51	0·46	5·55	0·54	...	19	75
		Chamrajnagar ...	..	...	1·62	3·27	8·22	0·61	0·18	2·37	1·01	7·70	1·32	...	26	30
		Seringapatam ...	...	0·28	...	·35	6·37	2·32	0·86	1·55	0·83	9·11	1·14	...	23	81
		Hunsur ...	...	...	0·08	0·60	8·05	2·50	2·09	2·85	1·21	5·02	0·60	...	23	00
		Yedatore ...	.	...	0·37	1·00	3·87	1·25	1·21	1·24	2·02	5·34	0·96	...	17	26
		Heggaddevankote ...	...	0·12	0·23	1·55	7·17	3·26	4·30	3·82	1·06	5·18	1·13	...	27	82
		Gundlupet ...	...	0·08	2·55	3·62	5·71	0·62	0·29	2·40	0·97	6·31	2·03	...	24	60
		Nanjangud ...	...	0·83	...	4·67	5·89	1·42	1·26	2·28	1·08	4·50	0·66	...	22	59
		T. Narsipur ...	...	0·10	0·20	2·97	6·06	2·80	0·62	2·95	0·65	6·43	0·56	...	23	34
		Malvalli ...	...	0·58	1·05	2·25	2·85	1·2	0·65	2·48	2·42	5·40	0·67	...	19	58
		Mandya ...	...	..	0·58	1·51	4·23	1·6	2·03	2·32	2·11	3·99	0·18	...	18	63
		Krishnarajpete ...	...	0·34	0·82	0·19	7·79	1·5	0·75	3·10	3·50	5·75	0·60	...	24	39
		Nagamangala ...	...	0·9	..	0·43	6·99	1·2	1·50	2·39	1·44	5·99	0·43	...	21	33
		Average ...	...	**0·25**	**0·58**	**1·86**	**6·09**	**1·70**	**1·39**	**2·48**	**1·44**	**5·87**	**0·83**	...	**22**	**49**
	Hassan	Hassan ...	...	0·19	0·09	0·09	4·09	1·9	5·31	2·65	2·02	8·54	0·20	...	25	12
		Manjarabad ...	...	.	0·11	0·91	5.41	8·8	30·04	7·32	4·17	7·77	0·87	...	65	46
		Arkalgud ...	...	0·55	...	1·00	7·35	2·9	8·37	2·12	0·70	11·08	0·52	...	34	60
		Belur ...	...	0·08	0·08	0·70	5·12	2·8	8·04	2·56	1·14	10·96	0·28	...	31	31
		Channarayapatna ...	...	0·70	..	0·43	4·77	1·0	1·72	1·77	1·47	6·43	0·29	...	18	64
		Arsikere ...	...	...	0·65	0·13	5·75	3·79	1·74	4·72	1·34	6·43	0·40	...	24	95
		Hole-Narsipur ...	...	0·46	0·30	0·53	7·78	1·[illegible]	4·31	1·48	0·30	6·77	0·51	...	24	01
		Alur ...	...	0·04	.	1·06	7·59	4·[illegible]5	10·48	3·77	0·80	7·62	0·76	..	36	37
		Average ...	...	**0·25**	**0·15**	**0·61**	**5·98**	**3·34**	**8·75**	**8·30**	**1·49**	**8·20**	**0·48**	...	**32**	**55**
	Shimoga	Shimoga ...	...	...	...	0·75	5·97	2·[illegible]4	6·28	3·82	1·11	6·35	1·04	...	27	46
		Channagiri ...	...	...	0·73	...	6·96	2·[illegible]4	3·59	3·51	1·30	3·60	1·26	...	23	59
		Honnali ...	...	0·61	...	.	5·65	2·[illegible]9	1·44	2·22	1·20	4·02	0·32	...	17	85
		Shikarpur ...	...	...	...	0·32	3·40	2·[illegible]2	6·14	3·58	0·97	4·27	0·70	...	21	90
		Sorab ...	..	...	...	...	3·62	6·[illegible]0	11·55	5·30	2·84	4·32	0·69	...	35	22
		Sagar ...	...	...	...	..	3·57	6·[illegible]	17·88	12·76	2·68	4.24	0·78	...	48	12
		Nagar ...	...	.	...	..	3·73	20·[illegible]9	38·54	11·39	4·18	9·20	1·19	...	88	72
		Tirthanalli ...	...	...	...	...	3·30	11·[illegible]6	39·11	18·88	6·66	3·86	0·84	...	83	81
		Kumsi ...	..	..	0·35	1·15	4·25	2·[illegible]9	6·14	5·76	0·95	4·47	0·21	..	25	77
		Average ...	...	**0·07**	**0·12**	**0·25**	**4·49**	**6·[illegible]3**	**14·52**	**7·46**	**2·43**	**4·93**	**0·78**	..	**41**	**38**
	Kadur	Chikmagalur ...	...	...	1·03	0·52	5·32	1·30	4·42	1·42	1·06	7·51	1·53	...	24	61
		Kadur ...	...	...	1·45	0·13	5·42	1·37	1·28	1·61	0·60	3·10	0·43	...	15	89
		Tarikere ...	...	...	...	...	10·95	2·50	7·00	3·51	2·22	6·57	0·47	...	33	25
		Koppa ..	...	...	...	0·36	7·89	14·28	40·69	12·69	5·65	4·35	3·41	...	89	12
		Mudgere ...	...	...	0·05	1·13	8·50	9·78	29·22	7·88	3·15	9·27	0·72	...	69	80
		Yedahalli ..	...	...	...	0·30	9·25	5·07	16·31	6·58	3·19	5·54	1·28	...	47	52
		Sringeri ...	...	...	...	0·29	5·64	1·[illegible]1	38·71	23·22	8·50	10·58	2·17	..	104	23
		Average ...	...	..	**0·36**	**0·38**	**7·57**	**7·21**	**19·68**	**8·14**	**3·48**	**6·70**	**1·40**	...	**54**	**92**
	Chitaldrug	Chitaldrug ..	...	0·17	...	...	2·10	1·76	1·68	1·58	1·33	4·79	0·77	...	16	18
		Challakere ...	...	0·18	0·13	...	1·11	·54	0·61	1·81	0·36	2·09	...	.	7	83
		Hiriyur ...	0·32	0·10	...	..	3·88	·91	1·95	4·71	0·14	3·09	0·72	...	15	73
		Holalkere ...	...	...	0·09	0·22	3·01	·59	1·28	5·70	0·20	8·01	1·95	...	21	05
		Davangere ...	...	...	...	...	4·77	·46	0·15	7·18	0·52	8·75	...	..	24	83
		Molakalmuru ...	...	...	.	..	5·24	·11	0·33	4·64	0·27	3·16	...	...	16	75
		Jagalur ...	...	...	0·30	0·35	4·90	2·24	0·33	2·62	0·33	2·35	...	...	13	42
		Hosdurga ..	...	...	0·88	0·30	6·30	·79	1·69	3·05	0·26	7·12	3·10	...	23	49
		Harihar ...	..	...	0·20	0·16	1·10	·84	0·67	5·54	0·29	7·50	...	...	16	30
		Average ..	**0·04**	**0·05**	**0·18**	**0·11**	**3·60**	**1·22**	**0·97**	**4·09**	**0·41**	**5·20**	**0·72**	...	**17**	**29**
		Average for the State ...	**0·08**	**0·28**	**0·56**	**0·84**	**4·92**	**4·40**	**6·35**	**5·38**	**1·69**	**5·69**	**0·94**	**0·01**	**30**	**16**

GOVT. OF H. H. THE MAHARAJA OF MYSORE,
GENERAL AND REVENUE SECRETARIAT,
Dated Bangalore the 25th February 1905.

B. K. VENKATA VARADA IYENGAR,
Secy. to Govt., Gen. & Rev. Dept.

LIST OF PRIZES TO BE AWARDED AT THE HORTICULTURAL SHOW TO BE HELD AT THE LAL-BAGH ON 2ND AUGUST 1906.

CLASS I.—PERENNIAL FLOWERS IN POTS.

No.	Description	Rs.
1.	Best Standard Roses, in six varieties and six pots	8
2.	Second best do in do do	5
3.	Best Dwarf Roses in do do	6
4.	Second best do in do do	4
5.	Best General Collection of Roses not including the above ; not less than twelve pots and not exceeding twenty	15
6.	Second best do do do	10
7.	Third best do do do	5
8.	Best new Roses, exhibited for the first time	8
9.	Second best do do	5
*10.	Best General Collection of Foliage Plants, without duplicates	25
*11.	Second best do do	15
*12.	Best General Collection of Ferns, without duplicates	25
*13.	Second best do do	15
14.	Best Collection of Palms, one plant of each species	8
15.	Best Group of Aralias and Panax, one plant of each species	6
16.	Best Caladiums, including only one plant of each variety	7
17.	Second best do do do	5
18.	Best Collection of Gladioli, not less than six varieties	6
19.	Second best	4
20.	Best Collection of Anthuriums including only one plant of each variety	8
21.	Best Collection of Dracænas do do do	8
22.	Best New Geraniums, exhibited for the first time ; one pot of each	7
23.	Best Double Geraniums, in six or more varieties, not exceeding 25 pots	6
24.	Second best do do do	4
25.	Best Single Geraniums, in eight or more varieties, not exceeding 25 pots	6
26.	Second best do do do	4
27.	Best Ivy-leaved Geraniums, double or single, not exceeding 25 pots	5
28.	Best Dahlias	7
29.	Second best Dahlias	5
30.	Best Achimenes, not less than twelve varieties	6
31.	Second best do do	3
32.	Best Tuberous-rooted Begonias, not less than eight varieties	8
33.	Second best do do	5
34.	Best Perennial Phlox, in three or more varieties	5
35.	Second best do do	3
36.	Best Pansies, in eight or more varieties, but not exceeding 25 pots	6
37.	Second best do do do	3
38.	Best Carnations, in three or more varieties	5
39.	Second best do do	3
40.	Best Cyclamen	5
41.	Best Gloxinias	6
42.	Best Fuchsias in four or more varieties	5
43.	Best Double Petunias, in four or more varieties	6
44.	Second best do do	4
45.	Best Verbenas, in six or more varieties, but not exceeding 15 pots	5
46.	Second best do do do	3
47.	Best Chrysanthemums, in eight or more varieties, but not exceeding 25 pots	7
48.	Second best do do do	5
49.	Best Cannas in twelve or more varieties	7
50.	Second best do do	5
51.	Best Novelties in Perennials, exhibited for the first time, one plant of each	6
	Total	353

CLASS II.—ANNUAL FLOWERS IN POTS.

*1.	Best General Collection of Annuals in flower	8
*2.	Second best do do	5
3.	Best Double Sunflower	3
4.	Best Asters, in six or more varieties	6
5.	Second best do do	4
6.	Best Nasturtiums, in six or more varieties	4
7.	Second best do do	2
*8.	Best Balsams, in six or more varieties	4
9.	Second best do do	
10.	Best Phlox Drummondi, in ten or more varieties limited to fifty pots	6
11.	Second best do do	4
12.	Best Single Petunias, in six or more varieties	5
13.	Second best do do	3
14.	Best Lobelia	3
15.	Best Salpiglossis	4
16.	Second best do	2
17.	Best Zinks, in ten or more varieties, limited to 50 pots	4
18.	Second best do do	2
	Total	71

CLASS III.—CUT FLOWERS.

No.	Description	Rs.
1.	Best Arrangement of Flowers, &c., in a vase	8
2.	Second best do do	6
3.	Third best do do	3
*4.	Best Hand-Bouquet	6
*5.	Second best do	4
6.	Best Collection of Cultivated Flowers not less than twelve species or varieties ...	6
7.	Second best do do	3
8.	Best Collection and Arrangement of Wild Flowers and Grasses	5
9.	Best Arrangement for Dinner Table	8
10.	Second best do	5
11.	Best Cut Roses, not less than twelve varieties to be exhibited singly on Exhibition desks	6
12.	Second best do do do do	4
13.	Best Dahlias do do do do	3
14.	Second best do do do do	2
15.	Best Chrysanthemums do do do	3
16.	Second best do do do do	2
	Total ...	74

Mr. Geo. Hodson's prize of Rs. 10 for the most artistic arrangement of cut flowers in a vase, basket or bowl; to be competed for by children under twelve years of age. The arrangement of the flowers to be done at the Show by the child, who may be attended by a native servant only.

CLASS IV.—FRUITS.

*1.	Best Collection of Fruits of all kinds arranged in a basket	10
*2.	Second best do do	7
3.	Third best do do	4
4.	Best Apples, in six or more varieties	10
5.	Second best do do	7
6.	Best Peaches, in two or more varieties	7
7.	Second best do do	4
8.	Best Figs	4
9.	Second best do	2
*10.	Best Bananas (only of the finest varieties)	5
11.	Second best do do	3
*12.	Best new Mangoes	6
13.	Best Raspberries	3
14.	Best Grapes, in three or more varieties	6
15.	Second best do do	4
16.	Best Guavas	4
17.	Best Hill Gooseberry	2
18.	Best Pumeloes	3
	Total ..	91

CLASS V.—VEGETABLES.

*1.	Best Potatoes, in six or more varieties, half a maund of each	10
2.	Second best do do do	6
3.	Third best do do do	4
4.	Best Cabbage, not less than three, and excluding Drumhead	5
5.	Second best do do do	3
6.	Best Brussels Sprouts	4
7.	Best English Carrots	5
8.	Second best do	3
9.	Best Blanched Celery	5
10.	Second best do	3
11.	Best Cabbage Lettuce	3
12.	Best Cos Lettuce	3
13.	Best Endive	2
14.	Best Parsnips	4
15.	Best Beetroot	4
16.	Best Green Peas	6
17.	Second best do	3
18.	Best Onions	4
19.	Best Asparagus	5
*20.	Best Custard Marrow	4
21.	Best Turnips	4
22.	Best Cauliflower, not less than three	5
23.	Second best do	3
24.	Best Knol-khol	3
25.	Best Cho-cho	2
26.	Best Tomato, not less than three varieties	3
*27.	Best Basket of English Vegetables	10

CLASS V.—VEGETABLES—*concld.*

No.	Description.	Rs.
28.	Second best of English vegetables	6
29.	Third best do do	3
30.	Best Collection of Sweet Herbs	5
31.	Best Bendekayi	2
32.	Best Hagalakayi	2
33.	Best Gorikayi	2
34.	Best Huralikayi	2
35.	Best Padavalakayi	2
36.	Best Budi Kumbalakayi	2
37.	Best Collection of Country Vegetables in varieties other than those mentioned above	5
	Total ...	146
	Grand Total ...	735

General Conditions.

1. Prizes marked by an asterisk are open to the whole Province, as also to the Presidency of Madras.

2. In view to arrangements being made for staging plants, it is requested that exhibitors will notify to the undersigned, four days prior to the Show, what number of pots they intend to enter and for what prize they intend to compete. Plants intended for competition should be delivered in the Conservatory before 4 P. M. on the day previous to the Show.

3. Cut Flowers may be delivered up till 2 P. M. on the day of the Show, but not later if intended for competition.

4. No prize shall be awarded unless there are at least two competitors for it, except in cases of rare excellence, when the Judges will use their own discretion.

The number of exhibits in all classes and sections should exceed the number of prizes offered, otherwise the Judges will be authorised to reduce the full value of such prizes.

5. It shall also be competent for the Judges to reduce the amount of prizes if, in their opinion, the articles exhibited do not merit the full sums.

6. Obtrusive staging, overcrowding, packing to conceal blemishes, and artificial suppor to blooms, etc., will be judged as defects to an exhibit, preference being given to natura growth and artistic arrangement.

7. Where a number limit is laid down, any exhibit exceeding that number shall be isqualified.

8. Where one plant of each species or variety is specified as a condition, any exhibit containing duplicates shall be disqualified.

9. If funds are available, the Judges may award special extra prizes in cases of exceptional merit.

10. All exhibits sent for competition must be *bona fide* the produce of, or have been raised by, the exhibitors; and unless otherwise specified, must have been grown in Bangalore.

The Judges may withhold any prize untill proof of these conditions be produced. Contractors bringing up fruit and vegetables for competition in their own name are disqualified.

11. Exhibitors will not be permitted to remove their exhibits until the Show is closed, and gardeners and others found offering articles for sale before 6 P. M. on the day of the Show shall be summarily ejected.

12. The names of exhibitors can only be attached to exhibits when the judging has been completed. Plant labels will be supplied by the Show Executive, subject to the approval of the same.

The following Rules for awarding Medals at the Horticultural Shows are hereby notified to the public.

The Government of His Highness the Maharaja have sanctioned the grant of medals in addition to the usual money prizes offered at the half yearly horticultural shows, subject to the following conditions :—

(1) The medals will consist of a gold medal for classes I and II, a silver medal for class IV and a bronze medal for class V.

(2) These medals will be awarded by the Judges, at their discretion, at the Summer Show held in July or August in each year.

(3) The following exhibitors will be qualified for the award of a medal :—

(*a*) The exhibitor of the best all-round exhibit in the appropriate class or classes taking the two shows of the calendar year together.

(*b*) The exhibitor of an exhibit of more than ordinary excellence in any sub-class.

(*c*) The exhibitor of any specially meritorious novelty.

(4) No exhibitor who has been awarded a medal in any class will be qualified to receive another medal in that class during the three calendar years succeeding that in which he has received the medal.

(5) No exhibitor will be qualified to receive a medal who is not the *bona fide* cultivator of his exhibit, or the actual occupant of the garden in which the exhibit was raised, *e.g.*, no contractor, who has merely purchased fruit or vegetables exhibited will be eligible.

(6) It will be open to the Judges to withhold any or all the medals in any year on the ground of deficiency of merit in the exhibits.

J. CAMERON,
Supt., Govt. Gardens.

Government Press, Bangalore—1906.

Rec
Rec
11.6.06

621

THE MYSORE GAZETTE.

EXTRAORDINARY.

PUBLISHED BY AUTHORITY.

MYSORE, THURSDAY, JUNE 7, 1906.

NOTIFICATION.

No. Fl. 8238—G. M. 227-05-9, dated 7th June 1906.

His Highness the Maharaja has been pleased to mark, in the manner shown below, his appreciation of the services rendered by officers of Government, non-official gentlemen and committees, in connection with the reception of Their Royal Highnesses the Prince and Princess of Wales at Mysore and Bangalore.

1. The thanks of His Highness will be conveyed to the following officers for the care and forethought brought to bear by them on the supervision of the various arrangements connected with the Royal visit, which have contributed to make it a success :—

1. Mr. E. Maconochie, I.C.S., Private Secretary to His Highness the Maharaja.
2. Rao Bahadur Mr. C. Madiah, late Member of Council.
3. Lt.-Col. J. Desaraj Urs, Chief Commandant.
4. Mr. W. McHutchin, Chief Engineer.
5. Lt.-Col. J. Smyth, I.M.S., Senior Surgeon.
6. Lt.-Col. R. G. Jones, Military Assistant.
7. Mr. F. E. C. Carr, Inspector General of Police.
8. Rai Bahadur Mr. M. Muttanna, Conservator of Forests.
9. Mr. H. H. Sparkes, Deputy Commissioner, Mysore.
10. Mr. D. Devaraj Urs, Deputy Commissioner, Bangalore.
11. Capt. Traill, Superintending Engineer.
12. Mr. H. P. Gibbs, Chief Electrical Engineer.

2. His Highness' thanks will also be communicated to Mr. Larmour of Messrs. Lazarus & Co., and to the four committees mentioned below for their

commendable exertions in connection with the reception of Their Royal Highnesses :—

1. Bangalore Reception Committee.
2. Mysore Reception Committee.
3. Mysore Exhibition Committee.
4. Chamarajendra Technical Institute Foundation Stone Committee.

3. (*a*) Khillats have been presented by His Highness the Maharaja in open Durbar to the following officers in recognition of their services :—

	Name.		Designation.
1.	Mr. D. Sitarama Rao	...	Secretary, Reception Committee, Mysore.
2.	„ B. S. Venkatachar	...	Executive Engineer.
3.	„ P. S. Achyuta Rao	...	Civil Surgeon.
4.	„ B. P. Raghavalu Naidu	...	Executive Engineer.
5.	„ B. Subba Rao	...	Do
6.	„ D. M. Narasinga Rao	...	Registrar of the Secretariat, late Under-Secy.
7.	„ R. Puttanna	...	Personal Assistant to the Chief Commandant.
8.	„ C. Venkata Rao	...	Vice-President, Mysore.
9.	„ L. Krishna Rao	...	Superintendent of Police.
10.	„ N. Subba Rao	...	Head-Quarter Superintendent of Police.
11.	„ K. Sreenivasa Rao	...	Assistant Commissioner.
12.	„ C. S. Balasundaram Iyer	...	Secretary, Bangalore Reception Committee.
13.	„ A. Ananda Rao	...	Secretary, Exhibition Committee.
14.	„ Mahomed Jaffer	...	Superintendent of Police.
15.	„ Zahirudin Meccai	...	Do
16.	„ Y. V. Krishna Murti	...	Do
17.	„ Chamaraj Urs	...	Regimentdar, Imperial Service Regiment.
18.	„ M. G. Rama Rao	...	Assistant Conservator of Forests.
19.	„ Mahomed Usman	...	Assistant Surgeon.
20.	„ T. G. Lakshman Rao	...	Head Master, Engineering School.
21.	„ C. Krishna Rao	...	Amildar, Chamarajnagar.
22.	„ H. Srinivasa Rao	..	Assistant Conservator of Forests.
23.	„ M. Ranga Rao	...	Assistant Commissioner on special duty.
24.	„ G. Subbusamy Iyer	...	Superintendent, Industrial School.
25.	„ B. C. Sreenivasiyengar	...	Assistant Engineer.
26.	„ K. Muthaiya	...	Temporary Assistant Conservator of Forests and Officer in charge of Game Preserves.
27.	„ M. G. Krishnasami Rao	...	Amildar, Bangalore Taluk.
28.	„ C. Venkata Rao	...	Superintendent, Special Reception Office.
29.	„ R. S. Nagavakar	...	Police Inspector.
30.	„ Gopalkrishnaiengar	...	Amildar, Seringapatam.
31.	„ T. Venkatramiah	...	Do Mysore.
32.	„ S. Narayan Rao	...	Do Bowringpet, on Exhibition duty.
33.	„ T. Venkataramiah	...	Do Heggaddevankote.
34.	„ Jagannatham Pillay	...	Health Officer, Mysore.
35.	„ G Krishnamurti Naidu	...	Sub-Assistant Conservator of Forests.
36.	„ Basavaraj Urs	...	Probationary Assistant Superintendent of Police.
37.	„ Mahomed Moosa	...	Commandant, Palace Barr.
38.	„ Syed Abdul Rahman	...	Commandant, 1st Regiment.
39.	„ Krishnasami Iyer	...	Sub-Division Officer, Trust Board, Mysore.
40.	„ Nanjaraj Urs	...	Rissaldar.
41.	„ Sreenivasa Rao Salikay	...	Do
42.	„ H. F. Marker	...	Sub-Division Officer, Trust Board, Mysore.
43.	„ Ramachandra Rao	...	Assistant Superintendent, Industrial School.
44.	„ Gulam Mahomed Meccai	...	Deputy Amildar.
45.	„ Tippu Sultan Ali Khan	...	Probationary Assistant Superintendent of Police.
46.	„ Mirza Mahomed Ismail	...	Do
47.	„ V. S. Rajagopalachari	...	Head-Quarter Inspector of Police.

	Name.		Designation.
48.	Mr. Mahomed Nijamudin	...	Railway Inspector.
49.	„ R. Shama Rao	...	Police Inspector.
50.	„ Mahomed Jaffer Mecri	...	Do
51.	„ Syed Ahmed	...	Jámadar.
52.	„ Hari Rao	...	Subedar Major.
53.	„ Varadarajalu Naidu	...	Subedar.
54	„ Sha Abdul Hassan	...	Do
55.	„ Peer Khan	...	Subedar.

(*b*) Souvenirs in the shape of watches bearing the inscription "Presented by His Highness the Maharaja for services during Royal Visit, 1906" will be forwarded to the following officers with letters expressing appreciation of their services:—

Name.			Designation.
Mr. J. Cameron	...	...	Superintendent, Government Gardens.
„ C. H. Yates	...	...	Superintendent, Government Press.
„ H. Donne	...	...	Assistant Secretary, Military Department.
„ J. E. A. D'Cruz	...	...	Executive Engineer, Trust Board, Mysore.
Miss Ayachammal	...	...	Civil Surgeon.
Mr. R. W. Simpson	...	...	Superintendent, Government Stables.
„ F. A. Steel	...	...	Assistant Engineer.
„ Hardaker	...	...	Palace Department.
„ T. F. Wilkinson	...	...	Assistant Superintendent of Police.
Miss Rajagopal	...	...	Superintendent, Girls' Schools, Bangalore.
Mr. Frank Joseph	...	...	Electric Operator.
„ O'Doherty	...	...	Police Inspector.
Miss Holman	...	...	Apothecary.
Mr. Norris	...	...	Police Inspector.
„ Edwards	...	...	Do
„ Searle	...	...	Do

4. His Highness has been pleased to sanction an increase of the pension of Field Inspector Oosu Meah from Rs. 35 to Rs. 100 per mensem and the grant to him of a bonus of Rs. 1,000 in consideration of his exceptional services in connection with the Khedda operations.

5. The payment of a bonus to the following officers and officials is also sanctioned :—

(*a*) *A bonus of two months' pay to*—

Mr. H. Srinivasa Rao, Assistant Conservator of Forests.
„ K. Muthaiya, do
B. Chendrasekharaiya, Ranger.
C. Appiah, Forester.
K. Venkatanaranappa, Forester.

(*b*) *A bonus of one month's pay to*—

Mr. G. Krishnamurti Naidu, Sub-Assistant Conservator.
V. Govindarajalu Naidu, Clerk, Conservator's Office.
V. Kesava Rao, Clerk, Forest Office, Mysore.
L. Krishnasami Rao. Clerk, State Shikari Office.
Krishnamurti Rao, Hospital Assistant, on special duty.
L. R. Mascarenhas, Ranger.
V. Krishnamurti Rao, Forester.
K. Srikantaiya, Forester.
K. Iyappa, do

(c) A bonus of half a month's pay to—

1. Krishnaswami Mudaliar, Sub-Overseer Mysore City Improvement Trust Board.
2. Parthasarathi Mudaliar, Draftsman, do
3. Nizam Ali Khan, Surveyor, do
4. Venkataramana Chetty, Clerk, do
5. Govindaraja Mudaliar, Clerk, do
6. Kuppusami Mudaliar, Sub-Overseer, do
7. Edwards, Surveyor, do
8. Raghupati Naidu, Sub-Overseer. do
9. Punyakoti Mudaliar, Taluk Mestri, do
10. Rajacharry, Palace Mestri.
11. Y. Lakshminarnappa, Sale Room Clerk, Industrial School.
12. N. Subba Rao, 3rd Assistant, Educational Branch, Industrial School.
13. A. V. Sundara Sastri, 1st Assistant, do
14. T. K. Ramaswamiah, Head Master. do
15. J. Rozario, Carpentry Mestri.
16. Giddanna Mestri, Pottery Instructor.
17. G. K. Sitarama Iyengar, Store-keeper.
18. Reuben, Overseer, Mysore Division, P. W. D.
19. J. W. H. Ellis, Mandya Division, P. W. D.
20. Armugam Mudaliar, Sub-Overseer, Marikanave Division, P. W. D.
21. T. Subba Rao, Sub-Overseer, Yedatore, P. W. D.
22. Damodara Mudaliar, Taluk Mestri, Mysore, P. W. D.
23. Iyacannu Pillay, Sub-Overseer.
24. Raghavendra Rao, Overseer, P. W. D., Heggaddevankote.
25. C. Krishnaiya, Chief Constable, Mysore City.
26. Anantaramiengar, do do
27. Devaraja Urs, do do
28. Mellor, do
29. Howell, do
30. Anderson, do
31. Dunning, do
32. Walton, do
33. Siddaramappa, do
34. Subbanna, Head Constable.
35. Ekambaram Mudaliar, Jamadar.
36. Sreenivasaiengar, do
37. Ghouse Sheriff, do
38. Appanna, do
39. Annaiya, do
40. Eswara Rao, do
41. Venkata Rao, Recruit.
42. V. Lakshmana Rao, Municipal Engineer, Mysore.
43. Kesavaiengar, Surveyor, Mysore City Municipality.
44. K. V. Puttanna, Manager, do
45. M. A. Appalachar, Municipal Overseer, do
46. Annadore Iyer, Water Inspector, do
47. Gulam Raja Baig, Assistant Sanitary Inspector, do
48. Venkat Rao, Store-keeper, do
49. Venkatakrishnaiya, Accountant, D. P. W., do
50. N. Srikantiah, Head Munshi, do
51. G. Krishna Rao, Clerk. do
52. Puttu Rao *alias* Subba Rao, Accountant, do
53. Ramachandra Rao, Deputy Munshi, do
54. G. Subba Rao, Town Hall Mutsaddi, do
55. Ramachendra Chetty, Octroi Daroga, do
56. Nanjappa, Conservancy Overseer, do
57. Ramaswamy, Bharamarga Manegar, do

58. M. Krishnasami Rao, Head Clerk, Trust Board, Mysore.
59. E. S. Sundara Iyer, 3rd Clerk, do
60. Charles Rozario, Sub-Overseer, do
61. Mahomed Tayer, do do
62. C. Venkataratnam, Taluk Mestri, do
63. Narayanasami Mudaliar, Head Draftsman, do
64. Bindu Rao, Clerk, Forest Settlement Office.
65. Venkatramiah, Clerk, District Forest Office, Mysore.
66. Srinivasa Rao, Clerk, Exhibition Office.
67. Basappa, do
68. Devaraja Urs, do
69. Ramachandra Rao, do
70. C. Ananda Rao, do now in the District Treasury.
71. A. Setu Rao, do Compositor, G. T. A. Press, Mysore.
72. Lakshman Rao, Overseer of the Curzon Park.
73. Syed Abdul Gaffer, Division Commander, E. Division.
74. Mir Abbas Ali, do C. do
75. Mahomed Fazel, do D. do
76. Furzalla Khan, Jamadar, D. Division.
77. Narayanasmi do B. do
78. Tyagaraj, Jamadar, Quarter Master.
79. Arokiam, Jamadar, E. Division.
80. Azeem Khan, do A. do
81. P. R Narasinga Rao, Clerk, Carriage Department.
82. Mahomed Oosman, Pensioned Subedar.
83. S. Vishakantaiya, Clerk in charge of Government House.
84. T. S. Ramachandra Rao, Clerk, Military Assistant's Office.
85. Sivarama Iyer, Municipal Overseer.
86. Nagaratna Mudaliar, Sub-Overseer.
87. Venkatachar, Tank Inspector.
88. Abdul Rahiman, do
89. Mahomed Khan Shirani, Lance Naik.
90. P. A. Krishnasami Iyer, Clerk, Special Office.
91. V. K. Srinivasa Rao, do
92. B. Seshagiri Rao, Clerk, General and Revenue Secretariat.
93. T. V. Krishniengar, do do
94. Mr. Everard, Police Inspector.
95. R. Narain Iyer, do
96. M. Rama Rao, do
97. Sirajuddin Mahomed, Police Inspector, Mysore Taluk.
98. S. Rangasamiengar, Police Inspector, Mysore Head Quarter Office.
99. Krishnappa, Police Inspector.
100. Rangaraj Urs, Police Inspector, Gundlupet.
101. Fazalulla Khan, Police Inspector.
102. Bhimasena Rao, do
103. Latiff Ali, do
104. H. Subba Rao, do
105. Venkatavaradachar, do
106. Nanjappa, do
107. Devasikamaniengar, Police Inspector, Nanjangude.
108. Nagesa Rao, Police Inspector.
109. Vasudeva Rao, do
110. Krishna Rao, do
111. Govinda Naidu, do
112. Rudrappa, do
113. Nataraja Iyer, do
114. Ghulam Ali Sheriff, do

115. S. Narasimiengar, Clerk, Military Assistant's Office.
116. B. Narayaniengar, do do
117. Abdul Khalik Amin, Nazim, Ganjam Gunbaz.

(*d*) *A money present of Rs. 20 to*—

1. Srikantaiya ...
2. Bomma ...
3. Billekencha ...
4. Hulimara ...

} Forest Guards.

6. His Highness has noted with approval the services rendered, in connection with the Royal reception, by the following non-official gentlemen :—

1. Mr. A. H. Jackman, Contractor, Mysore.
2. „ Sundram Pillay, do
3. „ Mahamed Sillar, do
4. „ Siddappa, Contractor, Trust Board, Mysore.
5. „ Yagappa, Taskworker under the Trust Board, Mysore.
6. „ Krishnasami Mudaliar, Contractor, Bangalore.
7. „ Chinnasami Pillay, do
8. „ Thathappa, do
9. „ Sahukar Mohadin Sab, Contractor, Mysore.

By Order,

K. S. CHANDRASEKHARA AIYAR,
For *Secy. to Govt., Gen. & Rev. Depts.*

Govt. Branch Press, Mysore.—8-6-1906.

827

The Mysore Gazette.

Vol. 41.] PUBLISHED BY AUTHORITY. [No. 23.

BANGALORE, THURSDAY, JUNE 7, 1906.

☞ Separate paging is given to the Parts in order that they may be filed as distinct compilations.

CONTENTS.

PART I.—Notifications by the Government of His Highness the Maharaja of Mysore.

PART II.—Notifications by the Government of India; The Hon'ble the Resident in Mysore; Chief Judge; Survey and Inam Superintendent; Comptroller; Chief Engineer; Mysore State Railway; Amrut Mahal Department; Inspector-General of Registration; Senior Surgeon; District and Sessions Judges; Sub-Judges; Deputy Commissioners of Districts; Forest Officers; Presidents, Bangalore and Mysore City Municipalities; Season Reports; Mortuary and Meteorological Statements; Postal Notices; Civil and Military Station Notifications, &c.

PART III.—Legislative Measures and Rules thereunder.

PART IV.—Official Papers.

PART I.

Notifications by the Government of His Highness the Maharaja of Mysore.

GENERAL AND REVENUE.

No. 12342—*San.* (15-05)-14, *dated* 30*th May* 1906.

It is hereby notified for general information that the place mentioned hereunder in the District of Hassan will be deemed to be an infected area for the purposes of the Regulations issued with Notifications Nos. 9383—Mis. F. 21-96 and 9384—Mis. F. 21-96, dated the 10th February 1898, under the Epidemic Diseases Regulation:—

Place.	*Taluk.*
Alur Petta	... Alur Sub-Taluk.

No. 12516—*L. B.* (12-05)-13, *dated* 1*st*—5*th June* 1906.

It is hereby notified for general information that Mr. Kappanna, patel of Kommaghatta in the Bangalore Taluk, has, under clause (*f*) of para 7 of the rules framed under the Local Boards Regulation, been elected as a member of the Bangalore Taluk Board, in place of Mr. Shamanna, deceased.

No. R. 14804—*L. R.* 628-05-5, *dated* 16*th May* 1906.

Under Section 6 of the Land Acquisition Regulation, No. VII of 1904, it is hereby declared that the lands described hereunder are required for a public purpose, viz., for inclusion in the Sunka Tannur tank in the French Rocks Sub-Taluk; and under Sections 7 and 3 (*c*) of the said Regulation, the Assistant Commissioner in charge of French Rocks Division office is authorized to take orders for the acquisition of the said lands:—

District	Taluk	Hobli	Village	Name of Khatedars	Description of land: Survey No.	Description of land: Dry, wet or garden	Total extent (A. g.)	Assessment	Extent to be acquired (A. g.)	Boundaries: East	Boundaries: West	Boundaries: North	Boundaries: South	Remarks
Mysore	French Rocks Sub-Taluk	Melkote	Sunka Tannur	Chenna, Chikkamarasa and 5 others ..	283	Dry ...	5 8	4 0 0	1 0	Sunka Tannur tank and Survey No. 282.	Survey No. 284 ...	S. No. 278 ...	Bed of Sunka Tannur tank.	
				Betty, Rama	284	Do ...	4 24	3 8 0	0 20	S. No. 283 ...	S. No. 285 ...	S. No. 278 ...	Do	
				Government waste land ...	2 5	Waste ...	1 22	...	0 12	S. No. 281	S. Nos. 286 and 287 ..	S. No. 272 ...	Do	
				Betty Rama	282	Dry ...	1 33	1 4 0	0 32	S. No. 279 ...	S. No. 283 ...	S. No. 278 ...	Do and S. No. 281.	
				Kala, Chikka, Dolla	288	Do ...	6 16	5 0 0	1 0	Bed of tank ...	S. No. 289 ...	S. Nos. 287 and 287	S. Nos. 289 and 290.	
				Kempa, Devari, Putheri and Kalegowda..	289	Do ...	3 30	3 8 0	1 20	Do ..	S. No. 290 ...	S. No. 288 ...	Bed of tank.	
				Kalegowda *alias* Kempaygowda ...	290	Do ...	5 10	4 8 0	0 28	S. No. 289 and tank ..	S. Nos. 291, 268 and 293.	S. Nos. 269 and 288 ...	Do	
				Thimma *alias* Thimarayee ...	293	Do ..	5 8	4 0 0	1 20	S. No. 290 ...	Kharab Halla ..	S. Nos. 291 and 292 ..	Do and S. No. 294.	
				Bora *alias* Chikkacharee ...	294	Do ...	0 37	0 12 0	0 37	Bed of tank ...	Do ...	S. No. 293 ...	Bed of tank.	
				Kulla	257	Do ...	2 31	2 8 0	1 0	Kharab Halla	S. Nos. 258 and 259 ...	S. No. 261 ...	S. Nos. 255, 256 and 295.	
				Kala Thimma, husband of Channee ...	256	Garden ..	0 15	1 0 0	0 15	S. No. 257 ...	S. Nos. 255 and 257 ...	S. No. 257 ...	S. No. 255.	
				Kempegowda	255	Do ...	0 37	3 0 0	0 32	S. Nos. 295, 256 and 257.	S. No. 253 .	S. Nos. 257 and 256 ..	S. Nos. 254 and 300.	
				Rama, Chikka, Narasimha	253	Do ...	0 19	1 5 0	0 19	S. No. 255 ...	S. No. 253 ...	S. No. 255 ...	S. No. 301.	
				Kala, Deva and others	253	Do ...	0 7	0 8 0	0 16	S. Nos. 254 and 255 ..	Koduguhalli out-post ..	S. No. 258	S. Nos. 252 and 247.	
						Dry ...	8 37	8 0 0						
				Kulla	259	Do ...	6 37	6 0 0	0 12	S. Nos. 261 and 257 ...	S. No. 260 ..	S. No. 261 ...	S. No. 258.	
				Thimmagowda	251	Garden ...	0 23	2 0 0	0 12	S. No. 301 ...	S. No. 252 ...	S. No. 252 ...	S. Nos. 250 and 304.	
				Devegowda	303	Do ...	0 9	0 8 0	0 6	S. No. 306 ...	S. No. 304 ...	S. No. 301 ...	S. No. 306.	
				Do	248	Do ...	0 13	1 0 0	0 4	S. No. 249 ..	S. No. 247 ...	S. No. 247 ...	S. No. 246.	

...sites to be given to them in exchange for theirs.

Mysore	French Rocks Sub-Taluk	Melkote	Sunka Tannur	Thimma and others	247	Dry ..	3 25	3 0 0	0 4	S. Nos. 248, 246 and 250.	Kodagihalli out-post	S. Nos. 253 and 252 ...	S. No. 246, 248 and 249.	These are willing to remove their sheds and build on other
				Devagowda, Kala	249	Do ...	0 10	0 12 0	0 10	S. No. 250 ...	S. Nos. 248 and 246 ...	S. No. 247 ...	S. No. 246.	
				Gowdagowda	250	Do ...	0 32	2 4 0	0 32	S. Nos. 304 and 305 ...	S. Nos. 247 and 249 ...	S. No. 251 ...	S. Nos. 246 and 305.	
				Do	246	Do ...	7 34	7 0 0	1 20	S. No. 309 ...	Kodagihalli out-post ...	S. Nos. 247, 248 and 249.	S. Nos. 313, 245.	
				Do Thimmarayee and Kempa ...	305	Garden	0 21	1 8 0	0 21	S. Nos 306 and 308	S. Nos. 350 and 246 ..	S. No. 304 ...	S. No. 309.	
				Gowdagowda	309	Dry ..	3 1	3 8 0	3 1	S. Nos. 308, 301 and bed of tank.	S. No. 246 .	S. Nos. 307, 308 and 305.	S. Nos. 310 and 313.	
				Seshamma	313	Do ...	2 8	2 8 0	1 0	S. Nos. 311 and 310 ...	S. No. 245 ...	S. Nos. 246 and 309 ..	S. Nos. 318, 314 and 315.	
				Gowdagowda	311	Do ...	0 10	0 4 0	0 8	S. No 310 .	S. No. 313 ...	S. No. 310 ..	S. No. 312.	
				Seshamma	310	Do ...	1 15	1 8 0	1 0	Bed of tank .	S. Nos. 309 and 313 ...	S No. 309 ..	S. No. 311 and tank bed.	
				Betty Rama	307	Do ..	1 12	1 8 0	1 12	Do ...	S. No. 308 ...	S. No. 306 ...	S. No. 309 and tank bed.	
				Venkatasetty	306	Garden Dry ...	0 4 1 17	0 4 0 1 8 0	0 4	Do ..	S. No. 305 ...	S. Nos. 298, 301 and 302.	S. Nos. 308 and 307.	
				Sarcar (Government)	331	Kharab ...	0 8	...	0 4	S. No. 332 ...	S No. 330 ...	Tank ...	S. No. 330.	
				Betty Rama, Kulla	332	Dry ...	4 2	3 8 0	1 30	S. Nos. 334 and 333 ...	S. Nos. 330 and 331 ..	Do ...	Village and village site.	
				Bommanagwoda	333	Do ...	0 23	0 8 0	0 12	Village ...	S. No. 332 ...	S. No. 334 ...	Village.	
				Masty Kulla, Veera and others ...	334	Do ..	1 39	1 12 0	1 0	Tank .	S. No. 332 ...	Tank ...	S. No. 333 and village.	
				Kallagowda	295	Do ...	0 21	0 8 0	0 21	Halla ...	S. No. 255 .	S. No 257 ...	S. Nos. 269 and 299.	
				Devegowda	296	Garden ...	0 20	1 0 0	0 20	Tank of Halla ..	S. No. 297 ...	S. No. 295 ...	S. No. 297.	
				Kulla	297	Do ...	0 39	2 0 0	0 39	Tank ...	S. Nos. 298 and 299 ..	S. No. 296 ...	Tank.	
				Thimmegowda	298	Do ...	0 19	1 0 0	0 19	S. No. 297 ..	S. No 301	S. Nos. 299 and 300 ...	Do and S. No. 306.	
				Karya Lakshma	299	Do ...	0 15	0 2 0	0 15	S. Nos. 296 and 297 ...	S. No. 300 ...	S. No. 295 ...	S. No. 298.	
				Kalegowda	300	Do ...	0 18	1 4 0	0 18	S. No. 299 ...	S. No. 302 ...	S. No. 255 ..	S. No. 301.	
				Kempa Davare and Patture ...	301	Do ..	0 13	1 0 0	0 13	S. No. 298 ..	S. No. 302 .	S. No. 300 ...	S. No. 306.	
				Linga, Kulla and others	302	Do ..	0 26	2 4 0	0 26	S. Nos 300 and 301 .	S. Nos. 251 and 252 ...	S. No. 254 .	S. No. 303.	
				Kalla and others	304	Do ...	0 11	0 12 0	0 11	S. No. 303 ..	S. No. 250 ...	S. No. 251 ...	S. No. 305.	
				Betty Ramma	308	Do ...	0 22	1 4 0	0 22	S. No. 307 ...	S. Nos. 300 and 305 ...	S. No. 306 ...	S. No. 309.	
				Kallegowda and Earaygowda and others.		Building sites				Bed of tank ...	Village ...	S. No. 334 ...	S. No. 115	

No. R. 15364—*L. R.* 678-05-3, *dated* 30*th May* 1906.

In pursuance of the scheme laid down in Government Order No. Fl. 2167—73, dated the 13th February 1904, for the improvement of the Shekdari Service in the State, the Government of His Highness the Maharaja are pleased to direct that a new hobli called the Hessarghatta Hobli be constituted as follows and added to the Bangalore Taluk :—

From Nelamangala Taluk.

1. Soldevanahalli
2. Kempapura
3. Kasagattapura
4. Mattukur
5. Hessarghatta
6. Hurlichikkanahalli
7. Gudadahalli
8. Dasenahalli
9. Tarabanahalli
10. Kumbarahalli
11. Bilajaji
12. Kodgi Tirumalapura
13. Tammaraganahalli
14. Moddagirihalli
15. Sasaveghatta
16. Guniana Agrahara (Kayamgutta)
17. Byalakere do
18. Lingarajasagara (Jodi)
19. Kalatammanahalli (Sarvamanya)
20. Ivarkhandapura (Jodi)

Dodballapur Taluk.

21. Channasandra
22. Kakolu
23. Shyanabhoganahalli
24. Seethakempanahalli
25. Dibbur
26. Madappanahalli
27. Mylappanahalli
28. Kondasettihalli
29. Sikote
30. Mutkadahalli
31. Linganahalli
32. Byata
33. Lingarajapura (Kayamgutta)
34. Mavalipura (Jodi)
35. Kalayanahalli (Kayamgutta)
36. Kalavaravanahalli (Jodi)
37. Krishnarajapura do
38. Byrapura
39. Budamanahalli
40. Chokkanahalli
41. Arekere
42. Kakkehalli
43. Addeviswanathapura
44. Rajanukunte (Jodi)
45. Ittagalapura do
46. Karnakshipura do
47. Seresandra
48. Sonnenahalli
49. Haniyur

Devanhalli Taluk.

50. Nellukunte
51. Kadathanamale
52. Sriramanahalli
53. Sadenahalli
54. Addiganahalli
55. Marasandra Amanikere
56. Suradhenupura

No. R. 15375—*L. R.* 31-05-7, *dated* 30*th May* 1906.

The Government of His Highness the Maharaja of Mysore are pleased to direct that the following be substituted for the first sentence of Rule 55 of the Rules issued under the Land Revenue Code, Regulation IV of 1888 :—

"When unoccupied land is required, a written application should be made in person or by duly constituted agent or by post to the Amildar direct, provided that in the last mentioned case, the applicant's full name and address are legibly written and his signature is attested to by the village shanbhog or a taluk official not inferior in rank to a shekdar, or a Magistrate, certifying to the identity of the applicant."

No. R. 15553—*R. M.* 611-05-2, *dated* 6*th June* 1906.

Under Section 6 of the Land Acquisition Regulation, No. VII of 1894, it is hereby declared that the land described hereunder is required for a public purpose, *viz.*, for extending the village site; and under Sections 7 and 3 (*c*) of the said Regulation, the Assistant Commissioner in charge of the Tarikere group of taluks is authorized to take order for the acquisition of the said land :—

District—Kadur.
Taluk—Tarikere.
Hobli—Amrutapura.
Village—Lakshmisagara.
Name of khatedar—Marulaiya *bin* Rudraiya.
Survey No.—4.
Dry, wet or garden—Dry.
Total extent—13 acres and 19 guntas.
Assessment—Rs. 18.
Extent now required—39 guntas.
Boundaries—
East—Cattle track in Survey No.
West—Survey No. 23.
North—Village site already acquired out of Survey No. 4.
South— Do No. 5.

No. R. 15365—*L. R.* 678-05-4, *dated* 30*th May* 1906.

BANGALORE DISTRICT.

In supersession of Government Notification No. R. 8946—L. R. 254-04-16, dated the 23rd March 1905, directing the reconstitution of Hoblis in the Bangalore District, the Government of His Highness the Maharaja of Mysore are pleased to direct that the Hoblis be reconstituted as follows :—

Taluk	Hobli	Number	Village
Bangalore	Vartur	1	Vartur
		2	Valepura
		3	Kanekandaya
		4	Amani Bellandurukane
		5	Sorahunasi
		6	Kachamaranahalli
		7	Toobarahalli
		8	Baligere
		9	Ramagondahalli
		10	Siddapura
		11	Gunjuru
		12	Kadabisanahalli
		13	Panathur
		14	Mullur
		15	Sulikunte
		16	Kodathi
		17	Dodda Kannelli
		18	Chikka Kannelli
		19	Devarabisanahalli
		20	Chikkanayakanahalli
		21	Halnayakanahalli
		22	Kaikondahalli
		23	Kasavanahalli
		24	Chikbelandur
		25	Munnekolala
		26	Marathahalli
		27	Halasur Kaval
		28	Bellandur
		29	Yamlur
		30	Belur
		31	Kempapura
		32	Challaghatta
		33	Belur Nagasandra
		34	Konenagrahara
			Inam Villages
		35	Haralur (Jodi)
		36	Kariyamanagrahara (Jodi)
		37	Siddapura (Jodi)
		38	Bhodanahalli (Kayamgutta)
		39	Junsandra do
		40	Kodihalli do
		41	Amblipura do
	Krishnarajapura	1	Krishnarajapura
		2	Kyalasanahalli
		3	Sonnathammanahalli
		4	Nagareswara Naganahalli
		5	Kotnur
		6	Kanisandra
		7	Rachenahalli
		8	Dasarahalli
		9	Bhairathikane
		10	Hormavu
		11	Kodigehalli
		12	Basavanpura
		13	Dyavasandra
		14	Sigehalli
		15	Sadaramangala
		16	Nallurahalli
		17	Hudi
		18	Geddalahalli
		19	Nagondahalli
		20	Hagadur
		21	Dodnekkundi
		22	Benniganahalli
		23	Bannamangala Manavarthi Kaval
		24	Hormavagara
		25	Vibhuthipura
		26	Thippasandra Manavarthi Kaval
		27	Baiyapanahalli Manavarthi Kaval
			Inam Villages
		28	Kalkere (Jodi)
		29	Chansandra (Jodi)
		30	Pattanduru do
		31	Chelakere do
		32	Chinnappanahalli (Kayamgutta)
		33	Kandalhalli do
		34	Kavudenahalli do
		35	Mahadevapura do
		36	Sonnappanahalli do
		37	Byatarayanapura do
		38	Kotnur Narayanapura do
		39	Ramagondahalli Narayanapura (Kayamgutta)
		40	Kaggadasa (Kayamgutta)
		41	Thippasandra do
		42	Banaswadi do
		43	Bairasandra do
		44	Viginapura do
		45	Sreenivasapura do
		46	Baiyappanahalli do
	Yelahanka	1	Yelahanka
		2	Yelahanka Amanikere
		3	Allalsandra
		4	Chikkabommasandra
		5	Harohalli
		6	Virasagara
		7	Attur

Reconstitution of Hoblis in the Bangalore District—*contd.*

Taluk	Hobli	Number	Village
Bangalore	Yelahanka	8	Ramagondahalli
		9	Kempanahalli
		10	Muddanahalli
		11	Singanaikanahalli Amanikere
		12	Nagadasanahalli
		13	Gantaganahalli
		14	Doddabettahalli
		15	Kogilu
		16	Jakkur
		17	Agrahara
		18	Gasthi Kempanahalli
		19	Sampigehalli
		20	Vangatala
		21	Manchahalli
		22	Kenchanahalli
		23	Vaderapura
		24	Chikkabettahalli
		25	Doddabommasandra
		26	Thindlu
		27	Sivanahalli
		28	Avalahalli
		29	Puttanahalli
		30	Singanaikanahalli
		31	Kodigehalli
		32	Kempapura
		33	Jarakabande Kaval
		34	Jakkur Plantation
			Inam villages
		35	Mediagrahara (Sarvamanya)
		36	Bellahalli do
		37	Thiruvanahalli do
		38	Singapura (Jodi)
		39	Mundlakunte do
		40	Ananthapura (Kayamgutta)
		41	Kottihosahalli do
		42	Govindapura do
		43	Narasimhapura do
		44	Byatarayanapura do
		45	Ramachendrapura do
		46	Lakshmisagara do
		47	Vasudevapura do
		48	Vaderahalli do
		49	Syamarajapura do
		50	Honnenahalli do
		51	Krishnasagar do
		52	Sreenivasapura do
		53	Venkatesapura do
		54	Sriramapura do
		55	Chokkanahalli do
		56	Amrithahalli do
Bangalore	Yeswanthapura	1	Yeswanthapura
		2	Laggere
		3	Srigandha Kaval
		4	Sajjepalya
		5	Sivanahalli
		6	Saneguruvanahalli
		7	Chikkabanavar
		8	Chiksandra
		9	Sidedahalli
		10	Jalahalli
		11	Myakalachinnenahalli
		12	Kannuranahalli
		13	Dasarahalli
		14	Choksandra
		15	Somasettihalli
		16	Ganigarahalli
		17	Abbigere
		18	Nagasandra
		19	Guddadahalli
		20	Karivabanahalli
		21	Peenya
		22	Nagarabhavi
		23	Malagalu
		24	Gidada Konenahalli
		25	Kodigehalli
		26	Hosahalli Gollarpalya
		27	Mallathalli
		28	Kannelli
		29	Herohalli
		30	Kethmarnahalli
			Inam villages
		31	Kamagondanahalli (Jodi)
		32	Tirumalapura do
		33	Malsandra do
		34	Settihalli do
		35	Manganahalli do
		36	Gangondahalli do
		37	Agrahar Dasahalli (Kayamgutta)
		38	Hegganahalli (Kayamgutta)
		39	Nallakadarenahalli (Kayamgutta)
		40	Doddabidarakallu (Kayamgutta)
		41	Bagalagunte do
		42	Lakshmipura do
		43	Handrahalli do
		44	Myadarahalli do
		45	Shigehalli do
		46	Hullalu do
		47	Lingadhiranahalli do
Bangalore	Bangalore	1	Dodbailkhane
		2	Sampigehalli
		3	Hanumanthapura
		4	Gangammanagudipalya
		5	Guttahalli
		6	Agrahar Thimmasandra
		7	Barige Muddenahalli
		8	Malenahalli
		9	Gangenahalli
		10	Jaksandra
		11	Matadahalli
		12	Vaiyali Kaval
		13	Karanii Bisanahalli

633

Reconstitution of Hoblis in the Bangalore District—*contd.*

Taluk	Hobli	Number	Village
Bangalore	Bangalore	14	Bhogenahalli
		15	Mavalli
		16	Upparahalli
		17	Viswanatha Naganahalli
		18	Nagawara
		19	Hennur
		20	Kaval Bairasandra
		21	Geddalahalli
		22	Dyavasandra
		23	Nagasettihalli
		24	Chikkamaranahalli
		25	Lotte Gollahalli
		26	Cholanaikanahalli
		27	Hebbal Amanikere
		28	Hebbala
		29	Guddadahalli
		30	Siddapura
		31	Gavipura
		32	Sunkenahalli
		33	Gerahalli
		34	Karitimmanahalli
		35	Byatarayanapura
		36	Kempambudhikere
		37	Annipura
		38	Arekempanahalli
		39	Upparahalli
		40	Byadarahalli
			Inam villages
		41	Kempapura (Jodi)
		42	Bhupasandra (Sarvamanya)
		43	Devarajeebanahalli (Kayamgutta)
		44	Ranganathapura (Kayamgutta)
		45	Purnapura (Kayamgutta)
		46	Jedihalli do
		47	Kacharkalli do
		48	Byathaguntepalya (Kayamgutta)
		49	Mattigere (Kayamgutta)
		50	Lingarajapura (Kayamgutta)
		51	Sampura do
		52	Kalagondahalli do
	Kengeri	1	Kengeri
		2	Valagerehalli
		3	Devagere
		4	Patnagere
		5	Lingadhiranahalli
		6	Sonnenahalli
		7	Varahasandra
		8	Dodbele
		9	Sompura
		10	Mylasandra
		11	Badamanavartha Kaval
		12	Hampapura
		13	Kumbalagudu
		14	Krishnarajapura
		15	Nayandahalli
		16	Kenchenahalli
		17	Rachanamadu
		18	Ganakallu
		19	Nagadevanhalli
		20	Ramasandra
		21	Kengeri Gollahalli
		22	Agara
		23	Hemmigepura
		24	Chundenapura
		25	Gangasandra
		26	Gonipura
		27	Gudimavu
		28	Tagachakuppe
		29	Tippur
		30	Sigehalli
		31	Kumbalagodu Gollahalli
		32	Chinnakurchi
		33	Ramohalli
		34	Chellaghatta
		35	Maragondahalli
		36	Kommaghatta
		37	Sulikere
		38	Bhimanakuppe Ramasagara
			Inam villages
		39	Deevati Ramanahalli (Sarvamanya)
		40	Halige Vaderahalli (Jodi)
		41	Bhimanakuppe (Jodi)
		42	Kenchanapura (Kayamgutta)
		43	Kanuminike do
		44	Vasanthahalli do
		45	Boimaranahalli do
		46	Venkatapura do
		47	Kambipura do
		48	Malagondahalli do
		49	Krishnasagara do
		50	Maragondahalli Krishnasagara (Kayamgutta)
		51	Thanadi Annipura or Pantharapalya
	Uttarahalli	1	Uttarahalli
		2	Hoskerehalli
		3	Bikasipura
		4	Doddakallasandra
		5	Konankunte
		6	Kottanur
		7	Marasandra
		8	Vaddarapalya
		9	Raghavanahalli
		10	Yelachenahalli
		11	Arahalli
		12	Kurahalli
		13	Ittamadu
		14	Channasandra
		15	Talgattapura
		16	Hoshalli
		17	Gublalu

Reconstitution of Hoblis in the Bangalore District—*contd.*

Taluk	Hobli	Number	Village
Bangalore	Uttarahalli	18	Malsandra
		19	Uttarahalli Manavarthe Kaval
		20	Thippasandra
		21	Holenakere
		22	Gollahalli
		23	Puttenahalli
		24	Bairasandra
		25	Karisandra
		26	Jaraganahalli
		27	Marenahalli
		28	Yediyur
		29	Thayappanahalli
		30	Dasarahalli
		31	Sarakki
		32	Sarakkikere
		33	Avalhalli
		34	Yediyur Nagasandra
		35	Gottigere
		36	Pilganahalli
			Inam villages
		37	Raghavanapalya (Sarvamanya)
		38	Avalahalli (Jodi)
		39	Kembathahalli (Jodi)
		40	Vasanthapura do
		41	Gopinaikanahalli do
		42	Chunchaghatta (Kayamgutta)
		43	Vajarahalli do
		44	Chik Kalsandra do
		45	Kathreguppe do
		46	Kadarenahalli do
	Begur	1	Begur
		2	Vitsandra
		3	Yalenahalli
		4	Yallukunte
		5	Mailsandra
		6	Bettadasanapura
		7	Bilakhalli
		8	Devarachikkanahalli
		9	Kodichikkanahalli
		10	Nyanappanahalli
		11	Basavanpura
		12	Hulimavu
		13	Haralukunte
		14	Hongasandra
		15	Dod Togur
		16	Chikka Togur
		17	Parappana Agrahar
		18	Beratenagrahar
		19	Shingasandra
		20	Konappanagrahar
		21	Dodnagamangala
		22	Agara
		23	Jaksandra
		24	Laksandra
		25	Madivala
		26	Rupenagrahara
		27	Venkojiraokane
		28	Tavarekere
		29	Sarakki Agrahar
	Begur	30	Hadgodi
		31	Bommanahalli
		32	Ijipura
		33	Shinavagal
		34	Shinavagalkere
		35	Ibbalur
			Inam villages.
		36	Tammanahalli (Jodi)
		37	Basapura (Kayamgutta)
		38	Arakere do
		39	Kalena Agrahar do
		40	Hommadevanahalli do
		41	Nynappasettipalya do
		42	Nagnathapura do
		43	Chendrasekharapura do
		44	Koramangala do
	Bangalore	1	Soldevanahalli
		2	Kemapura
		3	Kasagattapura
		4	Mattukur
		5	Hessaraghatta
		6	Hurli Chikkanahalli
		7	Gudadahalli
		8	Dasenahalli
		9	Tarabanahalli
		10	Kumbarahalli
		11	Bilajaji
		12	Kodagi Thirumalapura
		13	Thammarasanahalli
		14	Madigarahalli
		15	Sasaveghatta
		16	Channasandra
		17	Kakolu
		18	Shyanbhoganahalli
		19	Seethakempanahalli
		20	Dibbur
	Hessaraghatta	21	Madappanahalli
		22	Mylappanahalli
		23	Kondasettihalli
		24	Sikote
		25	Mutkadahalli
		26	Linganahalli
		27	Byata
		28	Nellukunte
		29	Kadathanamale
		30	Sriramanahalli
		31	Sadenahalli
		32	Addiganahalli
		33	Marasandra Amanikere
		34	Byrapura
		35	Budamanahalli
		36	Chokkanahalli
		37	Arekere
		38	Kakkehalli
		39	Addeviswanathapura
		40	Sirasandra
		41	Sonnenahalli
		42	Challahalli
		43	Haniyuru

Reconstitution of Hoblis in the Bangalore District—*contd.*

Taluk	Hobli	Number	Village
Bangalore	Hessaraghatta		*Inam villages.*
		44	Guniagrahara (Kayamgutta)
		45	Byalakere (Kayamgutta)
		46	Lingarajasagara (Jodi)
		47	Kalthammanahalli (Sarvamanya)
		48	Ivarakandapura (Jodi)
		49	Mavalipura (Jodi)
		50	Kolavarayanahalli (Jodi)
		51	Krishnarajapura (Jodi)
		52	Suradhenupura (Jodi)
		53	Rajankunte (Jodi)
		54	Ittagalapura (Jodi)
		55	Kamakshipura (Jodi)
		56	Lingarajapura (Kayamgutta)
		57	Kolevahalli
			Total number of villages in the Bangalore Taluk— Government villages... 317; Inam do ... 123; Total... 440
Hoskote	Hoskote	1	Kallahalli
		2	Sankanipura
		3	Alappanahalli
		4	Somapura
		5	Yelachanaikanapura
		6	Opparahalli
		7	Sonnadevanahalli
		8	Kumbalahalli
		9	Amani Chikkere
		10	Hoskote
		11	Dandupalya
		12	Hullur Amanikere
		13	Amani Doddakere
		14	Kannurhalli
		15	Pethnahalli
		16	Ganigala
		17	Malimakanapura
		18	Chik Nallurahalli
		19	Chokkahalli
		20	Chikka Hulluru
		21	Hullur
		22	Halasahalli
		23	Bhaktharahalli
		24	Pujena Agrahara
		25	Dodda Gathiganabbe
		26	Chikka Gathiganabbe
		27	Nadavathi
		28	Mallasandra
		29	Koralur
		30	Kolathur
		31	Guttahalli
			Inam villages.
		32	Lakkondahalli (Jodi)
		33	Vabasandra do
		34	Cheemandahalli do
		35	Kurubarahalli (Sarvamanya)
		36	Varadapura (Kayamgutta)
		37	Dasarathimmanahalli do
Hoskote	Hoskote	38	Cholappanahalli (Jodi)
		39	Dasarahalli do
		40	Pillagunji do
		41	Appajipura do
	Bidarahalli	1	Doddenahalli
		2	Kanur
		3	Chiksandra
		4	Yerrappanahalli
		5	Gundur
		6	Kammasandra
		7	Bypanahalli
		8	Gubbi
		9	Byrati
		10	Bilesivale
		11	Vaderahalli
		12	Rampura
		13	Aduru
		14	Bidarahalli
		15	Huvina Ane
		16	Irandahalli
		17	Kithaganur
		18	Halehalli
		19	Medihalli
		20	Tirumenahalli
		21	Jothipura
		22	Kattugollahalli
		23	Hancherahalli
		24	Kodagihalli
		25	Mundur
		26	Bommenahalli
		27	Nimmakayipura
		28	Chimasandra
		29	Katam Nallur
		30	Konasandra
		31	Goravigere
		32	Kaji Sonnenahalli
		33	Avalahalli
		34	Doddabanahalli
		35	Kannamangala
		36	Sigihalli
		37	Belatur
		38	Kadagudi
		39	Channasandra
			Inam villages.
		40	Mattiganhalli (Jodi)
		41	Kadsonnappanahalli (Jodi)
		42	Nadugowda Gollahalli do
		43	Chik Gubbi do
		44	Kada Agrahara do
		45	Bommasandra do
		46	Anugalpura do
		47	Maragondhalli do
		48	Varanasi do
		49	Bhattarahalli (Kayamgutta)
		50	Sringarpura (Jodi)
		51	Vanajenahalli do
		52	Raghuvanahalli do
		53	Lagumenahalli do
		54	Bendiganahalli do
		55	Huskur do
		56	Bandarapura do

Reconstitution of Hoblis in the Bangalore District—*contd.*

Taluk	Hobli	Number	Village
Hoskote	Sulabele	57	Bidare Agrahara (Jodi)
		58	Virenahalli do
		59	Chik Banahalli do
		60	Kumbena Agrahara
		61	Kuruda Sonnenahalli
		1	Rallakunte
		2	Hosahalli
		3	Istur
		4	Isturkere
		5	Teniur
		6	Timmappanahalli
		7	Chik Kurubarahalli
		8	Sivapura
		9	Mattabarlu
		10	Iyyamanahalli
		11	Bindiganhalli
		12	Haniyur
		13	Anupahalli
		14	Chimasandra
		15	Dimbahalli
		16	Balenahalli
		17	Aukonahalli
		18	Battiganahalli
		19	Kasipura Kambadabidu
		20	Ramapura
		21	Sulibele
		22	Tammarasanahalli
		23	Sesimakanahalli
		24	Dod Araligere
		25	Bettahalli
		26	Bhavapura
		27	Buvvanahalli
		28	Hosadimbahalli
		29	Valagerepura
		30	Attibele
		31	Gidappanahalli
		32	Kodipura
		33	Venkatapura
		34	Nallanaganahalli
		35	Chavadasandra
		36	Aralgerekere
		37	Gullahalli
		38	Munianahosahalli
		39	Sadappanahalli
		40	Nagarenahalli
		41	Sattya Vara
		42	Karepranahalli
		43	Doddakogile
		44	Yennigunte
		45	Chikkogilu
		46	Bagalur
		47	Muttukadahalli
		48	Muttasandra
		49	Sonnebychanahalli
		50	Kammasandra
		51	Sattyavara
		52	Beguru
		53	Bhimakkanahalli
		54	Hasigalu
		55	Sonnahallipura
		56	Timmasandra
Hoskote	Sulabele	57	Settihalli
			Inam villages.
		58	Dyavasandra (Jodi)
		59	Srinivasapura do
		60	Arasanahalli do
		61	Santanpura (Kayamgutta)
		62	Kadaranapura do
		63	Siddenahalli (Jodi)
		64	Tammarayasandra Agrahara (Jodi)
		65	Pulamanchi (Jodi)
		66	Vanamanahalli do
		67	Yettinavaderapura (Kayamgutta
		68	Gundrahalli (Jodi)
		69	Yekarajapura (Kayamgutta)
		70	Kambalipura do
		71	Kykatti Kempapura (Jodi)
		72	Chikka Araligere do
		73	Sinadevanahalli do
Hoskote	Nandagudi	1	Chikkondahalli
		2	Tarabahalli
		3	Yettina Vaderapura
		4	Arehalli
		5	Nelavagalu
		6	Hosaharadi
		7	Hindiganal
		8	Sarakanur
		9	Banahalli
		10	Settihalli
		11	Sonnekempanahalli
		12	Sarakur Vaddahalli
		13	Nandagudi
		14	Giddanahalli
		15	Timmasandra
		16	Korati
		17	Hosahalli
		18	Chokkasandra
		19	Kondarahalli
		20	Dodaganahalli
		21	Bylu Narasapura
		22	Hedakanhalli
		23	Mothakadahalli
		24	Obalahalli
		25	Sattigenahalli
		26	Gullenahalli
		27	Hulavanahalli
		28	Bandahalli
		29	Birahalli
		30	Hettakki
		31	Marasandahalli
		32	Goddaramanahalli
		33	Bisanahalli
		34	Doddanahalli
		35	Maliappanahalli
		36	Goravihalli
		37	Banamakanahalli
		38	Gangapura
		39	Tavarekere
		40	Venkatapura

Reconstitution of Hoblis in the Bangalore District—*contd.*

Taluk	Hobli	Number	Village
		41	Manchappanahalli
		42	Yelachehalli
		43	Kalappanahalli
		44	Chikkanahalli
		45	Kembaliganahalli
			Inam villages.
		46	Hosa Venkatapura (Jodi)
		47	Dalasigere (Jodi)
		48	Ittasandra (Kayamgutta)
		49	Geddalahallipura (Jodi)
		50	Yesavantapura (Kayamgutta)
		51	Siddanahalli (Jodi)
	Nandagudi	52	Karahalli (Kayamgutta)
		53	Vaddahalli (Jodi)
		54	Ramagovindapura (Jodi)
		55	Medur (Jodi)
		56	Muddenahalli (Jodi)
		57	Gundrahalli do
		58	Sivanapura (Kayamgutta)
		59	Ankonahalli (Jodi)
		60	Siddapura do
		61	Bhimapura (Kayamgutta)
		62	Agasarahalli (Jodi)
		63	Lingapura (Kayamgutta)
		64	Kolal Channenahalli (Kayamgutta)
		65	Guddada Channenahalli (Kayamgutta)
		66	Chinnathammanagollahalli (Jodi)
		67	Gerahalli (Kayamgutta)
Hoskote		1	Timmapura
		2	Tarabahalli
		3	Ummalu
		4	Yelachamanahalli
		5	Appasandra
		6	Doddadenahalli
		7	Injanahalli
		8	Algondahalli
		9	Orohalli
		10	Chikkaggali
		11	Jadigenahalli
		12	Belamangala
		13	Gonakanahalli
		14	Tirtahalli
		15	Aralemakanahalli
	Jadigenahalli	16	Chandrapura
		17	Kodihalli
		18	Vagata
		19	Makanahalli
		20	Dodadasarahalli
		21	Govindapura
		22	Vadigenahalli
		23	Maragondahalli
		24	Kattigenahalli
		25	Honachanahalli
		26	Kamarasanahalli
		27	Bommanabande
		28	Kaji Hosahalli
		29	Tinnalu
		30	Bisanahalli
		31	Devaragollahalli
		32	Haralur
		33	Solur
		34	Matanahalli
		35	Thavatahalli
		36	Dodanallala
		37	Athivatta
		38	Nidaghatta
		39	Dabbagunte
		40	Chikka Nallala
		41	Halasakaipura
		42	Yeerapura
		43	Gottipura
		44	Mugavala
		45	Chinnandahalli
		46	Doda Nallurhalli
		47	Pujar Ramanahalli
		48	Athur
		49	Mugaval Hosahalli
		50	Jinnagara
			Inam villages.
		51	Kari Beranahosahalli (Jodi)
		52	Vijayapur (Jodi)
		53	Devasettihalli (Jodi)
		54	Vagata Agrahara (Jodi)
		55	Hunasehalli do
		56	Kacharkanahalli do
		57	Paramanahalli do
		58	Kanekallu do
		59	Kurubara Gollahalli (Jodi)
		60	Bhakatagondahalli (Sarvamanya)
		61	Dodakaggali (Kayamgutta)
		62	Banahalli (Jodi)
		63	Thaggali Hosahalli (Jodi)
		64	Ambalipura do
		65	Gaguthahalli do
		66	Mylapura do
		67	Chennapura do
		68	Valagerepura do
		69	Nakkanahalli do
	Anugondahalli	1	Obalapura
		2	Anugondahalli
		3	Devanagundi Hosahalli
		4	Handenahalli
		5	Banarahalli
		6	Samalapura
		7	Lingadheera Mallasandra
		8	Devanagundi
		9	Byranahalli
		10	Devalapura
		11	Doddadunnasandra
		12	Bhodana Hosahalli
		13	Samethanahalli
		14	Tirumalasettihalli
		15	Hemmandahalli
		16	Naganayakanakote
		17	Harohalli

Reconstitution of Hoblis in the Bangalore District—*contd.*

Taluk	Hobli	Number	Village
Hoskote	Anugondahalli	18	Muttasandra
		19	Bellikere
		20	Janthagondahalli
		21	Yadagondahalli
		22	Medimallasandra
		23	Arehalli
		24	Chikkanahalli Kammanahalli
		25	Ganagalur
		26	Mangalur
		27	Panditha Agrahara
		28	Maranagere
		29	Gundur
		30	Sivanapura
		31	Mottanahalli
		32	Gudikattanahalli
		33	Nagena Agrahara
		34	Tattanur
		35	Desapande Guttihalli
		36	Chikkanekkundi
			Inam villages.
		37	Medihalli (Jodi)
		38	Muthakur do
		39	Ajjagondahalli do
		40	Kotur do
		41	Gulakaipura do
		42	Kalkunte Agrahara do
		43	Bylahalli do
		44	Muthakadahalli do
		45	Seegenaikanahalli do
		46	Madappanahalli do
		47	Nekkundi Dommasandra (Jodi)
		48	Halasahalli Tippasandra do
		49	Heggundahalli (Jodi)
		50	Kugur do
		51	Tiruvaranga do
		52	Banahalli do
		53	Bagur do
		54	Siddanapura (Kayamgutta)
		55	Naranakere (Sarvamanya)
		56	Basabathanahalli (Kayamgutta)
		57	Thimmandahalli (Jodi)
			Total number of villages in the Hoskote Taluk— Government villages... 258; Inam villages ... 110; Total ... 368
Anekal	Anekal	1	Anekal
		2	Medihalli
		3	Agasatimmanahalli
		4	Chikkanahalli
		5	Chikkahosahalli
		6	Tammanayakanahalli
		7	Indlavadipura
		8	Indlavadi
		9	Thimmasandra
		10	Suraganachikkanahalli
		11	Hasaruvani
		12	Kumbaranahalli
		13	Soppuhalli
		14	Solur
		15	Lingapur
		16	Byagadadenahalli
		17	Koonamadivala
		18	Doddahagade
		19	Avadadenahalli
		20	Tattanahalli
		21	Aravattigepura
		22	Chikkahagade
		23	Karpoora
		24	Bestamanahalli
		25	Rachamanahalli
		26	Channena Agrahara
		27	Samandoor
		28	Subbamangala
		29	Geratiganabele
		30	Chikkannanahatti
		31	Menasiganahalli
		32	Vanakanahalli
		33	Kalanaikanahalli
		34	Singasandra
		35	Telagarahalli
		36	Bidarakadahalli
		37	Patnagere Gollahalli
		38	Sunnavara
		39	Chudenahalli
		40	Kavalahosahalli
		41	Honnakalasapura
		42	Hompaligatta
		43	Muttagatta
		44	Gaurenahalli
		45	Kurubarahatti
		46	Bidaregere
		47	Aldenahalli
		48	Kempa Vaderahalli
		49	Amani Doddakere
		50	Siddihoskote
			Inam villages.
		51	Kamasandra Agrahara (Jodi)
		52	Maranayakanahalli do
		53	Gudlahalli do
		54	Baggandoddi do
		55	Sonnanaikanapura (Kayamgutta)
		56	Adur (Kayamgutta)
	Sarjapura	1	Sarjapura
		2	Tindloo
		3	Billapura
		4	Adigarakallahalli
		5	Medihalli
		6	Handenahalli

Reconstitution of Hoblis in the Bangalore District—*contd.*

Taluk	Hobli	Number	Village
Anekal	Sarjapuara	7	Bilchikkanahalli
		8	Sollepura
		9	Samenahalli
		10	Bikkanahalli
		11	Chikkatimmasandra
		12	Chikkadunnasandra
		13	Hosahalli
		14	Gopasandra
		15	Kaggalipura
		16	Gulimangala
		17	Madivala
		18	Husakur
		19	Chikka Nagamangala
		20	Rayasandra
		21	Koodlu
		22	Gattahalli
		23	Avalahalli
		24	Chokkasanda
		25	Harohalli
		26	Kommasandra
		27	Kada Agrahara
		28	Yamare
		29	Dommasandra
		30	Chikka Dasarahalli
		31	Tigala Chowdadenahalli
		32	Chembenahalli
		33	Somapura
		34	Ramanaikanahalli
		35	Kattariguppa
		36	Neriga
		37	Gonigattapura
		38	Kutaganahalli
		39	Ittangur
		40	Valagere Kallahalli
		41	Dodda Timmasandra
		42	Mahal Chowdadenahalli
			Inam villages.
		43	Booragunte (Kayamgutta)
		44	Kotuganahalli do
		45	Srirampura do
		46	Chudasandra do
		47	Chikka Vaderapura do
Attibele		1	Attibele
		2	Arehalli
		3	Balloor
		4	Bhaktipura
		5	Dasanapura
		6	Kodlipura
		7	Halehalli
		8	Medihalli
		9	Mayasandra
		10	Kamblipura
		11	Muttasandra
		12	Manchanahalli
		13	Ichangoor
		14	Balagaranahalli
		15	Neraloor
		16	Lakshmisagara
		17	Chandapura
		18	Iggaloor
		19	Banahalli
		20	Bommasandra
		21	Hebbagodi
		22	Gottamaranahalli
		23	Singena Agrahara
		24	Andapura
		25	Hillaiige
		26	Kolatur
		27	Naranaghatta
		28	Muttanallur
		29	Muttanallur Kane
		30	Alibommasandra
		31	Adigondahalli
		32	Harenuru
		33	Bidaraguppe
		34	Chikkanahalli
		35	Indlabele
		36	Jigala
		37	Guddahatti
		38	Yedavanahalli
			Inam villages.
Anekal		39	Giddenahalli (Jodi)
		40	Krishnasagara (Kayamgutta)
		41	Bylahalli do
		42	Bendiganahalli (Jodi)
		43	Tirumagondahalli do
		44	Mummasandra do
		45	Kittiganahalli (Sarvamanya)
		46	Tirupalya do
		47	Veerasandra (Kayamgutta)
		48	Kammasandra do
Jigani		1	Jigani
		2	Harapanahalli
		3	Mantapa
		4	Bairappanahalli
		5	Banneraghatta
		6	Bhootanahalli
		7	Billavaradahalli
		8	Kannayakana Agrahara
		9	Kallukere
		10	Gollahalli
		11	Ramasandra
		12	Bidarakere
		13	Vaderahalli
		14	Hullu Kasavanahalli
		15	Nallasandra
		16	Bhujangadasankere
		17	Koppa
		18	Nanjapura
		19	Hulimangala
		20	Vabasandra
		21	Yarandahalli

Reconstitution of Hoblis in the Bangalore District . *contd.*

Taluk	Hobli	Number	Village
		22	Kachanayakanahalli
		23	Hosahalli
		24	Bandenallasandra
		25	Hennagara
		26	Hennagarakere
		27	Seethanaikanahalli
		28	Haragadde
		29	Nosenur
		30	Nosenur Gollahalli
		31	Kadachikkanahalli
		32	Bommandahalli
		33	Konasandra
		34	Vaderamanchanahalli
		35	Kallubaloo
		36	Bukkasagara
		37	Ragihalli
		38	Banneraghatta kaval
			Inam villages.
		39	Dyavasandra (Jodi)
		40	Bingipura do
		41	Giddenahalli do
		42	Mahantalingapura (Kayamgutta)
		43	Sivanahalli (Kayamgutta)
		44	Begihalli do
Anekal	Jigani	45	Hale Sampigehalli do
		46	Lakshmipura do
		47	Sakalavara do
		48	Hullahalli do
		49	Bingipura (Sarvamanya)
		50	Maragondahalli (Kayamgutta)
		51	Gollahalli do
		52	Kyalasanahalli do
		53	Hinnakki do
		54	Rajapura do
			Total number of villages in the Anekal Taluk—
			Government villages ... 168
			Inam villages ... 37
			205
Devanhalli	Devanhalli	1	Devanhalli
		2	Gokere
		3	Sote Gowdanahalli
		4	Rayasandra
		5	Gangamuthanahalli
		6	Anneswara
		7	Baichapura
		8	Prasannahalli
		9	Hosathota
		10	Sanne Amanikere
		11	Doddasanne
		12	Yartiganahalli
		13	Buvanahalli
		14	Chikkasanne
		15	Bandramanahalli
		16	Thimmegowdana Hosahalli
		17	Doddappanahalli
		18	Palya
		19	Kannamangala
		20	Kempathimmanahalli
		21	Mulli Amanikere
		22	Bommavara
		23	Akkupyate
		24	Hire Amanikere
		25	Kodimanchanahalli
		26	Kasba plantation
		27	Savakannahalli
		28	Nireri
		29	Gullavabanahalli
		30	Attibele
		31	Devenahalli
		32	Vaderahalli
		33	Devastanadakere
		34	Anigatta
		35	Gundlahalli
		36	Bidalur
		37	Kodagurike
		3	Yambrahalli
		39	Dasarahalli
		40	Avati
		41	Gobbarkunte
		42	Guttahalli
		43	Kurbarkunte
			Inam villages.
		44	Budihal (Jodi)
		45	Arasinakunte (Kayamgutta)
		46	Upparahalli (Jodi)
		47	Akkalenahalli Mallenahalli (Jodi)
		48	Gundlubachahalli (Jod)
		49	Kempalinganapura do
		50	Pujanahalli do
		51	Sadahalli do
		52	Jogihalli (Mahal Jodi)
		53	Uganavadi (Jodi)
		54	Chik Chinnanahalli (Jodi)
		55	Settarahalli do
		56	Sanyasihalli do
		57	Byrappanahalli do
		58	Maligenahalli do
		59	Abbachikkanahalli (Kayamgutta)
		60	Lalagondahalli (Kayamgutta)
		61	Binnamangala (Jodi)
	Vadigenahalli	1	Vadigenahalli
		2	Chennasandra
		3	Vadigenahalli Amanikere
		4	Chendenahalli
		5	Kommasandra
		6	Settihalli

Reconstitution of Hoblis in the Bangalore District—*contd.*

Taluk	Hobli	Number	Village
Devanhalli	Vadigenahalli	7	Venkatenahalli
		8	Yeluvahalli
		9	Hardipura
		10	Setakuntahalli
		11	Dharmapura
		12	Mandibele
		13	Gaddada Naganahalli
		14	Timmanahalli
		15	Doddatattamangala
		16	Chikkatattamangala
		17	Kokkarepadiya
		18	Kondenahalli
		19	Guduvanahalli
		20	Koramangala
		21	Dandiganahalli
		22	Byrapura
		23	Harohalli
		24	Bullahalli
		25	Tattamachanahalli Amanikere
		26	Doddasagarahalli
		27	Huratugurki
		28	Muddugurki
		29	Hosahudya
		30	Venkatagirikote
		31	Hosahalli
		32	Gollahalli
		33	Gonur
		34	Bijjavara
		35	Timmanahalli
		36	Holerahalli
		37	Sambaragidakaval
		38	Chinuvondahalli
		39	Chinnappanaikana Hosur
		40	Bodenahalli
		41	Gudlumuddenahalli
		42	Doddamuddenahalli
		43	Chikkanahalli
			Inam villages.
		44	Pura (Jodi)
		45	Harlur Naganahalli (Jodi)
		46	Battrenahalli do
		47	Mangasandra do
		48	Budiyan Padya (Kayamgutta)
		49	Gajjaguppe (Jodi)
		50	Bingipura do
		51	Iraganahalli do
		52	Gururayana Hosur (Kayamgutta)
		53	Narayanapura (Sarvamanya Inam)
	Channarayapatna	1	Channarayapatna
		2	Channarayapatna Amanikere
		3	Aibasapura
		4	Gopasandra
		5	Gummanahalli
		6	Maredi Ane
		7	Koniganabele
		8	Kumbarahalli
		9	Varadenahalli
		10	Papanahalli
		11	Chimachanahalli
		12	Nallappanahalli
		13	Mallepura
		14	Balepura
		15	Nallur Amrayi
		16	Kachipura
		17	Bidalapura
		18	Bidalpurada Amanikere
		19	Mallenahalli
		20	Devanaikanahalli
		21	Somuthanahalli
		22	Gangavarachowdappanahalli
		23	Budigere Amanikere
		24	Handarhalli
		25	Budigere
		26	Kotnateravu
		27	Kondenahalli
		28	Channahalli
		29	Baladimmanahalli
		30	Raddihalli
		31	Bettakote
		32	Hosahalli
		33	Nallur
		34	Bettakote Amanikere
		35	Jannahalli
		36	Harlur
		37	Muddenahalli
		38	Polnahalli
		39	Bommanahalli
		40	Tammenahalli
		41	Yeliyur
		42	Hyadala
		43	Gokerebachahalli
		44	Palya
			Inam villages.
		45	Hiriganahalli (Jodi)
		46	Bidiganahalli do
		47	Kaggalahalli do
		48	Battamarenahalli do
		49	Kavada Dasarahalli do
		50	Agalakote (Kayamgutta)
		51	Tellohalli (Sotria Jodi)
		52	Tellohalli Agrahara (Jodi)
		53	Kommasandra do
		54	Mattabarlu (Kayamgutta)
		55	Chikramanahalli do
		56	Naganayakanahalli (Jodi)
	Jala	1	Chikkajala
		2	Marinaikanahalli
		3	Huttanahalli
		4	Hosahalli
		5	Satnur
		6	Sonnappanahalli

Reconstitution of Hoblis in the Bangalore District—*contd.*

Taluk	Hobli	Number	Village
Devanhalli	Jala	7	Bettahalsoor
		8	Timmasandra
		9	Tarahunse
		10	Kuduragere
		11	Bynahalli
		12	Tarabanahalli
		13	Manankunte
		14	Doddajala
		15	Settigere
		16	Doddajalada Amanikere
		17	Misiganahalli
		18	Muthukadahalli
		19	Mailnahalli
		20	Vunachuru
		21	Bande Kodigenahallikere
		22	Bandi Kodiganahalli
		23	Palya
		24	Singahalli
		25	Aré Bannimangala
		26	Manchappanahosahalli
		27	Marasandra
		28	Mahadeva Kodagahalli
		29	Marenahalli
		30	Bagalur
			Inam villages.
		31	Kattigenahalli (Kayamgutta)
		32	Hunasamaranahalli (Jodi)
		33	Bilnamaranahalli (Kayamgutta)
		34	Kadiganahalli (Jodi)
		35	Nellukunte do
		36	Papanahalli do
		37	Gadenahalli (Kayamgutta)
		38	Chokkanahalli (Jodi)
		39	Chennahalli do
		40	Navarathna Agrahara (Jodi)
		41	Boilahalli (Kayamgutta)
		42	Begur (Jodi)
		43	Chikkanahalli do
		44	Dummanuru do
		45	Gollahalli do
		46	Chalamakunte do
		47	Maralukunte do
		48	Huvinaikanahalli (Kayamgutta)
		49	Dasanaikanahalli (Jodi)
		50	Chagalhalli do
		51	Byappanahalli (Kayamgutta)
		52	Sugata (Jodi)
	Kundana	1	Kundana
		2	Devagannahalli
		3	Hatore
		4	Nagamangala
		5	Singarahalli
		6	Indarasanahalli
		7	Chikkannahosahalli
		8	Jalige
		9	Tinnaloo
		10	Juttanahalli
		11	Bachahalli
		12	Bannimangala Amanikere
		13	Sunnaghatta
		14	Bannimangala
		15	Alurduddanahalli
		16	Viswanathapura
		17	Birasandra
		18	Chapparadahalli
		19	Aruvanahalli
		20	Managondahalli
		21	Gudisettihalli
		22	Koira
		23	Byadarahalli
		24	Mayasandra
		25	Masiganahalli
		26	Tailgere
		27	Kempathimmanahalli
		28	Karahalli
		29	Karahalli Amanikere
		30	Byradenahalli
			Inam villages
		31	Solur (Jodi)
		32	Arasanahalli Peddanahalli (Kayamgutta)
		33	Naraganahalli (Jodi)
		34	Chowdanahalli do
		35	Heggannahalli do
		36	Bettanahalli do
		37	Maragondahalli do
		38	Ardesahalli do
		39	Kamenahalli do
		40	Gandatapura do
		41	Venkatapura do
		42	Lingadhira Gollahalli
		43	Sulikunte (Jodi)
		44	Dyavarahalli (Kayamgutta)
		45	Dodda Chimanahalli (Jodi)
		46	Chinnakempanahalli (Kayamgutta)
		47	Chik Vabanahalli (Jodi)
		48	Dodda Gollahalli do
		49	Roppanahalli (Kayamgutta)
		50	Sayanappanahalli (Jodi)
		51	Vajarahalli do
		52	Chik Gollahalli do
		53	Mudiganahalli do
		54	Yerrappanahalli (Kayamgutta)
		55	Kottagetimmanahalli (Kayamgutta)
		56	Lovenhalli (Kayamgutta)
		57	Muddanaikanahalli do
			Total number of villages in the Devanhalli Taluk—
			Government villages ... 190
			Inam villages ... 89
			279

Reconstitution of Hoblis in the Bangalore District—*contd.*

Taluk	Hobli	Number	Village
Dodballapur	Dodballapur	1	Khasbag
		2	Tigalebagayat
		3	Siddanaikanahalli
		4	Sivapura
		5	Sivapurada Amanikere
		6	Muttasandra
		7	Mallattahalli
		8	Oddarahalli
		9	Togarighatta
		10	Timmasandra
		11	Rajaghattada Amanikere
		12	Rajaghatta
		13	Dasagondahalli
		14	Konaghatta
		15	Linganahalli
		16	Sonnappanahalli
		17	Nagadenahalli
		18	Audinarayanahosahalli
		19	Arehalli Guddadahalli
		20	Basettihalli
		21	Varadhanahalli
		22	Kasavanahalli
		23	Batchahalli
		24	Yekasipura
		25	Majra Hosahalli
		26	Virapura
		27	Chiktumkur
		28	Alahalli
		29	Aralamallige
		30	Kuntanahallli
		31	Menasi
		32	Jakkasandra
		33	Nagasandra
		34	Karianahalli
		35	Dargapura
		36	Veerabhadranapalya
		37	Kakkehalli
		38	Srinivasapura
		39	Dargajogihalli
		40	Kurubarahalli
		41	Kodagihalli
		42	Kesturu
		43	Mandibyadarahalli
		44	Ghalipuje
		45	Talagavara
		46	Neralaghatta
		47	Maralenahalli
		48	Honnaghatta
		49	Madagondahalli
		50	Koluru
		51	Hassamghatta
		52	Amanipalanakere
		53	Palamjogihalli
		54	Gangadharapura
		55	Rojipura
		56	Kodimanagondahalli
			Inam villages.
		57	Pindakuru Timmanahalli (Kayamgutta)
		58	Medihalli (Jodi)
		59	Govindapura (Kayamgutta)
		60	Raghunathapura (Jodi)
		61	Tammasettihalli do
		62	Obadevahalli do
		63	Kolipura do
		64	Yellupura do
		65	Hosahudya do
		66	Gollahalli (Sarvamanya)
		67	Tippapura (Jodi)
		68	Kentanakunte (Sarvamanya)
		69	Kuntanahalli (Jodi)
		70	Bisavanahalli do
Dodballapur	Madhure	1	Madhure
		2	Madhure Amanikere
		3	Chennadevi Agrahara
		4	Karisonnenahalli
		5	Junasandra
		6	Kodihalli
		7	Kukkalahalli
		8	Kallodu
		9	Ramadevanahalli
		10	Uddichikkanahalli
		11	Kenchiganahalli
		12	Kannamangala
		13	Nagenahalli
		14	Chikkavadikere
		15	Puttenahalli
		16	Kannasavadi
		17	Doddavadagere
		18	Kammasandra
		19	Holenahalli
		20	Simpadipura
		21	Honnevara
		22	Isturu
		23	Gandragolipura
		24	Muppadigatta
		25	Kadanuru
		26	Madagondahalli
		27	Mallohalli
		28	Marasandra
		29	Gijjadahalli
		30	Byrasandra
		31	Gondahalli
		32	Dodda Tumkur
		33	Bhadrapura
		34	Purusanahalli
		35	Gulya
		36	Honnadevipura
		37	Puttayyana Agrahara
		38	Narasaiyana Agrahara
		39	Sakaladevipura
		40	Nallenahalli
		41	Thimmasandra
		42	Kukkanahalli

Reconstitution of Hoblis in the Bangalore District—*contd.*

Taluk	Hobli	Number	Village
Dodballapur	Dodbelavangala	1	Dodbelavangala
		2	Ramapura
		3	Mallanaikanahalli
		4	Lingapura
		5	Buchanahalli
		6	Tambenahalli
		7	Halekote
		8	Bommanahalli
		9	Byadra Chakkasandra
		10	Vanigarahalli
		11	Tippuru
		12	Galibilikote
		13	Gundasandra
		14	Madesapura
		15	Hanabe
		16	Sravananuru
		17	Kugonahalli
		18	Chikkanahalli
		19	Bhaktarahalli
		20	Naranahalli
		21	Madharana Hosahalli
		22	Rameswara
		23	Chunchegowdanahosahalli
		24	Huskuru
		25	Ambaligere
		26	Karepura
		27	Hadripura
		28	Chikkahejjaji Amanikere
		29	Chikkahejjaji
		30	Doddahejjaji
		31	Venkatesapura
		32	Kasaghatta
		33	Hullukunte
		34	Appakarenahalli
		35	Tubakunte
		36	Katti Hosahalli
		37	Chikkabelavangala
		38	Sonnenahalli
		39	Kolagere
		40	Kamana Agrahara
		41	Doddamankanala
		42	Chingarenahalli
		43	Bommahalli
		44	Mudlakalenahalli
		45	Gundalahalli
		46	Kadatippuru
		47	Chikmankanala
		48	Konenahalli
		49	Gollahalli
		50	Akkatammanahalli
		51	Joisá Agrahara
		52	Kalludevanahalli
			Inami villages.
		53	Bhimaravathanahalli (Jodi)
		54	Kalenahalli do
		55	Sankarshanahalli do
		56	Kangalapura do
		57	Karepura (Kayamgutta)
		58	Bokipura do
		59	Bhadrapura (Jodi)
		60	Tarammanahalli (Jodi)
		61	Muttagadahalli do
		62	Basavanpura (Kayamgutta)
		63	Mugenahalli (Jodi)
		64	Kadutippenahalli (Jodi)
		65	Siragohalli (Jodi)
Dodballapur	Sasalu	1	Sasalu
		2	Gummanahalli
		3	Harohalli
		4	Upasapura
		5	Gollahalli
		6	Bevinahalli
		7	Majara Hosahalli
		8	Gowdanakunte
		9	Dadighattamadu
		10	Kilarlahalli
		11	Lingadeeranahalli
		12	Kallukunte
		13	Yarramuddanahalli
		14	Jakkenahalli
		15	Hosahalli
		16	Hosakote
		17	Bankenahalli
		18	Vabasandra
		19	Makali
		20	Pura
		21	Gundamgere
		22	Sonnenahalli
		23	Ojenahalli
		24	Bommanahalli
		25	Mallasandra
		26	Ujjani
		27	Kukkalahalli
		28	Kotigemachenahalli
		29	Sulikunte
		30	Benakanamadu
		31	Jalagere
		32	Kadubyadarahalli
		33	Byrapura
		34	Kadalpanahalli
		35	Mallegowdanahalli
		36	Adikewala
		37	Ankonahalli
		38	Byappanahalli
		39	Alpanahalli
		40	Bhaktarahalli
		41	Narasapura
		42	Kanikenahalli
		43	Thodlabande
		44	Ganadalu
		45	Sriramanahalli
		46	Yelamarahalli
		47	Channaviranahalli

Reconstitution of Hoblis in the Bangalore District—*contd*

Taluk	Hobli	Number	Village
		48	Garadagallu
		49	Kadakunte
			Inam villages.
		50	Kamakshihalli (Jodi)
		51	Banavati do
		52	Arudi do
		53	Devapalyapura (Kayamgutta)
		54	Tekalahalli (Jodi)
		55	Byadarahalli (Kayamgutta)
		56	Hosanaganahalli (Jodi)
		57	Suttahalli (Kayamgutta)
		58	Lingenahalli do
		59	Jotipura (Jodi)
		60	Lakkenahalli (Kayamgutta)
		61	Singenahalli do
		62	Tammaganahalli do
		63	Machenahalli
Dodballapur	Tubigere	1	Tubigere
		2	Durgenahalli
		3	Gadlapalya
		4	Mugajinnehalli
		5	Myakala Timmanahalli
		6	Mukkadighutte
		7	Kallukunte
		8	Chikkamuddenahalli
		9	Hiremuddenahalli
		10	Sottanahalli
		11	Bhumenahalli
		12	Kavalahalli
		13	Kachihalli
		14	Marahalli
		15	Melekote
		16	Chikkarayappanahalli
		17	Dodrayappanahalli
		18	Channapura
		19	Heggadihalli
		20	Tapasipura
		21	Machagondahalli
		22	Atcharlahalli
		23	Gulyanandigunda
		24	Sonnavaranahalli
		25	Dandudasakodagihalli
		26	Chavagondahalli
		27	Gantiganahalli
		28	Bidikere
		29	Kuruvigere
		30	Kanchiganala
		31	Tippanahalli
		32	Karanalu
		33	Tirumagondanahalli
		34	Batchahalli
		35	Tapasihalli
		36	Antrahalli
		37	Srinivasapura
		38	Sommasettihalli
		39	Siravara
		40	Kamaluru
		41	Nellukunte
		42	Chilenahalli
		43	Gunjuru
		44	Melinajoganahalli
		45	Kelaginajoganahalli
		46	Lagumenahalli
		47	Kelaginaikarahalli
		48	Melinanaikarahalli
		49	Hadonahalli
			Inam villages.
		50	Subbaraya Nagenahalli (Jodi)
		51	Jodimyakalahalli do
		52	Yedlahalli do
		53	Lakkasandra (Kayamgutta)
		54	Mastitimmanahalli (Sarvamanya
		55	Udanahalli (Jodi)
		56	Kurubarahalli do
		57	Bidikere Agrahara (Jodi)
		58	Hiriyanaguddadahalli do
		59	Muttukadahalli do
		60	Naraganahalli (Sarvamanya)
		61	Allalasandra (Jodi)
		62	Karenahalli do
		63	Kalludevanahalli (Jodi)
		64	Majara Hosahalli do
		65	Chokkanahalli do
		66	Dennehalli do
			Total number of villages in the Dodballapur Taluk—
			Government villages... 245
			Inam do ... 61
			306
Nelamangala	Nelamangala	1	Nelamangala
		2	Mallepura
		3	Basavanahalli
		4	Gabbur
		5	Byadarahalli
		6	Kempalinganahalli
		7	Gangadharanapalya
		8	Bommanahalli
		9	Yentaganahalli
		10	Mahadevapura
		11	Dodkarenahalli

Reconstitution of Hoblis in the Bangalore District—*contd.*

Taluk	Hobli	Number	Village
		12	Kada Karenahalli
		13	Lingenahalli
		14	Mallarabanavadi
		15	Kodappanahalli
		16	Jakkasandra
		17	Arasinakunte
		18	Mylanahalli
		19	Kanagondanahalli
		20	Byrasettihalli
		21	Bolamaranahalli
		22	Arjunabettahalli
		23	Hyadalu
		24	Gollahalli
		25	Kachenahalli
		26	Bettahalli
		27	Tyagadahalli
		28	Baradi
		29	Mandigere
		30	Virananjipura
		31	Agasarahalli
		32	Tirumalapura
		33	Begur
		34	Araledibba
		35	Malunagatihalli
		36	Marohalli
		37	Tonachanakuppe
		38	Mylanahalli
Nelamangala	Nelamangala	39	Byranahalli
		40	Yarramanchanahalli
		41	Hurlihalli
		42	Chikkanaranahalli
		43	Bhusandra
		44	Yelachagere
		45	Madalakote
		46	Kempuhalli
		47	Kenchanahalli
		48	Gedlahalli
		49	Garanabele
		50	Honnasandra
		51	Manchenahalli
		52	Kempalinganahalli
		53	Chowdasandra
		54	Mantanakurchi
		55	Bhatrahalli
		56	Irrigenahalli
		57	Kanavanahalli
		58	Bolamaranahalli
		59	Goravanahalli
		60	Soldevanahalli
		61	Avalkuppe
		62	Hosahalli
			Inam villàges.
		63	Bhavikere (Jodi)
		64	Gandragulipura (Jodi)
		65	Vajarahalli do
		66	Koratagere do
		67	Vadrapalya do
		68	Viraraghavapalya do
		69	Kulipura (Kayamgutta)
		70	Krishnarajapalya do
		71	Hanumanapalya do
		72	Sitarambhattarapalya (Kayamgutta)
		73	Obanaikanahalli (Sarvamanya)
		74	Hajeepalya do
		75	Mallapura do
		76	Narasimhapalya (Kayamgutta)
		77	Narasipalya (Jodi)
		78	Machanaikanahalli (Kayamgutta)
	Nelamangala	79	Srinivaspura (Kayamgutta)
		80	Anantapura do
		81	Ahobalapalya (Kayamgutta)
		82	Narayana Row Palya do
		83	Koneripura (Jodi)
		84	Balaguruvanapalya (Jodi)
		85	Deganahalli do
		86	Aralasandra do
		87	Budihal do
		88	Krishnarajapalya (Kayamgutta)
		89	Byrasandra (Jodi)
		90	Hanchipura do
		91	Bidanapalya do
		92	Hanasavadi do
		93	Kotnahalli do
		94	Krishnarajapalya (Kayamgutta)
		95	Narasimhapalya do
		96	Naranappanapalya do
Nelamangala	Dasanapura	1	Dasanapura
		2	Hullegowdanahalli
		3	Venkatapura
		4	Byregowdanahalli
		5	Lakkenahalli
		6	Kenganahalli
		7	Nagaruru
		8	Honnasandra
		9	Mattihalli
		10	Muniyanapalya
		11	Agraharpalya
		12	Govindapura
		13	Vaderahalli
		14	Alur
		15	Adikemaranahalli
		16	Makli
		17	Madavara
		18	Chikbidarakallu
		19	Totadaguddadahalli
		20	Kuduregere
		21	Madinaikanahalli
		22	Siddanahosahalli
		23	Bettingere
		24	Sayappanahalli
		25	Huskur
		26	Pillahalli
		27	Totagere
		28	Kukkanahalli
		29	Sondekoppa

Reconstitution of Hoblis in the Bangalore District—*contd.*

Taluk	Hobli	Number	Village
Nelamangala	Dasanapura	30	Ravatanahalli
		31	Kadarnahalli
		32	Nagasandra
		33	Avverahalli
		34	Honningere
		35	Mallasandra
		36	Kadabagere
		37	Kittanelli
		38	Vadrahalli
		39	Mantalu
		40	Gowdahalli
		41	Bettahalli
		42	Gundigere
		43	Dombarahalli
		44	Kachohalli
		45	Gangondanahalli
		46	Bylakonenahalli
		47	Machohalli
			Inam villages.
		48	Ramapalya (Jodi)
		49	Kodipalya do
		50	Gajjigadakuppe (Jodi)
		51	Kammasandra do
		52	Gavipalya do
		53	Narsipura (Kayamgutta)
		54	Tammenahalli do
		55	Sreekantapura do
		56	Hosahallipalya do
		57	Torenagasandra do
		58	Hanumantasagara do
		59	Heggaddevanapura (Sarvamanya)
		60	Huchanapalya (Jodi)
		61	Bommasettihalli do
		62	Sambhatrapalya do
		63	Seshagiri Rao Palya (Kayamgutta)
		64	Mariyanapalya (Kayamgutta)
		65	Syedamiyanapalya do
		66	Gollarpalya (Jodi)
		67	Gabbi Siddanahalli (Jodi)
		68	Giddanahalli (Kayamgutta)
		69	Byandahalli (Jodi)
		70	Harokyatanahalli (Kayamgutta)
		71	Lakkenahalli do
		72	Srikantapura do
	Somapura	1	Somapura
		2	Kasba Nijigal
		3	Lakkur
		4	Timmanaikanahalli
		5	Kallanaikanahalli
		6	Agalakuppe
		7	Madenahalli
		8	Nijagal-Kempohalli
		9	Channohalli
		10	Ramanahalli
		11	Kamalapura
Nelamangala	Somapur	12	Chandanahosahalli
		13	Tattikere
		14	Niduvanda
		15	Devarahosahalli
		16	Hale-Nijagal
		17	Halenahalli
		18	Karemane
		19	Yalekyatanahalli
		20	Bennigere
		21	Bettadahosahalli
		22	Narsipura
		23	Benachanahalli
		24	Heggunda
		25	Imachenahalli
		26	Makenahalli
		27	Bugadihalli
		28	Kuruvalatimmanahalli
		29	Govindapura
		30	Kengalu
		31	Honnenahalli
		32	Yedahalli
		33	Sripatihalli
		34	Avverahalli
		35	Virasagara
		36	Kengalakempohalli
		37	Kambalu
		38	Basavapatna
		39	Malekattiganur
		40	Kerekattiganur
		41	Aladahalli
		42	Guruvanahalli
		43	Machinahalli
		44	Kasaraghatta
		45	Gantehosahalli
		46	Gottigere
		47	Gedlahalli
		48	Billanakote
		49	Mugalahalli
		50	Hosahalli
		51	Dasenahalli
		52	Maralukunte
		53	Chikkannanahalli
		54	Kuntabommanahalli
		55	Hulleharave
		56	Chikkanapalya
		57	Giriyanpalya
		58	Baragur
		59	Venkatapura
		60	Bhimapura
		61	Dasarahalli
		62	Madagada Amanikere
		63	Madaga
		64	Maragondanahalli
		65	Dasanapura
			Inam villages.
		66	Biragondanahalli (Jodi)
		67	Srinivasapura do
		68	Anantapura do

Reconstitution of Hoblis in the Bangalore District—*contd.*

Taluk	Hobli	Number	Village
Nelamangala	Somapura	69	Gundenahalli (Jodi)
		70	Narayanapura do
		71	Jajur (Kayamgutta)
		72	Pemmanahalli do
		73	Sivagange (Sarvamanya)
		74	Kutaghatta do
		75	Gangenpura do
		76	Baragenahalli do
		77	Bharatipura do
	Tyamgondlu	1	Tyamagondlu
		2	Dodbele
		3	Tadasighatta
		4	Kenchenapura
		5	Isavanahalli
		6	Ballagere
		7	Tyamagondlu Amanikere
		8	Muddalinganahalli
		9	Halu Rampura
		10	Mavinakommanahalli
		11	Hasarahalli
		12	Byranaikanahalli
		13	Biragondanahalli
		14	Lutchmanapura
		15	Jakkanahalli
		16	Minnapura
		17	Guddegowdana Chennahalli
		18	Somsagara
		19	Tippasettihalli
		20	Kalalaghatta
		21	Gulapura
		22	Bidalur
		23	Tavarakere
		24	Kodipalya
		25	Dod Chennahalli
		26	Obalapura
		27	Hadihosahalli
		28	Narasapura
		29	Haruvesandra
		30	Kodihalli
		31	Alanaikanahalli
		32	Govanahalli
		33	Kodigehalli
		34	Manne Rampura
		35	Manne
		36	Siraganahalli
		37	Makankuppe
		38	Kannuhalli
		39	Totanahalli
		40	Jaksandra
		41	Appagondanahalli
		42	Karehalli
		43	Vaddakunte
		44	Goraghatta
		45	Maddenahalli
		46	Mavinakunte
		47	Karimaranahalli
		48	Krishnarajpura
		49	Timmasandra
		50	Talekere
Nelamangala	Tyamgondlu	51	Dodderi
		52	Kaluvanahalli
		53	Sulukunte
		54	Mahimapura
		55	Karenahalli
		56	Chikkannana Ane
		57	Byadarahalli
		58	Tippagondanahalli
		59	Laksandra
		60	Pallarahalli
		61	Halkur
		62	Honnarayanahalli
		63	Kodigi Bommanahalli
		64	Arebommanahalli
		65	Chikkanahalli
			Inam villages.
		66	Kempapur (Jodi)
		67	Govindapura do
		68	Varanayakanahalli (Sarvamanya)
		69	Nimbenahalli (Jodi)
		70	Lakkenahalli do
		71	Lakkappanahalli do
		72	Venkatapura (Kayamgutta)
		73	Gundenahalli do
		74	Krishnarajapalya do
			Total number of villages in the Nelamangala Taluk—
			Government villages 239
			Inam do 80
			319
Magadi	Magadi	1	Magadi
		2	Somakkana Matta
		3	Gummasandra
		4	Balekatte
		5	Tubinakere
		6	Agalakote
		7	Halasabele
		8	Donakuppe
		9	Koudahalli
		10	Tatabalu
		11	Vaddarapalya
		12	Viswanathapura
		13	Satnuru
		14	Alasettihalli
		15	Juttanahalli
		16	Sripathihalli
		17	Harohalli
		18	Kalya
		19	Upparati
		20	Kalari Kaval
		21	Kalari
		22	Kodipalya
		23	Halasinganahalli
		24	Hongekaval

Reconstitution of Hoblis in the Bangalore District—*contd.*

Taluk	Hobli	Number	Village
Magadi	Magadi	25	Chandurayanahalli
		26	Hosahalli
		27	Bychapura
		28	Karagadahalli
		29	Belagumba
		30	Taggikuppe
		31	Dubbagottige
		32	Byalkere
		33	Kanchagaranahalli
		34	Singrapalya
		35	Harti
		36	Bachenahatti
		37	Tagachaguppe
		38	Adikemaranahalli
		39	Kallurn
		40	Singadasanahalli
		41	Shanbhoganahalli
		42	Panakanakallu
		43	Timmasandra
		44	Tirumale
		45	Vengalappanahalli
		46	Marlagondla
		47	Melinahalli
			Inam villages.
		48	Uduvegere (Jodi)
		49	Dandigepura (Kayamgutta)
		50	Netanahalli (Jodi)
		51	Kempasagara do
		52	Basavapatna do
		53	Varadohalli do
		54	Hujigallu (Kayamgutta)
		55	Mayanayakanahalli (Jodi)
		56	Vitthalapura do
		57	Aladakattepalya (Kayamgutta)
		58	Bettadasipalya do
		59	Nasarumavinakatte do
		60	Nagasettihalli (Jodi)
		61	Rangenahalli do
		62	Gundepalya do
		63	Sidaganahalli do
		64	Byadarahalli do
		65	Gollarpalya do
		66	Vardenahalli do
	Madabal	1	Sonnenahalli
		2	Settarahalli
		3	Managallu
		4	Heligehalli
		5	Hulikatte
		6	Marladevanapura
		7	Varthahalli
		8	Alalakuppe
		9	Tripurantakachannapura
		10	Belagavadi
		11	Koramangala
		12	Yelagadahalli
		13	Chakrabhavi
		14	Mattikere
		15	Gattipura
		16	Nerlavadi
		17	Lakkasandra
		18	Gerahalli
		19	Atchanahalli
		20	Annekaranahalli
		21	Attingere
		22	Hanchiguppe
		23	Nagamangala
		24	Sambudevanahalli
		25	Tyagadarapalya
		26	Pura
		27	Karlamangala
		28	Guddahalli
		29	Nelapatna
		30	Naikanapalya
		31	Kalyanavadera Mata
		32	Matta
		33	Manchanabele
		34	Dabbaguli
		35	Avverahalli
		36	Virapura
		37	Chikkamaskallu
		38	Dodmaskallu
		39	Madabalu
		40	Savandurg State Forest
		41	Siddadevarabetta State Forest
			Inam villages.
		42	Channapura (Jodi)
		43	Bolenahalli do
		44	Hulavenahalli do
		45	Mallenahalli do
		46	Sigekuppe do
		47	Kalludevanahalli (Jodi)
		48	Subbaraya Byadarahalli (Jodi)
		49	Sadamaranahalli (Kayamgutta)
		50	Gejjagarakuppe (Jodi)
		51	Kotigaranahalli do
		52	Guddalahalli (Kayamgutta)
		53	Rangacharipalya (Jodi)
		54	Papasastripalya (Kayamgutta)
		55	Basavenahalli do
		56	Karlahalli do
		57	Polohalli do
		58	Subbasastripalya (Jodi)
	Tavarekere	1	Tavarekere
		2	Marenahalli
		3	Cholanaikanahalli
		4	Madapatna
		5	Hullenahalli
		6	Sulavara
		7	Byalalu
		8	Chikkanahalli
		9	Dodderi
		10	Donnenahalli

Reconstitution of Hoblis in the Bangalore District—*contd.*

Taluk	Hobli	Number	Village
Magadi	Tavarekere	11	Chunchanaguppe
		12	Ajjanahalli
		13	Dodmaranahalli
		14	Puradapalya
		15	Paddanapalya
		16	Muddaiyanapalya
		17	Karagiripura
		18	Punagamaranahalli
		19	Ganapatihalli
		20	Ketohalli
		21	Ketohalli Narasimhapura
		22	Ketohalli Rampura
		23	Chikkeluru Rampura
		24	Chikkeluru Venkatapura
		25	Seshagiripura
		26	Koluru
		27	Yelachaguppe Rampura
		28	Channenahalli
		29	Honnaganahatti
		30	Varturu
		31	Devamachohalli
		32	Naganahalli
		33	Tavakadahalli
		34	Sulivara Rampura
			Inam villages.
		35	Ganakal (Kayamgutta)
		36	Gangappanahalli do
		37	Tippagondahalli (Jodi)
		38	Kempaguddanahalli (Kayamgutta)
		39	Vadahalli (Jodi)
		40	Koluru Gururayapura (Kayamgutta)
		41	Koluru Nanjundapura do
		42	Chikkoluru (Jodi)
		43	Yelachaguppe (Kayamgutta)
		44	Kurubarahalli do
		45	Varturunarasimhapura (Kayamgutta)
		46	Gangenahalli (Kayamgutta)
		47	Baichaguppe do
		48	Devamachchalli Narasimhapura (Kayamgutta)
		49	Jogerahalli (Jodi)
		50	Kutlu do
	Solur	1	Solur
		2	Tubarapalya
		3	Vambattanagunte
		4	Tattekere
		5	Arasinakunte
		6	Palanahalli
		7	Udakunte
		8	Bairasandra
		9	Mailanahalli
		10	Muganahalli
		11	Aluru
Magadi	Solur	12	Siraganahalli
		13	Banavadi
		14	Santhapura
		15	Muppenahalli
		16	Ranganabetta
		17	Ramanahalli
		18	Goruru
		19	Lingenahalli
		20	Kannasandra
		21	Lakkenahalli
		22	Chikkanahalli
		23	Kanakenahalli
		24	Narasapura
		25	Hemapura
		26	Rangenahalli
		27	Bittasandra
		28	Bairapura
		29	Vaddarahalli
		30	Yennigere
		31	Chikkasoluru
		32	Somedevanahalli
		33	Hyaganahalli
		34	Vuddandahalli
		35	Kudluru
		36	Biravara
		37	Gudemaranahalli
		38	Hosahalli
		39	Koramangala
		40	Gargeswarapura
		41	Hakkinalu
		42	Naganahalli
		43	Malluru
		44	Bhantraguppe
		45	Gollahalli
		46	Motagondahalli
		47	Marikuppe
		48	Basavenahalli
			Inam villages.
		49	Timmasandra (Jodi)
		50	Mallapura do
		51	Kalluhattipalya do
		52	Channohalli do
		53	Parvatapalya do
		54	Gangenapura do
		55	Kempapura do
		56	Mallikarjunapalya (Kayamgutta)
		57	Kuppemala (Jodi)
		58	Kalyanapura do
		59	Byadarahalli do
		60	Thirumalapura do
		61	Kottagondahalli do
		62	Torechennohalli do
		63	Mummenahalli do
		64	Bommanahalli do
		65	Marianahalli do
		66	Pemmanahalli do
		67	Kodihalli do

651

Reconstitution of Hoblis in the Bangalore District—*contd.*

Taluk	Hobli	Number	Village
Magadi	Kuduru	1	Kuduru
		2	Gollahalli
		3	Biskuru
		4	Kodihalli
		5	Tummanahalli
		6	Hulikallu
		7	Sugganahalli
		8	Kenkere
		9	Kannur
		10	Marasandra
		11	Naganahalli
		12	Chowdi Beguru
		13	Chikkamasakallu
		14	Gundigere
		15	Kempapura
		16	Hanchi Basavanapalya
		17	Kagimadu
		18	Ramanahalli
		19	Ajjanahalli
		20	Adarangi
		21	Bettahalli
		22	Srigiripura
		23	Dollenahalli
		24	Hosahalli
		25	Veerasagara
		26	Veerapura
		27	Kutnigere
		28	Kenchaiyanapura
		29	Malligunte
		30	Aladakatte
		31	Kannasandra
		32	Madigondahalli
		33	Dammanakatte
		34	Kempuhalli
		35	Vajarahalli
		36	Hanumapura
		37	Cheluru
		38	Mannuganahalli
		39	Narasandra
		40	Surappanahalli
		41	Maruru
		42	Bisalahalli
		43	Muthasagara
		44	Byrapura
		45	Parvathapura
		46	Lakkenahalli
		47	Ramanahalli
			Inam villages.
		48	Mallappanahalli (Kayamgutta)
		49	Gowrapura (Sarvamanya)
		50	Krishnapura (Kayamgutta)
	Tippasandra	1	Thippasandra
		2	Baginagere
		3	Baginakere Amrut Mahal Kaval
		4	Chikkakalya
		5	Sankighatta
		6	Sankighattada Amrut Mahal Kaval
		7	Naranapura
		8	Gangonahalli
		9	Sannenahalli
		10	Tavarekere
		11	Basavanapalya
		12	Chikkahalli
		13	Doddahalli
		14	Honnapura
		15	Virupapura
		16	Bychanahalli
		17	Mayisandra
		18	Yellapura
		19	Hullenahalli
		20	Palyadahalli
		21	Nerlakere
		22	Mallasandra
		23	Srinivasapura
		24	Sivanasandra
		25	Janagere
		26	Kempapura
		27	Angajanahalli
		28	Marisomanahalli
		29	Dodsomanahalli
		30	Kenchanahalli
		31	Chikmudigere
		32	Ayyandahalli
		33	Doddamudigere
		34	Talekere
		35	Siddapura
		36	Kallanekaval
		37	Muttugadahalli
			Inam villages.
		38	Dandenahalli (Jodi)
		39	Kamasagara do
		40	Hebbalalu do
		41	Raghuvanapalya do
		4	Annaiyasastripalya do
		43	Raghunathapura do
		44	Machohalli do
		45	Santhanapalya do
			Total number of villages in the Magadi Taluk— Government villages ...254; Inam villages ... 82; Total ...336
Closepet Sub-Taluk	Closepet	1	Closepet
		2	Archikarahalli
		3	Ijuru
		4	Kottipurada Amanikere
		5	Kottipura
		6	Bolappanahalli Amanikere
		7	Jigenahalli
		8	Vaderhalli

Reconstitution of Hoblis in the Bangalore District —*contd.*

Taluk	Hobli	Number	Village
	Closepet	9	Hallimala
		10	Harisandra
		11	Lakkasandra
		12	Sugganahalli
		13	Bommachanahalli
		14	Hagalahalli
		15	Bolappanahalli
		16	Basavanapura
		17	Bilagumba
		18	Chiksulikere
		19	Mayigowdanahalli
		20	Madapura
		21	Kenchigarahalli
		22	Ketohalli
		23	Balaguli
		24	Kempanahalli
		25	Kesavapura
			Inam village.
		26	Dharapura (Jodi)
Closepet Sub-Taluk	Kutagallu	1	Kuttagallu
		2	Chowdeswarahalli
		3	Shanbhoganahalli
		4	Danaikanapura
		5	Kyasapura
		6	Jalamangala
		7	Thadakavagalu
		8	Akkuru
		9	Virupasandra
		10	Kutharabavi
		11	Dasarahalli
		12	Chikgangavadi
		13	Dodgangavadi
		14	Ibbalakahalli
		15	Yerahalli
		16	Arahalli
		17	Ankanahalli
		18	Malehalli
		19	Vadavatta
		20	Doddasulikere
		21	Kempavaderahalli
			Inam villages.
		22	Anamanahalli (Sarvamanya)
		23	Chamanahalli do
		24	Kolumaranakuppe (Jodi)
		25	Thalavadi (Sarvamanya)
	Kailancha	1	Kailancha
		2	Hulikeregunnuru
		3	Kotahalli
		4	Sabkere
		5	Nelamale
		6	Ammanapura
		7	Ankallu Hosadoddi Kadanakuppe
		8	Attikuppe Doddanahalli
		9	Mallengere
		10	Lakkaganahalli
		11	Tenginakallu
		12	Sivanahalli
		13	Kurubarahalli
		14	Kavanapura
		15	Jakkanahalli
		16	Ankanahalli
		17	Bannikuppa
		18	Vibhutikere
		19	Lakkappanahalli
		20	Achalu
		21	Chikkenahalli
		22	Kumbapura
		23	Channanahalli
		24	Sidlakallu
		25	Hunasanahalli
		26	Kunagallu
		27	Nagohalli
		28	Thammanaikanahalli
		29	Hebbakodi
		30	Anehalli
		31	Bennehalli
		32	Manchegowdanapalya
			Inam village.
		33	Hosahalli (Kayamgutta)
Closepet Sub-Taluk	Bidadi	1	Bidadi
		2	Hejjala
		3	Kurubarakarenahalli
		4	Kempadyavanahalli
		5	Bettingere
		6	Ganakallu
		7	Bannikuppe
		8	Borehalli
		9	Kakaramanahalli
		10	Vajarahalli
		11	Manchanaikanhalli
		12	Avaragere
		13	Muddapurakarenahalli
		14	Ketaganahalli
		15	Bananduru
		16	Bilkempanahalli
		17	Talakuppe
		18	Doddakuntanahalli
		19	Bychohalli
		20	Chikkuntanahalli
		21	Syanamangala
		22	Mandalahalli
		23	Baleveeranahalli
		24	Abbanakuppe
		25	Bannigiri
		26	Hosuru
		27	Bairamangala
		28	Allalasandra
		29	Kanchagaranahalli
		30	Kempaiyanapalya
		31	Gopahalli
		32	Ramanahalli
		33	Ittamadu
		34	Ivagalu
		35	Heggadigere

Reconstitution of Hoblis in the Bangalore District—*contd.*

Taluk	Hobli	Number	Village
Closepet Sub-Taluk.	Bidadi.	36	Kallugopahalli
		37	Kenchanakuppe
			Inam Villages.
		38	Seshagirihalli (Sarvamanya)
		39	Lakshmisagara (Kayamgutta)
		40	Hirehalli do
		41	Bhimanahalli do
		42	Yerepalya do
		43	Kodiyalkarenahalli (Jodi)
		44	Gollarpalya (Kayamgutta)
		45	Uragahalli (Sarvamanya)
			Total number of villages in the Closepet Sub-Taluk—
			Government villages...115
			Inam do ... 14
			Total .. 129
Channapatna.	Channapatna	1	Channapatna
		2	Nagavara
		3	Chikkenahalli
		4	Magenahalli
		5	Devarahosahalli
		6	Torehosuru
		7	Vondaraguppe
		8	Komanahalli
		9	Mailanaikanahalli
		10	Patlu
		11	Honniganahalli
		12	Gendamadu
		13	Sukravarpete
		14	Tattikere
		15	Kottanahalli
		16	Bommanahalli
		17	Chikmaluru
		18	Lalagatta
		19	Mangalavarapete
		20	Mailanathapura
		21	Timmasandra
		22	Brahmanipura
		23	Thagachigere
		24	Attiguppe
		25	Nilakantenahalli
		26	Nilsandra
		27	Sunnaghatta
		28	Sanabanahalli
		29	Kodipura
		30	Honganuru
		31	Santhemogenahalli
		32	Rampura
			Inam Villages.
		33	Abburu (Sarvamanya)
		34	Cholamaranahalli (Jodi)
		35	Kudluru (Sarvamanya)
		36	Kannamangala do
		37	Yellihosahalli do
Channapatna.	Virupakshipura.	1	Malagalu
		2	Agraharavalagarahalli
		3	Banduruvalagarahalli
		4	Aralalusandra
		5	Ankusanahalli
		6	Hosahalli
		7	Somanathapura
		8	Menasiganahalli
		9	Suleri
		10	Avverahalli
		11	Vitlenahalli
		12	Virupasandra
		13	Sowdahalli
		14	Mangadahalli
		15	Akkuru
		16	Buhalli
		17	Sadahalli
		18	Nagapura
		19	Ballapatna
		20	Singarajapura
		21	Krishnapura
		22	Bairasettihalli
		23	Oojjanahalli
		24	Banagahalli
		25	Hunasanahalli
		26	Kodihosahalli
		27	Bukkasagara
		28	Kodamballi
		29	Haniyuru
		30	Shanbhoganahalli
		31	Vaddarahalli
		32	Harokoppa
		33	Ambadahalli
		34	Bachahalli
		35	Honniganahalli
		36	Halehalli
		37	Nunnuru
		38	Byadarahalli
		39	Karekoppa
		40	Neraluru
		41	Baichapura
		42	Yeliyuru
		43	Jagadapura
		44	Yelethotadahalli
		45	Kallapura
		46	Nelamakanahalli
		47	Iggaluru
		48	Siddapura
		49	Saraguru
		50	Ketaravaderahalli
		51	Chowgeredoddi
		52	Virupakshipura
			Inam Villages.
		53	Dyavapatna (Kayamgutta)
		54	Naralapura (Jodi)
		55	Kondapura (Sarvamanya)
		56	Sogala do
		57	Madapura do
		58	Garkahalli do
		59	Banantanahalli (Jodi)

Reconstitution of Hoblis in the Bangalore District—*contd.*

Taluk	Hobli	Number	Village
Channapatna.	Maluru.	1	Ammahallidoddi
		2	Kelagere
		3	Kadaramangala
		4	Harohallidoddi
		5	Byranaikanhalli
		6	Siddanahalli
		7	Gowdigere
		8	Bevuru
		9	Timmasandra
		10	Kannasandra
		11	Tavatanahallidoddi
		12	Mandya
		13	Tavatanahalli
		14	Guddehosuru
		15	Aralapura
		16	Byadarahalli
		17	Honnanaikanahalli
		18	Tenkanahalli
		19	Huluvadi
		20	Mankonda
		21	Anigere
		22	Seebanahalli
		23	Dyavarahalli
		24	Mudigere
		25	Maluru
		26	Settihalli
		27	Koluru
		28	Muttikere
		29	Kadukottanahalli
		30	Sankalagere
		31	Belakere
		32	Hottiganahosahalli
		33	Govindanahalli
		34	Marchanahalli
		35	Chokkere
		36	Kurnagere
		37	Chakkaluru
		38	Malurupatna
		39	Kukkuru
		40	Tubinakere
		41	Makali
		42	N idolle
		43	Dasavara
			Inam village.
		44	Damanagundee
			Total number of villages in the Channapatna Taluk.
			Govt. villages ... 127
			Inam do ... 13
			Total ... 140
Kankanhalli.	Harohalli.	1	Harohalli
		2	Malalagere
		3	Marasandra
		4	Devarakaggalahalli
		5	Vaderahalli
		6	Mudenahalli
		7	Hulagondanhalli
		8	Yarahalli
		9	Medumaranahalli
		10	Chikkasandra
		11	Bhimasandra
		12	Konasandra
		13	Dyavasandra
		14	Gottigehalli
		15	Somanahalli
		16	Sunkadakatte
		17	Ogichudahalli
		18	Naganaikanahalli
		19	Hutri
		20	Vaddarapalya
		21	Alakabalalu
		22	Tattakuppe
		23	Hosakote
		24	Nettigere
		25	Ravugollu
		26	Gabbadi
		27	Yedamadu
		28	Kaggalahalli
		29	Kadasikoppa
		30	Kolliganahalli
		31	Gollahalli
		32	Doddakallabalu
		33	Ragihalli State Forest
		34	Gullahatti kaval
		35	Bethallikaval
		36	Gabbadikaval
		37	Chulkankere kaval
		38	Kurubarahalli
		39	Bannikuppe
		40	Kanavekatte
		41	Pichankere
		42	Kotgal
		43	Chikkalbal
		44	Belguli
		45	Aratabele
		46	Bandiganahalli
		47	Mudavadi
		48	Singasandra
			Inam villages.
		49	Harvatipalya (Kayamgutta)
		50	Nelagulli do
		51	Chudahalli do
		52	Gulakamale do
		53	Tharalu do
		54	Kaglipura (Sarvamanya)
Kankanhalli.	Kankanhalli.	1	Kankanhalli
		2	Chiranakuppe
		3	Chakanahalli
		4	Kutugondanahalli
		5	Bekuppe
		6	Nidigal Aralalasandra
		7	Kebbehalli
		8	Koonur

Reconstitution of Hoblis in the Bangalore District—*contd.*

Taluk	Hobli	Number	Village
Kankanhalli	Kankanhalli	9	Narayanapura
		10	Chikkabettahalli
		11	Nidagallu
		12	Aralalu
		13	Tamasandra
		14	Tigalarahalli
		15	Anamanahalli
		16	Aranakuppe
		17	Baradanahalli
		18	Virupasandra
		19	Sivanahalli
		20	Keralalasandra
		21	Sigekote
		22	Horalagallu
		23	Muradihosahalli
		24	Halagondahalli
		25	Tungani
		26	Rampura
		27	Agrahara
		28	Aralalsandra
		29	Kallahalli
		30	Rayisandra
		31	Ganalu
		32	Alimaranahalli
		33	Vadedoddi
		34	Chikkamuduvadi
		35	Anajavadi
		36	Byalalu
		37	Murakani
		38	Bilikottanur
		39	Udarahalli
		40	Banantamari Forest
		41	Basavanahalli majre of Honnahalli
			Inam Villages.
		42	Ramanahalli (Kayamgutta)
		43	Dolhalli (Kayamgutta)
		44	Somadyavanahalli (Jodi)
		45	Hanumanahalli (Kayamgutta)
		46	Chakasandra do
		47	Mallappanahosahalli do
	Maralavadi	1	Turukarahosalli
		2	Marasandra
		3	Kiranagere
		4	Agara
		5	Doddasadenahalli
		6	Anehosahalli
		7	Chilur
		8	Kattaranetta
		9	Jaksandra
		10	Chiksadenahalli
		11	Chikdevarahalli
		12	Dodmaralavadi
		13	Chikmaralavadi
		14	Maligemattu
		15	Linganapura
Kankanhalli	Maralavadi	16	Hosahalli
		17	Padavanagere
		18	Ballagere
		19	Thokasandra
		20	Guttahunse
		21	Terubeedi
		22	Davarahalli
		23	Yelachavadi
		24	Sitalavadi
		25	Bilikal Forest
		26	Ajjegowdanavalse
		27	Mavattoor
		28	Sundaghatta
		29	Bantanalu
		30	Muniyambalu
		31	Bhimasandra
		32	Huliyappanahalli
		33	Marasarahalli
		34	Kallankuppe
		35	Banavasi
		36	Rampur Karvinkatte kaval
		37	Avaremala
		38	Rampur Gatralkere kaval
		39	Gadarnahalli
		40	Attikuppe
		41	Goduru
		42	Bilankuppe
		43	Tattikere
		44	Maniyambalu
		45	Kolalgandi
			Inam Villages.
		46	Bachahalli (Jodi)
	Kodihalli	1	Kodihalli
		2	Ajjabasavanahalli
		3	Yerangere
		4	Hanchaguli
		5	Herandyavanahalli
		6	Kengalnathangollahalli
		7	Doddakabbahalli
		8	Arakere
		9	Kempalanatta
		10	Salabanni
		11	Alanetta
		12	Hanakadaburu
		13	Garalapura
		14	Kittamailana Gollahalli
		15	Bommasandra
		16	Balepura
		17	Kebbere
		18	Hunsalanetta
		19	Mallapura
		20	Bijjahalli
		21	Gattigonda
		22	Yakkeguli
		23	Dodguli

Reconstitution of Hoblis in the Bangalore District—*concld.*

Taluk	Hobli	Number	Village
	Kodihalli	24	Bannimukkodlu
		25	Tippur
		26	Tattekere
		27	Hunusanahalli
		28	Hosadurga
		29	Irlapodu
		30	Channasandra
		31	Gudeveeranahosahalli
		32	Bilidale
		33	Ganganahalli
		34	Kudigalane
		35	Hunsanakodihalli
		36	Balagondanahalli
		37	Chikkamukkodlu
		38	Honniganahalli
		39	Manchinetta
		40	Yalachahalli
		41	Basavapatnavirasandra
		42	Kolagundanahalli
			Inam Villages.
		43	Yerahalli (Sarvamanya)
		44	Tattakuppe (Kayamgutta)
		45	Halasur (Jodi)
Kankanhalli	Uyyamballi	1	Uyyamballi
		2	Alahalli
		3	Nallahalli
		4	Helagahalli
		5	Hodikekatte
		6	Haira
		7	Purushagondanahalli
		8	Hulya
		9	Makkalanda
		10	Chilamvadi
		11	Virasandra
		12	Mahimanahalli
		13	Chikmudade
		14	Naikanahalli
		15	Puradoddi
		16	Hegganur
		17	Mahalli
		18	Chilamvadi Forest
		19	Muggur Forest
		20	Yedamaranhalli
		21	Bennegondlu
		22	Gollahalli
		23	Hukunda
		24	Madarahalli
		25	Doddakoppa
		26	Kotekoppa
		27	Kokkerehosahalli
		28	Harosivanhalli
		29	Muggur
		30	Mullahalli
		31	Arakoppa
		32	Margadaiyanagondi
		33	Kutugale
			Inam Villages.
		34	Chikkakoppa (Sarvamanya)
		35	Marlebekkoppa do
Kankanhalli	Satanur	1	Satanur
		2	Kemmale
		3	Katchonahalli
		4	Dalimba
		5	Nagarasanakote
		6	Chikka Alahalli
		7	Donturu
		8	Konanagondi
		9	Neereepura
		10	Halasuru
		11	Desavalli
		12	Yadegowdanahalli
		13	Anamanahalli
		14	Mudlasamekuppe
		15	Sasalapura
		16	Kanchanahalli
		17	Goravanapura
		18	Kabbalu
		19	Halasinamaradahalli
		20	Kabbalhosahalli
		21	Thotahalli
		22	Bommanahalli
		23	Atchalu
		24	Medanahalli
		25	Virupasandra
		26	Arehosahalli
		27	Chudahalli
		28	Gerahalli
		29	Attahalli
		30	Honnahalli
		31	Mallapura
		32	Somanathapura
		33	Kenganaiknahalli
		34	Suranahalli
		35	Kambasagara
		36	Alur
		37	Maradevanahalli
		38	Kabbal Forest
		39	Tailur Forest

Total number of villages in the Kankanhalli Taluk—

Government villages	248
Inam do	18
Total...	266

No. R. 15384—*Ft.* 195-05-3, *dated* 30*th*—31*st May* 1906.

The Government of His Highness the Maharaja of Mysore are pleased to declare, under the provisions of Section 4 of the Mysore Forest Regulation (XI of 1900), that it is proposed to constitute the area, the boundaries of which are described in the schedule below, a State Forest, under the provisions of the said Regulation :—

SCHEDULE.

District	Taluk, hobli and village	Approximate area	Name of block	Situation and boundaries.
Shimoga.	Channagiri, Channagiri-Ubrani hoblis.	16 square miles, 86 acres, 5 guntas.	Rangaiyanagiri Forest.	Situation :— A strip of forest land and hillocks situated in the Channagiri Taluk, east of the Kukvada-Ubrani State Forest, west of Channagiri-Ajjampur cart-track, south of Mavinhole and Rajagondanahalli villages and north of Hanumalapur, Khaggi, &c., villages. Boundaries :— *North.*—Starting from the point where the demarcation line of the Kukvada-Ubrani State Forest leaves the boundary between Mavinhole and Gaudaganahankalu villages to enter the latter village, the line runs east and north-east along the southern boundaries of Mavinhole and Rajagondanahalli villages to the north-west corner of Survey No. 59 of Halakanahal village. *East.*—Thence the line runs along the west side of Survey No. 59, the north sides of Nos. 57 and 67, the west sides of Nos. 67-66 and 65 the south side of Nos. 65 and 67 and the east side of No. 67 to the south-west corner of Survey No. 57; then along the south sides of Nos. 57, 62 and 61 to the north-west corner of No. 33; then along the west sides of Nos. 33, 32, 31, 26, 25 and 24, the west and south sides of No. 23, the west side of No. 20, west and south sides of old village site, the west sides of Nos. 19 and 18 to the north-west corner of No. 86 of Maravanji village, then the west sides of Nos. 86, 84, 78, 77 (tank)-76 and 75 till the point where it meets No. 49 of Medagondanahalli village on its north side; then the west side of No. 49, west and south sides of No. 50 to its south-east cerner; then the south-west side of No. 35 and west and south sides of No. 34 to the point where it meets No. 33 on its north side; then the north side of No. 33, north and west sides of No. 44, north side of No. 46, north-west side of No. 47, west, south and east sides of No. 48, south sides of Nos. 47, 46, 45 and 31 to the north-west corner of No. 28; the west sides of Nos. 28, 27, 26, 25, 24, 23 and 22 to the point where it meets No. 31 of Jammapura on its north-west side; then the west sides of Nos. 31, 30, 29, 28, 27, 26, 25 and 22, north and west sides of No. 20; the west and south sides of No. 19, west side of Nos. 17, 16 and 15; then the south side of No. 15 to the point where it meets Nos. 15 and 16; then its south side and the boundary between Jammapura and Kalkere villages to the south-east corner of No. 15, where it meets the boundary bandhs of Nos. 25 and 26 of Kalkere; then the west and south sides of Survey No. 26, west sides of Nos. 27 and 19 to the point where it meets No. 21 on its north-west side; then the west side of No. 21 to its south-west corner; then the north and west sides of No. 12, and west sides of Nos. 7 and 4 to the south-west corner of the last named number where it meets the bandhs of Masnikere Hanumalapura. *South.*—Thence the line runs along the northern boundary of Hanumalapura to the south-east corner of S. No. 9 of Kalkere village; then the east and north sides of the said No. 9, the north-east, north and west sides of No. 10 to the south-west corner of the same number where it meets the Hanumalapura boundary; then along the said village boundary to the south-east corner of No. 20 of Magyathanahalli where it meets the common bandh of Magyathanahalli, Hanumalapura and Kalkere villages; then the east side of Nos. 20 and 24 to the north-east corner of the last named No. 3; then the north and west sides of the said No. 24, north side of No. 27 to the point where it meets No. 4 of Chiksandi village on its north-east side; then the north-east and north sides of the same No. 4 to its north-west corner; then the north sides of Nos. 7 and 2 to the south-east corner of No. 55; then the east and north sides of No. 55, the north sides of Nos. 54 and 53 to the north-west corner of the last named number where it meets the north-east corner of Hakkihalli boundary; then the north-east and north-west sides of No. 33, west sides of Nos. 34 and 33, north side of Nos. 39 and 38, east and north sides of No. 36 to its north-west corner where it meets the Dodmalalu village boundary; then the west side of No 36 of Hakkihalli to its south-west corner; then along the boundary between Chikmalalu and Dodmalalu villages to the north-east corner of No. 1 of the *latter village; then the east* side of Nos. 2, 22 and 3, north and west sides

of No. 3, the west side of No. 2; north-west side of No. 1; north and west sides of No. 21, the west side of No. 18, north and west sides of No. 17, west sides of Nos. 10 and 9 to the south-west corner of the latter number where it meets the boundary between Dodmalalu and Khaggi villages; then along the said boundary to the demarcation line of Kukvada-Ubrani State Forest at the common bandh of Nos. 5, 6 and 7 of Dodmalalu village.

West—Then along the demarcation line of Kukvada-Ubrani State Forest to the starting point.

2. The Government of His Highness the Maharaja of Mysore are further pleased, under clause (*c*) of the said section, to appoint Mr. A. Ananda Rao, Extra Assistant Commissioner, to be the Forest Settlement Officer, who shall inquire into and determine the existence, nature and extent of any rights claimed by, or alleged to exist in favor of, any person in or over land comprised within such limits, or to any forest produce of such land, and to deal with the same as provided in Chapter II of the said Regulation, and the District Forest Officer of the Shimoga District, for the time being, to attend on behalf of Government to assist the Forest Settlement Officer in the inquiry.

3. The Government of His Highness the Maharaja of Mysore are further pleased, under the authority vested in them by Section 15 of the said Regulation, to appoint the Deputy Commissioner of the Shimoga District, for the time being, to be the Officer of the Revenue Department who shall hear appeals from the orders of the Forest Settlement Officer under Sections 10, 11, 12, 13 or 14 of the Regulation.

No. R. 15555—*R. M.* 534-05-5, *dated 6th June* 1906.

Under Section 6 of the Land Acquisition Regulation, No. VII of 1894, it is hereby declared that the lands described hereunder are required for a public purpose, *viz.*, for inclusion in the bed of the Mavathur tank; and under Sections 7 and 3 (*c*) of the said Regulation, the Assistant Commissioner in charge of Mudgere group of taluks is authorized to take order for the acquisition of the said lands:—

District / Taluk / Hobli	Name of khatedar	Survey No.	Dry, wet or garden	Extent now required: Extent	Boundaries: East	West	North	South
Tumkur / Kolala / Siraganahalli	1 Srikantiah, son of Subba Sastri ½. 2. Subbarayappa, son of Krishna Sastri ¼. 3. Venkatnaranappa, brother of Nanjunda Sastri ⅛. 4. Nanjunda Sastri ⅛ ...	...	Dry	A. g. 105 23	Bevinhalli and Golhalli village boundary, Dodballapur Taluk	Remaining portion of Siraganahalli village.	Mavathur.	Huraligere.

No. R. 14541—*L. R.* 666-05-3, *dated* 11*th May* 1906.

Under Section 6 of the Land Acquisition Regulation, No. VII of 1894, it is hereby declared that the land described hereunder is required for a public purpose, *viz.*, for improving the Honnali-Basavapatna road; and under Sections 7 and 3 (*c*) of the said Regulation, the Assistant Commissioner in charge of Honnali group of taluks is authorized to take order for the acquisition of the said land:—

District—Shimoga.
Taluk—Honnali.
Village—Benakanahalli.
Name of khatedar—Savantrava, wife of Bhima.
Survey No.—74.
Dry, wet or garden—Dry.
Total extent—8 acres and 38 guntas.
Assessment—Rs. 3-8-0.
Extent required—20 guntas.
Boundaries—
East—Survey No. 73.
West—Survey No. 75.
North—Survey No. 43.
South—Survey No. 77.

CIVIL APPOINTMENTS.

Heads of Departments and all other officers concerned are informed that Notifications in the Gazette are in future to be accepted as disposing of all references regarding leave, transfers, appointments, powers and other personal questions affecting Gazetted officers, as to which orders are gazetted by the Government in this Part of the Gazette, and that any subsidiary orders as to relief of their subordinates and the like, which such notifications necessitate, must be issued by them on receipt of the Gazette, as no other orders will be issued by Government.

No. J. 3390—*Pol.* 6-05-8, *dated 4th June* 1906.

The privilege leave of one month and twenty days granted to Mr. Tippu Sultan Ali Khan, Probationary Assistant Superintendent of Police, in Government Notification No. J. 1022—Pol. 6-6, dated the 9th October 1905, is hereby cancelled.

No. G. 6013—*G. M.* 161-05-10, *dated 5th June* 1906.

Under Article 188 of the Mysore Service Regulations, Mr. B. K. Venkata Varada Iyengar, Secretary to the Government in the General and Revenue Department, is granted privilege leave of absence for two months and twenty-five days with effect from the 4th June 1906, preparatory to his retirement.

No. 12422—*Med.* (218-05)-4, *dated 1st—5th June* 1906.

The two months' privilege leave granted to Mr. C. Appadurai Mudaliar, Assistant Surgeon, in Notification No. 10007, dated the 28th March 1906, is hereby extended by one month.

No. 12477—*Med.* (194-05)-7, *dated 1st—5th June* 1906.

Under Article 188 of the Mysore Service Regulations, Mr. T. S. Siddappa, Sub-Assistant Surgeon, is granted eight days' privilege leave in extension of the fifteen days' leave of the same description granted to him in Notification No. 11951—Med. (194-05)-5, dated the 21st May 1906.

No. 15376—*L. R.* (202-05)-6, *dated 30th May* 1906.

The three weeks' privilege leave granted to Mr. S. Krishnappa, Amildar of the Sorab Taluk, in Notification No. R. 12805—L. R. 202-05-4, dated the 4th April 1906, is hereby extended by ten days.

No. R. 15377—*L. R.* 637-05-4, *dated 30th May* 1906.

Under Article 188 of the Mysore Service Regulations, Mahomed Peer, Deputy Amildar of the Harihar Sub-Taluk, is granted privilege leave of absence for fifteen days, with effect from the date of availment.

2. Burli Krishna Rao, Head-Quarter Inspector of Police of the Chitaldrug District, will act as Deputy Amildar and 3rd Class Magistrate of the said sub-taluk during the above period or until further orders.

No. R. 15422—*L. R.* 134-05-9, *dated 1st June* 1906.

The leave on medical certificate granted to Mr. M. Narain Rao, Deputy Commissioner, in Notifications ending with that bearing No. 11056, dated the 24th February 1906, is hereby extended by another month.

No. B. Camp Mysore, dated 3rd June 1906.

Mr. B. K. Venkata Varada Iyengar delivered over and Mr. K. S. Chandrasekhara Aiyar received charge of the office of the Secretary to the Government of His Highness the Maharaja of Mysore in the General and Revenue Department in the afternoon of the 3rd June 1906.

No. J. 3359—*Cts.* 300-05-2, *dated 31st May* 1906.

Under the provisions of Section 357, Sub-Section (2), of the Criminal Procedure Code, Mr. Ananda Rao S. Sirsi, B.A., LL.B., Assistant Commissioner and First Class Magistrate of the Closepet group of taluks, is empowered to take down the evidence of witnesses in the English language.

The Petition Box kept at the Office of the General and Revenue Secretariat, Bangalore, will be cleared at 12 noon every day by the Secretary to Government, General and Revenue Department, and in his absence from Bangalore, by the Deputy Secretary.

By Order,
K. S. CHANDRASEKHARA AIYAR,
for *Secy. to Govt., Gen. & Rev. Dept.*

GEOLOGICAL.

No. 2490, *dated* 1*st June* 1906.

The Government of His Highness the Maharaja of Mysore are pleased to make the following addition to the rules for the grant of prospecting licenses and mining leases issued with Notification (Geological) No. 555—S., dated 2nd March 1904 :—

Rule 8, *line* 1.—After "block of land," add "not exceeding 12 square miles."

No. 2521, *dated* 4*th June* 1906.

The Government of His Highness the Maharaja of Mysore are pleased to direct that the following additions be made to the rules for the grant of prospecting licenses and mining leases in Mysore, published under Government Notification (Geological) No. 555—S., dated 2nd March 1904 :—

(1) *Rule* 10.—After the words "will be valid for one year" add the words "or such shorter period within which a mining lease is granted thereunder to the licensee."

(2) *Form of License, Clause* 1.—After the words "one calendar year from the date hereof" add "or such shorter period within which a mining lease is granted hereunder to the licensee."

(3) *Form of License, Clause* 15.—Add a fresh sentence at the end :—"When such mining lease has been granted to the licensee, this license shall immediately cease and determine."

By Order,
E. W. WETHERELL,
Offg. Secy. to Govt., Geol. Dept.

661.

The Mysore Gazette.

Vol. 41.] PUBLISHED BY AUTHORITY. [No. 23.

BANGALORE, THURSDAY, JUNE 7, 1906.

PART II.

Notifications by Govt. of India, Resident, Chief Court, &c.

FOREST DEPARTMENT.

IMPERIAL FOREST SCHOOL, DEHRA DUN.

Notification dated 1st June 1906.

Applications are invited before 15th July 1906, from natives of Mysore being *full graduates* in Arts for training in the Imperial Forest School at Dehra Dun, with a view to their subsequent employment as Forest Rangers in the State on salaries rising from Rs. 50 to Rs. 100 per mensem, provided their conduct and training continue to be satisfactory.

Candidates should submit certificates of physical fitness for out-door life, age and of respectability and moral character from heads of Colleges or individuals of position.

2. Selected candidates must appear in October next for the Entrance Examination of the Dehra Dun School, which will be held in the office of the Conservator of Forests at Bangalore, on passing which they will be called upon to undergo a probationary practical forest training of three and a half months under the orders of the Conservator, before joining the Forest School in April 1907.

3. While under this practical training, they will receive travelling allowance of Rs. 20 per mensem, and should they give satisfaction during this period, will be deputed to Dehra Dun and given—

(i) A monthly stipend which will not be more than Rs. 40 per mensem during the course of 23½ months which they have to undergo at the school ;

(ii) their actual travelling allowance to and from Dehra Dun.

4. The grant of this stipend will be held to constitute a lien on the candidate's services for a period of five years after leaving the school, and removal for misconduct within that time will be grounds for refund of the total stipend awarded, and for this, proper security will be demanded. On the other hand, Government will be under no obligation to employ the candidate after returning from the school, while it may discontinue the grant of stipend at any time during the school course *without assigning any reason for so doing.*

For further information regarding the rules, etc., of the school, applicants should address this office.

M. MUTHANNAH,
Conservr. of Forests in Mysore.

Notification No. 183, *dated 29th May* 1906.

The right of cutting and removing firewood in the undermentioned localities of the Kamasandra State Forest, Bowringpet Taluk, from 1st July 1906 to 30th June 1907, will be sold in public auction by the District Forest Officer, Kolar, in conjunction with an Assistant Commissioner deputed by the Deputy Commissioner at the Bowringpet travellers' bungalow on Monday the 25th June 1906 at 2 P.M. :—

Locality		Total ground area of the forest	Kinds of trees that may be cut	Remarks
Block No.	Coupe No.			
I	7	449	1. Chigre. 2. Nallabalasu. 3. Devadari. 4. Goravi. 5. Iji and fuel trees unfit for timber	
IV	7	326	Do do	
Whole Forest	...	...	Dead wood of all except the reserved kinds.	Worked coupes excepted.

2. The coupes will be put up separately or together, *en masse* or at so much per acre at the discretion of the officers holding the sale. The sale is subject to the confirmation of the Conservator of Forests in Mysore.

3. The officers holding the sale reserve to themselves the right to reject any or all the bids without assigning any reasons therefor.

4. Each bidder shall deposit a sum of Rs. 100 as earnest money before he is permitted to bid, which will be returned to him at the close of the sale if his bid be not accepted.

5. Within a week of the receipt of the notice confirming the sale, the purchaser shall credit one-half of the sale amount at the Bowringpet Taluk Treasury and shall execute an agreement binding himself to observe the conditions as per draft, which will be read out at the time of the sale. He shall pay the balance of the sale amount in two equal instalments on or before 5th October 1906 and on or before 5th January 1907, respectively.

6. If he fails to make any of the payments or to execute the agreement as mentioned in the above para, he shall forfeit his deposit of Rs. 100 and any other amount that he might have paid up to the date of his default and forego his claim to the lease, which will be resold at his risk without his participating in any profit that may accrue. All arrears that become due from the defaulter will be recovered as arrears of revenue.

7. All firewood paid for by the purchaser but which remains over uncut before the 30th June 1907 and all firewood cut and collected by the purchaser but which has not been removed beyond the limits of the State Forest before the said date, shall lapse to Government.

8. Reserved trees, trees marked and numbered as standards, seedlings or saplings under one foot in girth, and trees and shrubs yielding minor forest products shall not be cut nor injured by the purchaser or his employees.

9. The stools of trees cut shall not exceed three inches in height and shall be dressed on the coppice system.

10. Each cart-load of firewood under removal from the State Forest shall be covered by a pass granted by a Forest official appointed for the purpose. The said cart-loads and passes shall be presented for examination at Mutanur, Budikote, Kamasandra and such other place as may be assigned by the District Forest Officer.

11. No firewood shall be carted from or through any portion of the State Forest after sunset and before sunrise.

12. Neither the purchaser nor his employees shall convey or kindle any fire within 500 yards of the State Forest.

13. In all cases of complaints preferred by the purchaser the decision of the Conservator of Forests shall be final.

S. A. BAPU RAO,
Dt. Forest Officer, Kolar Dist.

Notice dated 24th May 1906.

In the notice dated the 14th May 1906, published at page 778 in Part II of the *Mysore Gazette*, dated 17th May 1906, instead of "2 tons. 36 lbs. 9 ozs." please read "2 cwts. 56 lbs. 9 ozs. or 9¼ maunds" against cardamum under the head "Quantity."

Y. SITARAMAIYA,
Dt. Forest Officer, Hassan Dt.

EDUCATION DEPARTMENT.

Notification D. No. 48, dated 25th May 1906.

Mensuration in Kannada by C. Kappanna, Tank Inspector, Nanjangud Taluk, is recommended for the use of candidates preparing for the Vernacular Upper Secondary Examinations in Mysore.

H. J. BHABHA,
Inspr.-Gen. of Education.

POLICE DEPARTMENT.

Dated 25th May 1906.

Descriptive roll of a person named Krishnappa, who died unclaimed in the Hospital at Santhe Sargur in Heggaddevankote Taluk on 8th May 1906 at 9-30 P. M. :—

Name	Krishnappa.
Caste	Nayar.
Age	About 45 years.
Residence	Palghat.
Height	5 feet, 6 inches.
Colour	Brown.

Marks of identification and other particulars :—

The deceased had a long face and nose and holes in the lobes of both ears. Tuft of hair on his head. A dupti of 9 cubits long and a check coat were found near him. It is ascertained that the deceased was living upon the profession of sawing trees in the village.

MAHOMED JAFFER,
Supt. of Police, Mysore Dt.

MISCELLANEOUS.

BANGALORE DISTRICT.

Notice dated 19th May 1906.

The public are hereby informed that on and after the 21st May 1906, the office of the Sub-Registrar of Bangalore will be held in Mr. Abdul Karim's bungalow opposite to the Reserve Police Lines, Fort, Bangalore.

It is hereby notified that the undermentioned Kayamgutta village will be sold by public auction on account of arrears of revenue due to Government at Halesampigehalli at 11 A.M., on the 26th June 1906. Halesampigehalli, Jigani hobli, Anekal Taluk, Bangalore District.

For further particulars, see page 803, Part II of the *Mysore Gazette*, dated 24th May 1906

It is hereby notified that the undermentioned Kayamgutta village will be sold by public auction on account of arrears of revenue due to Government at Lakshmipura at 11 A.M., on the 25th June 1906. Lakshmipura, Jigani hobli, Anekal Taluk, Bangalore District.

For further particulars, see page 802, Part II of the *Mysore Gazette*, dated 24th May 1906.

Notification dated 19th April 1906.

It is hereby notified that in satisfaction of arrears of land revenue due by the Inamdars of Jodi Narayanapura village in the Nelamangala Taluk for the year 1905-06, the said Jodi village of Narayanapura will be sold by public auction at Nelamanagla Taluk Office on the 25th June 1906.

For further particulars, see notification dated 19th April 1906, published in the *Mysore Gazette*, Part II, page 801.

D. DEVARAJ URS,
Dy. Comr.

IN THE COURT OF THE ASSISTANT COMMISSIONER AND 1ST CLASS MAGISTRATE, KOLAR GOLD FIELDS.

Property Form No. 45, *dated 9th April* 1906, *from Champion Reefs Station.*

A drum or thabala.

Notice is hereby given that the marginally noted property found lying by the road-side leading from Steven's Camp to Gwallapalli village on 22nd March 1906 and produced before Court on the 31st ultimo by the Police of Champion Reefs, will be sold and proceeds credited to Government if not claimed within six months from this date.

R. B. PLUMER,
1st Class Magistrate.

TUMKUR DISTRICT.

Notice dated 24th May 1906.

The attention of the public is invited to the notification of this department issued under the date 13th May 1906, regarding the sale of tangadi and kakke barks in the several taluks of the Tumkur District for 1906-08, published at page 777, Part II of the *Mysore Gazette,* dated 17th May 1906.

H. RAMIAH,
for *Dy. Comr.,*

Abstract Notification dated 15*th May* 1906.

The President of the Tumkur Town Municipal Board hereby invites tenders for the right to collect tolls at the rate of two annas per cart laden with goods and one anna per empty cart from 1st July 1906 to 30th June 1907.

2. The tenders should be addressed to the President of the Municipal Board of Tumkur. They will be opened by the President or the Vice-President in the District Office at 3-30 P.M. on the 12th June 1906.

3. For further particulars see original Notification published at pages 804-805 of the *Mysore Gazette* of the 24th May 1906.

K. DORASAMI IYER,
President.

Notification dated 26th May 1906.

It is hereby notified for general information that the contract for lac cultivation in the undermentioned State Forests and District Forests of the Tumkur District, during the years 1906-08, *i.e.*, from 1st July 1906 to 30th June 1908, will be sold by public auction at 12 noon on Monday the 18th June 1906, at Tumkur, by the District Forest Officer, Tumkur District :—

State Forests.

1. Devarayadurga.
2. Huliyurdurga Forests (including Handalkuppe).
3. Maddagiri and its extension (including Chikmadgiri)
4. Koratagere Forests (including Kolibal and Kavaragal).
5. Ranganathpura.

District Forests of the undermentioned Taluks.

1. Tumkur	4. Sira	7. Pavagada
2. Maddagiri	5. Gubbi	8. Kunigal
3. Chiknayakanhalli	6. Tiptur (including Turuvekere)	9. Koratagere Sub-Taluk.

N. B.—The State Forests will be sold Forestwar and District Forests Talukwar if found necessary.

2. The highest bidder shall, immediately after the close of the sale, pay a deposit of one-fourth of the contract amount in cash or currency notes. If he fails to do so, the contract will be resold at once at his risk and he will forfeit all gain and be liable for any loss that may arise from resale.

3. The sales shall be subject to the confirmation of the Deputy Commissioner, who reserves to himself the power of accepting or rejecting any bid without assigning any reason for doing so.

4. The successful bidder shall, within one week after the confirmation of the sale is intimated to him, pay into the Treasury half of the contract amount including the deposit plus local cess of one anna per rupee on this sum. Should he fail to do so, the deposit will be forfeited and the contract will be resold by the officer conducting the sale.

5. The sale effected under the above para will be at the risk of the defaulting bidder who will forfeit all gain, and, in the event of a loss by such resale, shall make good the deficiency between the total amount payable by him for the whole period under the terms of the original sale and the total amount payable by the successful bidder at the resale. If the deficit amount be not paid on demand it will be liable to be recovered as arrears of revenue.

6. The contractor shall sign an agreement binding himself to observe such conditions as are laid down by the District Forest Officer, and it should be executed within one week from the date on which confirmation of the sale is intimated to him; in default, the deposit will be forfeited and the right resold.

7. The balance of the contract amount with local cess of one anna per rupee on this sum shall be paid before the end of June 1907. In the event of this amount not being paid, the right to collect lac will be stopped and the whole of the balance of the lease amount and local cess will be recovered as arrears of revenue.

8. The marginally noted State Forests of the Gubbi Taluk do not come under the present sales.

1. Manchaldore.
2. Thirtharampura.

H. RAMIAH,
for *Dy. Comr.*

Memo dated 28th May 1906.

P. Sanjeeva Rao, Taluk Sheristadar and 3rd Class Magistrate, Tiptur Taluk (*vide* Government Notification No. R. 14921—L. R. 242-05-4, dated 18th May 1906), is hereby invested with the following additional powers to be exercised by him during Mr. C. V. Narayan Rao's absence on leave :—

1. Power to make orders prohibiting repetition of nuisances, under Section 143, C. P. C.
2. Power to make orders under Section 174, C. P. C.
3. Power to take cognizance of offences upon complaint, under Section 190, C. P. C.
4. Power to take cognizance of offences upon Police reports, under Section 190, C. P. C.

K. DORASWAMY IYER, *District Magistrate.*

MYSORE DISTRICT.

Notification dated 17th May 1906.

It is hereby notified for the information of the public, that, under the authority conveyed in Government Order No. 11423—L. B. (367-05)-4 of the 5th May 1906, the toll-gate at Panchavalli in the Hunsur Taluk will be shifted to Allurkatte from the 1st July 1906.

H. H. SPARKES,
President, Dist. Board.

HASSAN DISTRICT.

Abstract Notification dated 16th May 1906.

It is hereby notified for general information that the right of collecting tolls on the Belur bridge in the Hassan District for one year from 1st July 1906 to 30th June 1907, will be sold by public auction at the Belur Taluk Cutcherry at noon on Thursday the 31st May 1906, by the Senior Assistant Commissioner, Saklespur.

For further particulars, see original notification published at pages 807 and 808 of the *Mysore Gazette* dated 24th May 1906.

It is hereby notified for general information that the right of collecting tolls at the Marnahalli Ghat, Manjarabad Taluk, in the Hassan District, for twelve months from 1st July 1906 to 30th June 1907, will be sold by public auction at the Taluk Cutcherry at Saklespur at noon on Saturday the 2nd June 1906, by the Senior Assistant Commissioner, Saklespur.

For further particulars, see original notification published at pages 805 and 806 of the *Mysore Gazette* dated 24th May 1906.

M. A. NARAYANA IYENGAR,
for *Dy. Comr.*

SHIMOGA DISTRICT.

Abstract Notification dated 18th May 1906.

It is hereby notified for general information that the right of collecting tolls on carts entering the limits of the Shimoga town Municipality from 1st July 1906 to 30th June 1907 is to be sold by public auction in the office of the President, Shimoga Board, by the President of the Shimoga town Municipality or the Vice-President deputed for the purpose at noon on the 12th June 1906.

For further particulars see original notification published at pages 808 and 809 of the *Mysore Gazette,* dated 24th May 1906.

M. S. NARAYAN RAO,
President.

KADUR DISTRICT.

Abstract Notification dated 10th May 1906.

The right of collecting fees at the weekly markets in the Municipalities of Chikmagalur Tarikere and Yedahalli and in the Sakrepatna Union for the official year 1906-07, *i.e,* from 1st July 1906 to the 30th June 1907, will be sold by public auction by the Vice-President of the Chikmagalur Municipality and the Amildar of Tarikere, the Deputy Amildar of Yedahalli and the Amildar, respectively, at their offices at 11 A.M. on Monday the 11th June 1906.

N. B.—For further particulars *vide* Notification dated 10th May 1906, published at page 809, Part II of the *Mysore Gazette,* dated 24th May 1906.

M. CHENGIAH CHETTY,
President, Local Fund Board.

Abstract Notification dated 12th May 1906.

It is hereby notified that the Jodi Lakshmisagar village in the Sivane hobli of the Tarikere Taluk will be sold by public auction in the office of the Amildar of the Tarikere Taluk on 27th June 1906 on account of arrears of jodi due by Dod Devarappa.

For further particulars, see page 810 of the *Mysore Gazette* dated 24th May 1906.

V. KRISHNA RAO,
for *Dy. Comr.*

CHITALDRUG DISTRICT.

Notification dated 19th May 1906.

1. The right to collect tolls at the several gates in the Davangere Municipality from 1st July 1906 to 30th June 1907 will be sold by public auction in the Assistant Commissioner's Office at Davangere, by the Assistant Commissioner in charge of the Davangere group of taluks on the 12th June 1906.

2. The successful purchaser must collect tolls only at the rates noted in the annexed schedule and at no higher rates on the empty and laden carts that would pass through the toll gates from outside the limits of the Municipality.

3. The President reserves to himself the power of refusing or accepting the highest or any bid that may be offered without assigning any reason therefor.

4. The contract amount is payable in twelve monthly instalments due on or before the 10th of the following month. The contractor shall pay as soon as the sale is over, a deposit equal to two month's instalments for the due performance of the contract. He shall also furnish security for the regular payment of the monthly instalments.

5. If the deposit is not made and security is not furnished immediately after the close of the sale, the contract will be resold at the risk of the approved bidder. If default is made in the payment of instalments, interest at one pie per rupee per month will be levied till the date of payment and the contract will also be liable to be sold again at the discretion of the President and the deficit, if any, will be recovered from the contractor or his surety.

6. The contractor is also bound to keep an account showing the daily collections and it shall be open to inspection by Taluk and District authorities.

7. He shall also be bound to keep true accounts of traffic passing through the gates as specified in para 6.

8. The contractor will have the use of existing toll houses and gates and he will be required to keep them in good repair.

9. The contractor should conform generally to the rules published with the late Chief Commissioner's Notification No. 274, dated 4th November 1876, regarding the levy of tolls.

10. Any breach of the above rules on the part of the contractor or his servants will entail the cancellation of the contract.

SCHEDULE.

	Rs.	a.	p.
On every laden cart or carriage ...	... 0	2	0
Do empty cart or carriage ...	... 0	1	0

H. RAMANUJIENGAR, *President.*

667

Dated 20th May 1906.

It is hereby notified for general information that in consideration of deficient rainfall and consequent drought, Government have been pleased in their Proceedings No. 14086-8—Agri. 116-05-7, dated 1st May 1906, to remit in its entirety the Hulbanni amount for the year 1905-06 for the whole district and that under the sanction conveyed in the said Government Proceedings in the case of dry lands, the collection of khists in the undermentioned affected tracts of the district will be made in four instalments beginning from 1st May 1906 :—

Taluk.	*Hobli.*	*Village.*
Chitaldrug ...	Chitaldrug ...	1. Siddavanahalli.
		2. Ingaladahal.
		3. Kunchiganahal
		4. Pallavagere.
		5. Jampannaikenkote.
		6. Dyamavvanahalli.
		7. Gonoor.
		8. Kallenahalli
		9. Medakerepur.
		10. Chikkenhalli.
		11. Sajjankere.
		12. Mallapura.
		13. Pillekerenahalli.
Do ...	Hireguntanur ...	14. Vijapur.
		15. Talkunte.
		16. Ballekatte.
		17. Beeravara.
		18. Kariyammanahalli.
		19. Mallenahalli.
Do ...	Bharmasagar ...	20. Zelagodu.
		21. Adavigollarahalli.
		22. Ajjappanahalli.
		23. Bastihalli.
		24. Hullehal.
		25. Gowrammanahalli.
		26. Basavansivankere.
Do ...	Turavanur ...	27. Turavanur.
		28. Belagatta.
		29. Chikjagalur.
		30. Veeramedakerepura.
		31. Baggalrangavvanhalli.
		32. Ragalobanhalli.
		33. Bommakkanhalli.
		34. Hayakal.
		35. Siddavandurga.
Challakere ...	Challakere ...	The entire hobli.
	Naikenhatti ...	The entire hobli.
Hosdurga ...	Budihal ...	1. Budihal.
		2. Saderhalli.
		3. Kachapura.
		4. Vengalapura.
		5. Harenahalli
		6. Hulkenhalli.
		7. Heggere.
		8. Kadavagere.
		9. Kainadu.
		10. Nerlakere.
		11. Naigere.
		12. Somasandra.
		13. Agrahara.
Davangere ...	Davangere ...	1. Kodihalli.
		2. Dodbathi.
		3. Kadlabal.
		4. Arasapur.

Taluk.	*Hobli.*	*Village.*
Davangere	... Davangere	... 5. Obajjihalli. 6. Malgondanhalli.
Do	... Hadadi	... 7. Nagarasanhalli. 8. Kolenahalli. 9. Kanagondanhalli. 10. Jadaganhalli. 11. Mudihadadi. 12. Sirganahalli. 13. Ballur. 14. Batlagatte.
Jagalur	... Jagalur	... The entire hobli.
Harihar Sub-Taluk	... Harihar	... 1. Pamenahalli. 2. Ditur. 3. Kurubanhalli. 4. Karlahalli. 5. Hottiganahalli. 6. Kenchanahalli. 7, Chikkabidare. 8. Salaganahalli. 9. Sarathi.
Do	... Malebennur	... 10. Dhoolihole. 11. Kunibelalkere. 12. Ingalagondi. 13. Huleganhole. 14. Yalehole. 15. Adapur.

Notification dated 29th May 1906.

1. It is hereby notified for public information that the undermentioned Jodi village, which has been duly attached in satisfaction of the arrears of revenue due to Government (as shown in the subjoined statement) by the said Jodidar, will be sold by public auction at the place and on the date mentioned in the annexed statement. The sale will commence at 11 A.M. in the Chitaldrug Taluk Office, and the village will be knocked down to the highest bidder without reserve.

2. The purchaser will be required to deposit twenty-five per cent of the purchase money at the time of sale and where the remainder of the purchase money may not be paid within fifteen days, from the day of sale, the money so deposited shall be liable to forfeiture.

3. When such deposit shall not be made nor the purchase money paid up, the lands shall be re-sold at the expense and risk of the first purchaser.

4. Persons bidding at the sale may be required to state whether they bid on their own account or as agents, and in the latter case to deposit a written authority signed by their principals, otherwise their bids may be rejected.

5. The sale shall be stayed, if the defaulter or any other person acting on his behalf or claiming an interest in the land, tender the full amount of the arrears of revenue with the interest and other charges, before the property is knocked down or give satisfactory proof that the amount of arrears has been paid up or furnish security under Section 170 of the Mysore Land Revenue Code.

6. Purchaser having completed the payment of the purchase money will, as soon as the sale has been confirmed, be placed in immediate possession, and the village will be registered in the name of the purchaser, and a certificate of sale signed and sealed by the Deputy Commissioner, will be granted to him. It is to be distinctly understood that the Government are not responsible for errors of description or in estimated extent.

7. Provided, parties deeming themselves aggrieved by the sale shall be at liberty to appeal to the Government within ninety days from the date of sale and the purchase shall be conditional on the final order in such appeal.

SCHEDULE.

istrict	Taluk	Hobli	Village	Name of Jodidar	Estimated extent	Estimated gross rental or beriz	Arrears of Government revenue for which the village is to be sold	Date of sale	Place of sale
Chitaldrug	Chitaldrug	Bharmasagar	Jodi Kasavanahalli	Subbasastri	A. g. Dry 211 10		Rs. a. p. Arrears of Jodi amount ... 19 10 7 Notice fee ... 1 0 0 Local funds ... 3 7 8 24 2 3 Amount already recovered ... 5 0 0 Net amount due to Government ... 19 2 3	9th July 1906.	Chitaldrug Taluk Cutcherry.

NOTE.—The sale is free from all tenures, encumbrances and rights created by the Jodidar or any of his predecessors in title or in any wise subsisting against him.

Notification dated 30th May 1906.

1. It is hereby notified that in satisfaction of arrears of land revenue due by Hanumanthachar and other Inamdars of Jodi Hulegondi village, revenue defaulters, the undermentioned immovable property will be sold by public auction at Chitaldrug Taluk Office, Chitaldrug District, on the 19th July 1906. The sale will commence at 11 A.M., and the property will be knocked down to the highest bidder without reserve. The sale will be conducted by the Amildar of the Chitaldrug Taluk.

2. The amount of revenue payable by the purchaser on the property for the whole year is Rs. 34-2-3 as shown in the statement at foot.

3. Purchasers will be required to deposit twenty-five per cent of the purchase money at the time of sale, and where the remainder of the purchase money may not be paid within fifteen days from the date of sale, the money so deposited shall be liable to forfeiture.

4. When such deposits shall not be made nor the remainder of the purchase money paid up, the property shall be re-sold at the expense and risk of the first purchaser.

5. The sale shall be stayed, if the defaulters or any person acting on their behalf tenders the full amount of the arrears of revenue with the interest and other charges, provided such tender be made before the property is knocked down.

6. The sale of the property will not become absolute until confirmed by the Deputy Commissioner or some other person duly authorized to confirm the same.

7. Purchasers having completed the payment of the purchase money will, as soon as the sale has been confirmed by the Deputy Commissioner, be placed in immediate possession, and the property will be registered in the name of the purchaser, and a certificate of sale signed and sealed by the Deputy Commissioner will be granted to him. It is to be distinctly understood that the Government are not responsible for errors of description are in estimated extent.

8. Provided parties deeming themselves aggrieved by the sale shall be at liberty to appeal to the Deputy Commissioner within thirty days from the day of sale and also to appeal to Government against his order within the time prescribed by law, and the purchase shall be conditional on the final order in such appeal.

Particulars of land to be sold for arrears of revenue.

Taluk	Hobli	Village	Names of defaulters	Description of property: Buildings: Name of land or building	Buildings: Estimated value	Land: Number or name of land	Land: Dry, wet or garden	Land: Area	Land: Assessment	Amount of arrears due to Government including notice fees, etc.
								A. g.	Rs. a. p.	Rs. a. p.
Chitaldrug	Chitaldrug	Hulegondi	Jodidar Hanumanthachar and others	Entire village of Jodi Hulegondi.			Dry.	248 25	38 4 0	
							Amount of Jod		31 0 0	
							Local Fund ...		2 2 3	
							Notice fee ...		0 8 0	
							Isthihar fee ...		0 8 0	
							Total ...		34 2 3	34 2 3

Notification, dated 30th May 1906.

1. It is hereby notified that in satisfaction of arrears of land revenue due by Hanumantachar and other Inamdars of Jodi Agasanakallu village, revenue defaulters, the undermentioned immovable property will be sold by public auction at Chitaldrug Taluk Office, Chitaldrug District, on the 19th July 1906. The sale will commence at 11 A.M., and the property will be knocked down to the highest bidder without reserve. The sale will be conducted, by the Amildar of the Chitaldrug Taluk.

2. The amount of revenue payable by the purchaser on the property for the whole of the year is Rs. 70-6-9, as shown in the statement at foot.

3. Purchasers will be required to deposit twenty-five per cent of the purchase money at the time of sale, and where the remainder of purchase money may not be paid within fifteen days from the date of sale, the money so deposited shall be liable to forfeiture.

4. When such deposit shall not be made nor the remaining purchase money paid up, the property shall be re-sold at the expense and risk of the first purchaser.

5. The sale shall be stayed, if the defaulters or any person acting on their behalf, tenders the full amount of the arrears of revenue with the interest and other charges, provided such tender be made before the property is knocked down.

6. The sale of the property will not become absolute until confirmed by the Deputy Commissioner or by some other person duly authorized to confirm the same.

7. Purchasers having completed the payment of the purchase money will, as soon as the sale has been confirmed by the Deputy Commissioner, be placed in immediate possession, and the property will be registered in the name of the purchaser, and a certificate of sale signed and sealed by the Deputy Commissioner will be granted to him. It is to be distinctly understood that the Government are not responsible for errors of description or in estimated extent.

8. Provided, parties deeming themselves aggrieved by the sale, shall be at liberty to appeal to the Deputy Commissioner within thirty days from the day of sale, and also to appeal to Government against his order within the time prescribed by law, and the purchase shall be conditional on the final order in such appeal.

Particulars of land to be sold for arrears of revenue.

Taluk	Hobli	Village	Names of defaulters	Description of property						Amount of arrears due to Government including notice fees, etc.
				Building		Land				
				Name of land or building	Estimated value	Number or name of land	Dry, wet or garden	Area	Assessment	
								A. g.	Rs. a. p.	Rs. a. p.
Chitaldrug	Chitaldrug	Agasanakallu	Jodidar Hanumantachar and others	Entire village of Jodi Agasanakallu.			Dry ...	314 12	65 0 0	70 6 9
								Local Fund ...	4 6 9	
								Notice fee ...	0 8 0	
								Isthihar fee...	0 8 0	
								Total ...	70 6 9	

H. RAMANUJAIENGAR,
Dy. Comr.

Notification dated 28th May 1906.

Many of the culverts on district roads not being designed to carry the heavy loads of steam rollers or traction engines, the transport of such heavy engines on these roads is attended with serious risk. Any intention therefore to move such engines on these roads should be notified beforehand to the Executive Engineer, Public Works Department, of the District, and his permission should be obtained before the engines are allowed to move on the roads.

J. J. WHITELEY,
Superintending Engineer, Eastern Circle.

KOLAR DIVISION.

Dated 2nd June 1906.

Notice is hereby given that sealed tenders will be received at the office of the Executive Engineer, Kolar Division, up to 3 P.M. of 2nd July 1906, for constructing quarters for the staff of the new Hospital at Robertsonpet on the Kolar Gold Fields. An approximate estimate of quantities is given below. These quantities are not guaranteed. The work should be completed by the end of March 1907.

2. The plans, detailed estimate and conditions may be seen at the Executive Engineer's office at Kolar between the hours of 11 A.M. and 5 P.M.

3. Tenders should be submitted on printed forms which may be obtained from the Executive Engineer. The tenders should be accompanied by a statement in the form given below, showing the rates at which the different items specified will be executed.

4. Each tender must be accompanied by a deposit of Rs. ——in cash or Government Promissory Notes, as earnest money, and be superscribed "Tender for constructing quarters for the staff of the new Hospital at Robertsonpet on the Kolar Gold Fields," in default of which, tenders will be rejected.

5. The final acceptance of any tender will rest with the Superintending Engineer, who does not bind himself to accept the lowest or any tender or to assign any reason whatever for the rejection of any tender.

6. Within eight days of the acceptance of the tender, the successful competitor will be required to execute the usual contract bond; in default of which, his tender will be considered cancelled, and his earnest money will be forfeited.

7. The name of the successful competitor, whose tender has been accepted, will be posted on the notice board in the Executive Engineer's office in due course. No enquiries regarding the acceptance or rejection of a tender will receive any reply.

8. On acceptance of one of the tenders, the earnest money on rejected tenders will be returned.

Items of work	*Per*	*Quantity*
(1) *Constructing Matron's quarters.*		
Main building out houses and compound—		
Earthwork, excavation and filling	C. yd.	345
Concrete foundation	C. ft.	2,118
Stone in chunam, foundation	,,	2,800
Do basement	,,	1,836
Do superstructure	,,	5,450
Do do	,,	1,381
Arch work stone in chunam	,,	102
Chunam plastering	Sqr.	66·56
Whitewashing	,,	66·56
Pointing with chunam	,,	47·35
Roofing with 1st class Mangalore tiles with ridge tiles and teak reepers complete (ornamental ridge tiles for the main building, rest ordinary).	,,	4,145
Flooring with Mangalore square tiles over 3″ concrete and cement pointing	,,	14·09
Flooring with Cuddapah stone slabs over sand bed and cement pointing	,,	6·10
Stone slabs dressed	S. ft.	1,138
Cut stone pillars of front verandah with base and capital (1′ × 1′ × 6½′)	Each	11
Ordinary stone pillars in rear verandah (1 × ½′ × 6½′) with bed slabs	,,	4
Teakwood work with wood oiling	C. ft.	335·63
Teakwood doors panelled including frames, hinges, bolts, painting and complete ...	S. ft.	408
Windows inside glazed and outside panelled including frames, iron bars, painting, etc. ...	,,	288
Burnt brick in chunam coping over compound wall including plastering	R. ft.	88
Teakwood ventilators glazed including painting...	S. ft.	104
Do glazed circular ventilators ...	,,	28
Do. planking to shelves 1″ thick ...	,,	36
Cedarwood planking ½″ thick including wood oiling	Sqr.	13·45
Ornamental eaves-board including painting ...	R. ft.	361
Barge-boards to ends of gables with painting ...	Each	4
Finials, large...	,,	4
Do small	,,	12
Painting doors and windows	Lump sum.	
Ordinary eaves-board including painting ...	R. ft.	108
Flooring with gravel inside the compound ...	C. yd.	24
Drainage for kitchen and bath	Lump sum.	
Zinc sheets for valleys	R. ft.	100
Wooden finials, small	Each	2
Binding wall	Lump sum.	
(2) *Hospital Assistants' Quarters, two for two Hospital Assistants* (For one block)		
Main building and Latrine—		
Earthwork in excavating foundation	C. yd.	116
Do in filling basement with watering and tamping	,,	40
Concrete filling in foundation	C. ft.	933
Stone in chunam including bond stones ...	,,	1,853
Do basement do	,,	943
Do superstructure do	,,	4,509
Do do do	,,	763

Items of work	Per	Quantity
Arch work, stone in chunam	C. ft.	26
Stone slabs dressed	S. ft.	313
Do finely dressed	,,	174
Teakwood work wrought and put up, including wood-oiling	C. ft.	178·35
Roofing with 1st class Mangalore and ridge tiles, teak reepers 2″ × 1″ complete (main building ornamental ridge tiles, rest ordinary) ...	Sqr.	21·35
Terracing with brick on edge and concrete and three courses of flat tiles laid in mortar, in all 9″ in depth and finely plastered	,,	2·52
Plastering with chunam, interior	,,	49·80
Pointing with chunam, exterior	,,	26·88
Brick in chunam coping over compound wall including plastering	R. ft.	67
Teakwood door panelled including frames, hinges, bolts, painting, etc., complete for main building (3½ × 6½)	Each	3
Do do (3 × 6½).	,,	3
Teakwood windows inside glazed and outside panelled including frames, hinges, painting, iron bars, etc., complete 3 × 4½	Each	5
Do battened doors including frames, hinges, locks, bolts, painting and complete (3 × 6½)	,,	4
Do panelled windows inside glazed and outside panelled including frames, hinges, painting, iron bars, etc., complete to attach rooms (3 × 4½)	,,	2
Do glazed ventilators including frames ropes, brass fastenings, painting, etc., complete (2½ × 1½)	,,	1
Do glazed circular ventilators including frames, ropes, brass fastenings, etc., complete to main building, 2½′ diameter ...	,,	2
Whitewashing	Sqr.	48·94
Flooring with Cuddapah slabs with 3″ depth of concrete including cement-pointing complete ...	,,	11·24
Brick in chunam cornice (1 × 1) projection including plastering	R. ft.	43
Cut stone sring course	,,	40
Dressed stone coping with moulding, including pointing over parapet wall	,,	49½
Stone in mud foundation	C. ft.	73
Do basement	,,	14
Seats in latrine	Lump sum	
Ornamental finials, large	Each	2
Do small	,,	10
Eaves-boards, ornamental, including painting ...	R. ft.	247
Masonry drain	,,	51
Ventilating tiles	Each	6

(3) Nurses' quarters for three Native Nurses.

(For one block.)

Earthwork, excavation and filling	C. yd.	96
Concrete foundation	C. ft.	453
Stone in chunam, foundation and basement ...	,,	1,755
Do superstructure	,,	2,770
Burnt stone slabs dressed	S. ft.	208
Teakwood work wrought and put into complete including wood-oiling	C. ft.	55·22
Roofing with first class Mangalore tiles, teak reepers including ridge tiles set in mortar	Sqr.	11·14
Teakwood doors including frames, panelled shutters, iron fastenings including locks, wood-oiling, etc.	S. ft.	114
Teakwood windows including frames, panelled, shutters, iron bars, iron fastenings, including wood-oiling and painting, etc., complete ...	,,	44

Items of work	Per	Quantity
Teakwood ventilators including glass shutters, iron works, including wood-oiling and painting, etc.	S. ft.	36
Teakwood panks ¾″ for shelves	,,	9
Coping with stone in chunam, including plastering	R. ft.	57
Plastering with chunam	Sqr.	23·06
Pointing with chunam	,,	17·05
Flooring with Cuddapah slabs over 3″ concrete and cement pointing	,,	2·10
Flooring with Mangalore tiles over 3″ concrete and cement pointing ...	,,	2·15
Flooring with 3″ concrete and chunam plastering over	,,	61
Teakwood eaves-board ordinary	R. ft. 6″ wide.	110
Whitewashing, two coats	Sqr.	23·06
Drainage, etc., and other sundry works ...	Lump sum	
A wooden gate with iron fittings, etc., complete ...	...	...

(4) Servants' quarters, three (four Servants in each block).
(For one block.)

Main building—		
Earth work in excavating foundation ...	C. yd.	16
Do filling basement	...	6
Stone in chunam, foundation	C. ft.	421
Stone in chunam, basement	,,	168
Do , superstructure	,,	953
Do do	,,	201
Stone slabs, dressed	S. ft.	107
Teakwood work wrought and put up with wood-oiling	C. ft.	20·74
Roofing with 1st class Mangalore tiles and ordinary ridge tiles, teak reepers 2″ × 1″, etc., complete	Sqr.	4·34
Rough chunam plastering	,,	9·82
Pointing with chunam	,,	10·08
Gravelling including tamping	C. yd.	2
Coping with brick in chunam and plastering with chunam	R. ft.	39
Teakwood battened door, frame, hinges, locks, painting, etc., complete	S .ft.	86
Do windows do iron bars ...	,,	20
Do glazed ventilators including iron bars, ropes, painting, etc., complete	,,	5
Whitewashing	Sqr.	9·82
Teakwood eaves-board including painting ...	R. ft.	31
Latrine—		
Earthwork, excavating foundation	C. yd.	1
Stone in clay, foundation...	...	23
Do chunam, basement	C. ft.	11
Brick in clay, superstructure	...	33
Coping with brick in chunam and chunam plastering	R. ft.	.9
Plastering with chunam, rough	C. ft.	91
Flooring with granite stones and pointing with cement	Sqr.	27
Buckets with seats, platform and drains ...	Each.	1
End walls—		
Earthwork, excavating foundation	C. yd.	7
Stone in chunam, filling in foundation ...	C. ft.	180
Do basement	,,	80
Do superstructure	,,	492
Do do	,,	35
Pointing with chunam	Sqr.	5·51
Coping with brick in chunam and plastering ...	R. ft.	23
Teakwood work including wood-oiling ...	C. ft.	6·56
Roofing with Mangalore tiles over 2″ × 1″ teak reepers borders	Sqr.	·84

Items of work	Per	Quantity
Teakwood ordinary eaves including painting ...	R. ft.	56
Teakwood finials, large do ...	No.	2
Do small do ...	,,	4
V-shaped drains	R. ft.	153
Do with concrete foundation ...	...	65

(5) Kitchen and store attached to Hospital.

Earthwork, excavation and filling basement ...	C. yd.	126
Concrete foundation	C. ft.	1,126
Foundation with stone in chunam	...	1,595
Basement do	...	1,067
Superstructure do	...	4,971
Burnt stone slabs dressed	S. ft.	306
Dressed stone pillars with caps and bases ...	No.	5
Roofing with first class Mangalore tiles with ridge tiles, teak reepers, nails, etc., complete ...	Sqr.	26·66
Flooring with Cuddapah slabs over 3″ concrete and cement pointing	,,	13·63
Teakwood work including wood oiling ...	C. ft.	237·81
Teakwood planks 1″ thick	S. ft.	112
Ornamental eaves-board	R. ft.	271
Finials, large	No.	3
Do small	,,	8
Teakwood door panelled including frames, hinges, light oak painting and complete ...	S. ft.	79
Teakwood windows with pannelled shutters, iron bars, painting, etc., complete	,,	90
Teakwood circular glazed ventilators ...	Each	3
Zinc sheets for valleys	R. ft.	51
For finishing off the cap of the chimney with necessary woodwork, etc., complete ...	Lump sum.	
Plastering with chunam	Sqr.	44·13
Pointing with chunam	,,	40·37
Whitewashing	,,	44·13
Fire-brick in clay	C. ft.	85
Slab over steps	S. ft.	24½
Cuddapah slabs	Sqr.	0·40
Cement plastering ½″ thick	,,	0·61
Cast iron fittings for native cooking	Lump sum.	
Brick in chunam	C. ft.	641
Arch work, stone in chunam	,,	200
Purveyor's room—		
Earthwork	C. yd.	26
Concrete	C. ft.	230
Stone in chunam, foundation and basement ...	,,	573
Do superstructure	,,	1,561
Burnt stone slabs	S. ft.	72
Roofing	Sqr.	7·06
Flooring with Cuddapah slabs	,,	4·00
Teakwood work	C. ft.	79·22
Teakwood planks	S. ft.	36
Eaves-board	R. ft.	55
Finials, large	No.	1
Doors	S. ft.	26
Windows	,,	60
Ventilator	No.	1
Zinc gutters	R. ft.	34
Chunam plastering	Sqr.	13·26
Chunam pointing	,,	7·79
Whitewashing	,,	13·26

(6) Compound wall and wire-fence.

Compound wall—		
Earthwork excavation	C. yd.	333
Burnt stone in mud filling foundation ...	,,	8,934
Foundation filling with concrete where there is black cotton soil east and north	C. ft.	2,550
Burnt stone in mud, superstructure	,,	9,350
Pointing with chunam, basement	Sqr.	174·16

Items of work	Per	Quantity
Plastering with chunam	Sqr.	1·40
Coping with brick in chunam including plastering, etc., complete	R. ft.	2,041
Brick in chunam, gate pillars	C. ft.	102
Cornice to gate pillars, base and top with dental cornice and complete	No.	4
Teakwood gate shutters with fittings and fixing and painting, etc., complete	S. ft.	108
New wicket gates	Each	2
Wire-fencing—		
Burnt stone posts for gates as detailed including dressing, etc., complete	C. ft.	70
Burnt stone slab posts including dressing and making holes	S. ft.	4,387
No. 7 gauge plain wire	R. ft.	23,130
Railway fare for the same, etc.	Lump sum.	
Fixing charges, etc.	Do.	
Straining bolts with nuts	Each	60
Earthwork, excavating pits for slabs, etc.	C. yd.	59
Teakwood gate, big size 12' × 5½'	Each	3
Do small 8 × 5½	Do	1

K. KRISHNAIENGAR,
Executive Engr., Kolar Dn.

SHIMOGA DIVISION.

Proclamation dated 26th May 1906.

Whereas a banjar site, situated in the Municipality of Tirthahalli Town, in the khate of one Javali Mastan Sab, now deceased, having been ordered to be sold for arrears of Mohatarfa tax (Rs. 8-0-0) together with its notice fees and interest amounting to Rs. 10-1-6, was sold formally in public auction on 7th March 1906, and was knocked down to the highest bidder, Lovers D'Souza, for Rs. 25 and whereas the balance of rupees fourteen, annas fourteen and pies six that remains after deducting the amount of arrears, *viz.*, Rs. 10-1-6 from the sale amount of Rs. 25, has been held in deposit in the Tirthahalli Taluk Treasury, this is to notify that any legal heir to the deceased khatedar should appear in person or through a lawyer or agent with a power of attorney duly attested by a Magistrate, before this office at Shimoga, within six months from the date of this notification and claim the amount held in deposit after establishing his right to the same.

No application from any person after the said period will be taken in consideration and the amount in deposit will be credited to Government as unclaimed property.

K. CHANDY,
Assistant Commissioner.

MYSORE DIVISION.

Notice is hereby given that sealed tenders will be received at the office of the Executive Engineer, Mysore Division, up to 15th June 1906, for restoring Kagalwadi tank, Registered No. 48, Chamrajnagar Taluk. An approximate estimate of quantities is given below. These quantities are not guaranteed. The work should be completed by the end of March 1907.

2. The plans, detailed estimate and conditions may be seen at the Executive Engineer's office at Mysore between the hours of 11 A.M. and 5 P.M.

3. Tenders should be submitted on printed forms which may be obtained from the Executive Engineer. The tenders should be accompanied by a statement in the form given below, showing the rates at which the different items specified will be executed.

4. Each tender must be accompanied by a deposit of Rs. 300 in cash or Government Promissory Notes, as earnest money, and be superscribed "Tender for restoring Kagalwadi tank, Registered No. 48, Chamrajnagar"; in default of which, tenders will be rejected.

5. The final acceptance of any tender will rest with the Superintending Engineer, who does not bind himself to accept the lowest or any tender or to assign any reason whatever for the rejection of any tender.

6. Within eight days of the acceptance of the tender, the successful competitor will be required to execute the usual contract bond; in default of which, his tender will be considered cancelled, and his earnest money will be forfeited.

7. The name of the successful competitor, whose tender has been accepted, will be posted on the notice board in the Executive Engineer's office in due course. No enquiries regarding the acceptance or rejection of a tender will receive any reply.

8. On acceptance of one of the tenders, the earnest money on rejected tenders will be returned.

Estimate for repairing the damaged portion of Kagalwadi tank, Registered No. 48, Chamrajnagar Taluk.

Items of work	Per	Quantity
Bund R. L. 56·00—		
Earthwork	C. yd.	2,826
Turfing	S. yd.	12,958
Rough stone work, new	C. yd.	2,308
Old rough stone with fresh jelly...	"	659
Gravel backing	"	743
Gravel to top of bund	"	540
Waste-weir No. 1—		
Burnt brick in surki mortar	C. ft.	1,827
Burnt stone slabs (old)	S. ft.	522
Rough stone work, new	C. yd.	481
Do do old	"	524
Rough stone new, jelly packing	"	389
Waste-weir No. 2—		
Burnt brick in surki mortar	C. ft.	232
Burnt stone slabs, old	S. ft.	93
Rough stone work, new	C. yd.	117
Do do old	"	83
Waste-weir No, 3—		
Burnt brick in surki mortar	C. ft.	232
Burnt stone slabs, old	S. ft.	93
Rough stone work, new	C. yd.	84
Do do old	"	100

V. V. KARVE, for *Executive Engineer.*

BANGALORE CITY MUNICIPALITY.

Notice dated 4th June 1906.

With reference to this office notice dated the 17th May 1906, published in Part II of the *Mysore Gazette* dated the 31st idem, the public are informed that the following cross roads are not attached to any of the toll gates therein specified and the right to collect tolls on vehicles and animals entering the City through these cross roads will be separately disposed of. Tenders are accordingly invited for these on Monday the 11th instant at 2 P.M. The public are also informed that such of the toll gates or cross roads as are not disposed of by tenders will be sold in public auction on Monday the 11th instant at 4 P.M., in the Municipal Office subject to the conditions notified in the notice of the 17th May 1906. The gates and cross roads to be thus sold will be declared in a notice to be affixed on the notice board of the Municipal Office.

1. Kankanapalya cross road.
2. Bull Temple road behind Mr. Puttanna Chetty's house.
3. Cross road by the side of Messrs. Rickie & Co.'s Workshop.
4. Acharpalya cross to the west of Sankey's Reservoir.

Note.—Railway gate cross is attached to the Magadi road toll-gate.

A. S. NAGAVKAR,
President.

BANGALORE CENTRAL JAIL.

Notification dated 28th May 1906.

Notice is hereby given that sealed tenders will be received up to 10 A.M. on Saturday the 16th June 1906 by the Superintendent of the Bangalore Central Jail for the supply, by contract, of mutton required for the use of the said Jail for the period of one year from 1st July 1906 to 30th June 1907, both days inclusive.

Full details of supply required and conditions for tenders are published in the *Mysore Gazette* of 31st May 1906.

G. HUME WRIGHT,
Supt., Central Jail.

MYSORE JAIL.

The undersigned invites the attention of the public to the detailed notification dated 1[illegible] May 1906, published on page 790 in the *Mysore Gazette*, dated 17th May 1906, for the supp[illegible] of ration articles, etc., to the Mysore Jail during the year 1906-07.

T. S. NANJAPPA,
Ag. Superintendent.

GOVERNMENT CENTRAL BOOK DEPOT, BANGALORE.

Notification dated 23rd May 1906.

The undermentioned books are available for sale at the Central Book Depot, Bangalore:-

	Rs.	a.	p.
Kannada Balabodhe, Part I	0	1	0
Do Brief History of Mysore	0	2	6
Savitre Charitre	0	2	0

S. ABDUL HAI, *Curator.*

MYSORE GOVERNMENT CENTRAL PRESS.

Notice dated 29th May 1906.

Notice is hereby given that the right of collecting the manure and removing the [illegible] from the latrines of the Government Press will be sold by public auction on 20th June [illegible] to the highest bidder for a period of three years commencing from 1st July 1906 to 30th [illegible] 1909.

C. H. YATES, *Supt., Govt. Press.*

ARCHÆOLOGICAL DEPARTMENT.

Now Ready,

EPIGRAPHIA CARNATICA, VOL. IX,

being

Inscriptions in the Bangalore District,

BY B. LEWIS RICE, C.I.E., M.R.A.S.,

Containing 1069 inscriptions, with Roman Text, Translations, Introduction, and Illustrations. Full cloth, demy 4to. Price Rs. 12-8-0.

Apply to the Curator, Government Book Depot, Fort, Bangalore.

OFFICE OF THE COMPILER, "MYSORE GAZETTE."

NOTICE.

RATES OF SUBSCRIPTION, &c.

What edition	Period	Subscription in Mysore		Postage for place out of Mysore	
		Rs.	a.	Rs.	a.
English *or* Kanarese edition ...	12 months	3	8	1	12
Ditto	6 ,,	1	12	0	14
Ditto	3 ,,	0	14	0	7
English *and* Kanarese editions	12 ,,	7	0	3	8
Ditto	6 ,,	3	8	1	12
Ditto	3 ,,	1	12	0	14
Single copy of current year's Gazette, exclusive of Regulations and orders	...	0	8	Exact cost.	
Prices for copies of previous years can be ascertained on application.	...	...		...	

Under Government Notification No. 155, dated 2nd July 1891, the Kanarese portion of the *Mysore Gazette* will be supplied to Shanbhogs and Patels within the Province at *half* of the above rates on production of certificate from Amildar of the taluk to the effect that such applicant is *bonâ fide* on duty at the time.

Under Government Order No. 24205-6—G. 6200, dated 21st June 1895, the above privilege is extended to Nad Patels also.

C. H. YATES,
Compiler, Mysore Gazette.

Daily Means of Observations for the Week Sunday 20th to Saturday 26th May 1906.

No.	BANGALORE	Sunday 20	Monday 21	Tuesday 22	Wednesday 23	Thursday 24	Friday 25	Saturday 26
1	Barometer red. to 32° F.	26·834	26·826	26·838	26·817	26·807	26·799	26·808
2	Daily Barometric range	·126	·149	·140	·131	·108	·105	·111
3	Mean Dry Temperature in shade	84·4	84·9	85·1	84·0	84·1	84·0	82·6
4	Maximum do	96·4	98·4	91·0	97·9	98·8	98·7	96·4
5	Minimum do	72·5	72·4	70·5	70·7	70·7	69·5	68·9
6	Daily range of do	23·9	26·0	20·5	27·2	28·1	29·2	27·5
7	Mean Wet Temperature in shade	67·6	69·0	68·0	69·3	67·3	67·3	67·7
8	Minimum do	63·9	64·6	63·8	67·7	65·0	64·4	63·3
9	Pressure of Aqueous Vapour	·536	·558	·553	·539	·478	·448	·519
10	Humidity	47	46	55	46	40	37	46
11	Wind Vely. in Miles p. day to 8 A. M	216	215	207	229	222	236	261
12	Mean Wind Direction	W N W	W b N	W b N	W b N	N W b W	N W b W	W
13	Rainfall in inches to 8 A.M.	0	0	0·05	0	0	0	0
14	Total Rainfall from 1st January	2·98	2·98	3·03	3·03	3·03	3·03	3·03
15	Per cent of Cloudy Sky	3	17	80	7	0	13	0
16	Character of Weather	Distant lightning	Distant thunder and lightning	Thunder storm	Distant thunder and lightning	Distant thunder and lightning	Fine passing clouds	Fine clear weather

2 M

679

680

MYSORE GOVERNMENT METEOROLOGICAL DEPARTMENT.

Daily Means of Observations for the Week Sunday 20th to Saturday 26th May 1906.

No.	MYSORE	Sunday 20	Monday 21	Tuesday 22	Wednesday 23	Thursday 24	Friday 25	Saturday 26
1	Barometer red. to 32° F.	27·327	27·316	27·339	27·311	27·298	27·292	27·314
2	Daily Barometric range	·137	·153	·166	·137	·120	·130	·104
3	Mean Dry Temperature in shade	83·9	84·9	77·6	83·0	84·8	83·1	80·5
4	Maximum do	95·1	97·8	88·9	95·2	98·0	97·5	93·2
5	Minimum do	73·2	73·3	66·7	71·3	71·6	69·6	68·8
6	Daily range of do	21·9	24·5	22·2	23·9	26·4	27·9	24·4
7	Mean Wet Temperature in shade	71·7	71·6	72·0	72·2	71·6	69·5	70·4
8	Minimum do	66·6	69·8	66·7	70·2	69·8	67·6	66·8
9	Pressure of Aqueous Vapour	·660	·623	·749	·663	·620	·560	·621
10	Humidity	53	52	69	59	52	51	56
11	Wind Vely. in Miles p. day to 8 A.M.	320	306	202	237	245	274	320
12	Mean Wind Direction	W b N	N W b N	W b N	W b S	W b S	W b S	W
13	Rainfall in inches to 8 A.M.	0	0	1·21	0	0	0	0
14	Total Rainfall from 1st January	4·09	4·09	5·30	5·30	5·30	5·30	5·30
15	Per cent of Cloudy Sky	37	30	70	30	13	43	27
16	Character of Weather	Fine passing clouds	Fine passing clouds	Thunder storm	Fine passing clouds	Fine passing clouds	Fine passing clouds	Strong wind

MYSORE GOVERNMENT METEOROLOGICAL DEPARTMENT.

Daily Means of Observations for the Week Sunday 20th to Saturday 26th May 1906.

No.	HASSAN	Sunday 20	Monday 21	Tuesday 22	Wednesday 23	Thursday 24	Friday 25	Saturday 26
1	Barometer red. to 32° F.	26·810	26·788	26·822	26·785	26·779	26·764	26·776
2	Daily Barometric range	·108	·124	·168	·096	·081	·080	·086
3	Mean Dry Temperature in shade	79·8	80·4	73·2	78·8	80·0	79·2	77·3
4	Maximum do	94·2	95·4	82·7	90·8	96·7	94·9	90·0
5	Minimum do	67·6	68·1	64·5	68·2	66·9	66·0	65·8
6	Daily range of do	26·6	27·3	18·2	22·6	29·8	28·9	24·2
7	Mean Wet Temperature in shade	70·1	71·7	68·3	72·2	70·0	68·9	69·3
8	Minimum do	64·6	66·1	64·3	67·3	66·1	65·2	64·4
9	Pressure of Aqueous Vapour	·655	·671	·703	·710	·615	·571	·616
10	Humidity	58	58	82	65	55	52	57
11	Wind Vely. in Miles p. day to 8 A.M.	80	107	101	89	112	121	119
12	Mean Wind Direction	W N W	W b S	S W b S	W	S W b W	W b N	W
13	Rainfall in inches to 8 A. M.	0	0	0	0·76	0	0	0
14	Total Rainfall from 1st January	2·09	2·09	2·09	2·85	2·85	2·85	2·85
15	Per cent of Cloudy Sky	43	47	83	3	23	37	20
16	Character of Weather	Fine passing clouds	Fine passing clouds	Cloudy	Thunder storm	Fine passing clouds	Fine passing clouds	Fine passing clouds

631

MYSORE GOVERNMENT METEOROLOGICAL DEPARTMENT.

Daily Means of Observations for the Week Sunday 20th to Saturday 26th May 1906.

No.	CHITALDRUG	Sunday 20	Monday 21	Tuesday 22	Wednesday 23	Thursday 24	Friday 25	Saturday 26
1	Barometer red. to 32° F.	27·436	27·402	27·412	27·392	27·385	27·373	27·376
2	Daily Barometric range	·132	·136	·140	·126	·116	·124	·122
3	Mean Dry Temperature in shade	84·0	85·3	85·5	85·2	84·8	83·6	83·7
4	Maximum do	96·2	98·2	96·2	98·2	99·5	98·4	96·4
5	Minimum do	71·9	72·9	75·1	72·3	70·8	69·4	71·8
6	Daily range of do	24·3	25·3	21·1	25·9	28·7	29·0	24·6
7	Mean Wet Temperature in shade	69·8	70·0	72·2	70·8	70·1	71·0	70·9
8	Minimum do	64·0	66·4	68·0	67·9	66·8	66·7	65·8
9	Pressure of Aqueous Vapour	·619	·578	·678	·603	·555	·623	·645
10	Humidity	53	48	55	50	45	55	55
11	Wind Vely. in Miles p. day to 8 A. M.	206	255	249	235	268	307	314
12	Mean Wind Direction	W b N	W N W	W b S	N W b W	W b N	W b N	W b N
13	Rainfall in inches to 8 A. M.	0	0	0	0	0	0	0
14	Total Rainfall from 1st January	2·47	2·47	2·47	2·47	2·47	2·47	2·47
15	Per cent of Cloudy Sky	3	40	53	0	0	0	40
16	Character of Weather	Fine clear	Fine passing clouds	Fine passing clouds	Fine clear	Fine clear	Fine clear	Fine passing clouds

Dated 2nd June 1906.

J. COOK, *Director of Meteorology.*

6882

Abstract Statement of Plague Cases and Deaths in the Mysore Province for the week ending Friday the 1st June 1906.

Place	During the week ending 1st June 1906		During the week ending 25th May 1906		Figures for the corresponding week of last year		Number of infected villages
	Attacks	Deaths	Attacks	Deaths	Attacks	Deaths	
Bangalore City	1	...	...	...	...	...	...
Mysore City	...	...	...	...	...	...	...
Bangalore District	1	..	...	...	4	3	1
Mysore District	3	2	...	...	...	...	1
Kolar District (excluding Gold Fields)	...	...	...	...	...	...	...
Kolar Gold Fields	...	...	...	...	...	...	..
Tumkur District	...	...	...	...	...	...	...
Hassan District	3	2	1	...	...	...	1
Chitaldrug District	...	....	...	...	...	...	...
Kadur District	4	4	...	..	...	...	2
Shimoga District	...	...	....	...	2	2	...
Total ...	12	8	1	...	6	5	5

T. S. NANJAPPA,
for *Sr. Suran. & Sany. Comr., M. G.*

2 G

684

The Mysore Gazette.

VOL. 41.] PUBLISHED BY AUTHORITY. [No. 23.

BANGALORE, THURSDAY, JUNE 7, 1906.

PART IV

OFFICIAL PAPERS.

Season Report for the Week ending with the 22nd Saturday in 1906 (*2nd June* 1906).

District and Station.	Rainfall up to 8 A.M. on Saturday. This week.		Last ten years' average for the corresponding week.		Up to the end of the week from 1st January 1906. This year.		Average of past ten years.		Excess (+) or defect (—) of column 4 compared with column 5.		Price of food grains in seers per rupee and market fluctuations in prices of food grains.			
1	2		3		4		5		6		7			
	I.	c	I.	c.	I.	c.	I.	c.	I.	c.		This week.	Past week.	Past ten years fortnightly average.
												Seers	Seers.	Seers.
BANGALORE.														
Bangalore C. & M. Station ...	...	60	...	...	...	60	...	...	..	...				
„ City & Taluk...	...	34	1	17	3	33	7	2	— 3	69	Rice, 2nd sort.	6·50	6·50	9·15
Hoskote ...	...	...	1	10	1	22	6	62	— 5	40				
Dodballapur ...	...	2	..	99	1	45	7	9	— 5	64	Ragi	16·00	16·00	21·81
Nelamangala ...	1	30	...	80	2	60	6	53	— 3	93	Kulthi	10·50	10·75	...
Kankanhalli ...	...	86	1	6	4	22	7	82	— 3	60	Kadale	8·00	8·00	10·75
Magadi ...	..	16	...	94	..	35	5	52	— 6	17				
Channapatna ...	...	..	.	70	3	92	7	46	— 3	54				
Anekal ...	...	78	1	83	4	37	8	31	— 3	94				
Devanhalli ...	...	...	...	98	1	4	6	86	— 5	82				
Closepet ...	...	...	1	10	4	61	7	86	— 3	25				
District average...	...	35	1	7	2	70	7	21	— 4	51				
KOLAR.														
Kolar ...	...	20	...	50	1	38	5	38	— 4	...				
Bowringpet ...	...	...	...	80	2	6	5	26	— 3	20	Rice, 2nd sort.	7·00	7·00	9·40
Chintamani ...	...	4	...	47	1	4	4	57	— 3	53				
Mulbagal ...	...	20	...	87	2	32	3	92	— 1	60	Ragi	15·00	15·00	24·20
Sidlaghatta ...	..	...	1	15	...	36	5	28	— 4	92	Kulthi	12·00	12·00	...
Chikballapur ...	...	...	1	2	5	7	6	83	— 1	76	Kadale	9·00	9·00	9·20
Bagepalli ...	...	...	...	65	1	76	2	92	— 1	16				
Goribidnur ...	...	7	1	17	1	52	4	33	— 2	81				
Malur ...	..	1	1	16	2	62	5	80	— 3	18				
Srinivaspur ...	...	...	1	40	2	7	5	74	— 5	67				
Gudibanda ...	...	...	...	82	1	97	3	59	— 1	62				
District average...	...	5	..	91	2	2	4	87	— 2	85				
TUMKUR.														
Tumkur ...	..	...	...	87	1	82	7	13	— 5	31				
Maddagiri ...	...	...	...	83	1	8	4	32	— 3	24				
Chiknayakanhalli ..	1	5	..	78	2	80	6	90	— 4	10	Rice, 2nd sort.	7·00	7·50	9·30
Sira ...	...	...	...	76	1	81	5	39	— 3	58				
Gubbi ...	...	11	...	84	1	89	5	17	— 3	28	Ragi	13·00	16·00	25·90
Tiptur ...	...	10	1	29	..	77	7	6	— 6	29	Kulthi	11·50	12·00	...
Pavagada ...	...	...	..	54	...	..	3	54	— 3	54	Kadale	7·00	8·00	9·60
Kunigal ...	...	32	1	7	3	79	4	79	— 1	..				
Koratagere ...	...	...	..	93	1	30	4	49	— 3	19				
Turuvekere ...	...	30	1	15	2	32	5	23	— 2	91				
District average...	...	19	..	91	1	76	5	40	— 3	64				

District and Station.	Rainfall up to 8 A. M. on Saturday.					Price of food grains in seers per rupee and market fluctuations in prices of food grains.			
	This week.	Last ten years' average for the corresponding week.	Up to the end of the week from 1st January 1906.						
			This year.	Average of past ten years.	Excess (+) or defect (—) of column 4 compared with column 5		This week	Past week.	Past ten years' fortnightly average.
1	2		3		4	5	6	7			
	I. c.		I. c.		I. c.	I. c.	I. c.		Seers.	Seers	Seers.
MYSORE.											
Mysore ...	... ...		... 82		6 67	7 12	+0 45				
Chamrajnagar ...	... 68		1 30		2 91	10 24	—7 33				
Seringapatam ...	... ..		1 ...		3 88	5 98	—2 10	Rice, 2nd sort.	8·00	8·00	10·17
Hunsur ...	... ..		... 49		3 46	7 80	—4 34	Ragi	14·00	13·50	21·44
Yedatore ..	... ...		1 38		3 78	6 91	—3 13	Kulthi	12·00	12·00	...
Heggaddevankote ...	... ...		.. 79		3 64	11 83	—8 19	Kadale	9·00	9·00	10·24
Gundlupet ...	.. ..		1 10		5 3	8 3	—2 ...				
Nanjangud ...	... 20		... 87		2 81	7 51	—4 62				
T.-Narsipur ..	... 17		1 19		3 83	8 33	—4 52				
Malvalli ...	... 36		1 37		3 41	6 11	—2 70				
Mandya ...	... ...		1 47		4 54	6 77	—2 23				
Krishnarajpete ..	... ..		1 34		4 ..	7 60	—3 60				
Nagamangala ...	.. ...		... 12		5 82	5 43	+0 39				
District average...	... 11		1 2		4 14	7 67	—3 53				
HASSAN.											
Hassan ...	... 10		... 83		3 6	7 15	—4 9				
Man arabad (Saklespur)	... ...		.. 90		4 75	7 52	—2 79				
Arkalgud ..	.. ...		... 79		4 47	6 84	—2 37				
Belur ...	... 50		... 68		4 98	7 31	—2 33	Rice, 2nd sort.	8·50	7·50	10·35
Channarayapatna ...	... ...		1 9		5 34	6 29	—0 95				
Arsikere ...	... ...		... 79		1 51	6 7	—4 46	Ragi	16·00	16·00	24·26
Hole-Narsipur ...	... ...		.. 77		5 41	6 4	—0 93	Kulthi	10·50	10·00	...
Alur ..	... ...		... 54		2 69	6 7	—4 18	Kadale	8·50	8·00	9·85
District average...	... 8		. 80		4 3	6 80	—2 77				
SHIMOGA.											
Shimoga ...	... ...		... 69		4 74	5 52	—0 78				
Channagiri ...	.. ...		... 53		1 87	4 72	—2 85	Rice, 2nd sort	7·50	7·20	11·99
Honnali ..	... 2		... 77		2 7	5 72	—3 65				
Shikarpur ...	... ...		... 50		... 38	4 68	—4 31	Ragi	13·00	13·30	28·80
Sorab ...	.. 3		.. 42		.. 55	3 66	—3 41	Kulthi	9·50	10·38	...
Sagar ...	... 3		... 76		2 57	4 40	—1 83				
Nagar (Kallurkatte) ..	... ...		... 39		.. 91	3 35	—2 44				
Tirthahalli ...	... 1		... 51		1 64	4 64	—3 ...				
Kumsi ...	... ...		.. 65		1 41	5 10	—3 69				
District average...	... 1		. 58		1 79	4 64	—2 85				
KADUR.											
Chikmagalur ..	... 27		1 22		3 54	7 72	—4 18				
Kadur .	... ...		.. 59		1 64	5 13	—3 49	Rice, 2nd sort	7·00	7·00	10·40
Tarikere ...	... ..		.. 55		3 4	6 79	—[illegible] 75				
Koppa .	... ..		.. 41		5 17	5 29	—0 12	Ragi	14·00	14·00	24·10
Mudgere ...	... ...		1 5		3 68	8 23	—4 55	Kulthi	9·00	9·00	...
Yedahalli ..	.. ..		... 47		2 38	6 31	—3 93	Kadale	8·00	8·00	10·00
Sringeri ..	... ...		... 60		4 41	5 76	—1 35				
District average .	.. 4		... 70		3 41	6 46	—3 5				
CHITALDRUG.											
Chitaldrug .	... ...		... 42		2 45	3 73	—1 28				
Challakere ...	.. ..		78		... 12	3 57	—3 45	Rice, 2nd sort	7·50	7·50	10·45
Hiriyur ..	... ...		... 64		1 77	3 89	—2 12				
Holalkere ...	... ...		. 66		1 38	4 44	—3 6	Ragi	14·00	14·00	27·10
Davangere ...	... ..		.. 87		2 46	4 68	—2 22	Kulthi	10·00	11·00	...
Molakalmuru ...	... 11		... 59		1 28	4 99	—3 71	Kadale	8·00	8·00	10·50
Jagalur ..	.. ...		1 21		1 13	5 13	—4 ..	Cholum	12·00	13·00	24·00
Hosdurga ..	... ...		... 95		1 71	3 87	—2 16				
Harihar ..	... ...		.. 78		6 39	4 8	+2 31				
District average...	.. 1		... 77		2 9	4 26	—2 17				
Provincial average..	... 10		... 84		2 74	5 91	—3 17				

Note—Rice (husked)—Oryza Sativa.
Ragi—Eleusine Corocana.
Kulthi—(Horse gram) Dolichos Biflorus.
Cholum—Sorghum Vulgare.
Kadale—(Bengal gram) Cicer Arietinum.

DISTRICT REPORTS.

8. Markets how supplied.

9. Progress of agricultural operations, state of standing crops, prospects and probable outturn of harvests, serious damage done to crops by insects or other natural calamities.

10. Prospects of season, tracts in which the rainfall has been insufficient, areas affected by scarcity number of people under relief, and state of food stocks.

11. Public health.

12. Remarks as to the condition of agricultural stock, failure of pasturage of fodder, etc.

BANGALORE CIVIL AND MILITARY STATION.

		Normal.	*Current.*	
Prices of food grains—	Rice ...	10 to 11	6½ to 7	seers per rupee.
	Ragi ..	25 to 30	15 to 16	

Agricultural operation—Ploughing, but this is not progressing for want of rains.

Cattle are in good condition. Water and fodder sufficient.

BANGALORE CITY AND TALUKS.

8. Market well supplied.

9. Standing crops are in good condition, except that sessamum in some parts of Kankanhalli and sugar-cane in some parts of Devanhalli are reported to be suffering for want of water. In parts of Nelamangala, Kankanhalli and Anekal, ploughing is begun. In parts of Anekal Vysakhi paddy is reported to be harvested, and in some parts of Closepet sowing is commenced. Sugar-cane and paddy in Dodballapur and sugar-cane in Bangalore are harvested.

10. Prospects of the season moderate. Rain is wanted throughout the district.

11. Public health generally good. Fever prevails in Hoskote town, and small-pox in some parts of Hoskote, Anekal and Devanhalli.

12. Cattle generally healthy. Dry fodder and water are available for the present. A well is reported to have been sunk in the tank bed of Thimmasandra in the Dodballapur Taluk.

KOLAR.

8. Market fairly supplied, but prices are high.

9. There was no sowing during the week throughout the district. Vysakhi paddy is being harvested in some parts of Sidlaghatta and Bagepalli and cholum in the Bagepalli. Sugar-cane is reported to be withering in Kolar, Mulbagal, Bagepalli and Gudibanda.

10. Prospects of the season not encouraging. Rains are anxiously expected. Food stocks are available in moderate quantities.

11. Public health generally good.

12. The condition of cattle is generally poor. The supply of fodder is considerably diminishing, and pasture is not available except in very few parts. In some parts of Bagepalli, foot and mouth disease is subsiding in parts of Bagepalli. Difficulty for water is experienced.

TUMKUR.

8 Market well supplied.

9. Sugar-cane in Tumkur and Gubbi; paddy in Maddagiri, Sira, Pavagada, Koratagere and Turuvekere, and cholum in Sira are being harvested. Cholum in Gubbi and nat-ragi in Pavagada are sown. Standing sugar-cane crop in Tumkur; sugar-cane and paddy in parts of Maddagiri, Sira, Gubbi, Koratagere and Turuvekere are withering. Elsewhere they are in fair condition. The probable outturn of crops harvested is as follows :—

Maddagiri—Paddy 4 to 12 annas.

Sira—Paddy 4 to 8 annas, cholum 2 to 4 annas

Pavagada—Paddy 2 annas.

Turuvekere—Paddy 4 to 8 annas.

10. Prospects of the season are not encouraging. Food stocks are available for the present. Supply of water in wells is diminishing all over the district. In Maddagiri and Turuvekere the number of people employed on ordinary expansion of public works is 139 and 40 respectively.

11. Public health generally good, except that fever is prevalent in parts of Kunigal.

12. Cattle are deteriorating in condition In Maddagiri, Chiknayakanhalli and Sira, date leaves are used as fodder for cattle. The leaves of avenue trees also are used as fodder wherever it is found necessary.

MYSORE.

8. Market well supplied.

9. Sugar-cane and cholum in parts of Seringapatam; cholum, til, togari, castor, ballar, mulberry, cotton, ragi, kar-paddy, sugar-cane, black gram, and kulthi in parts ofNanjangud; cholum, castor, til, ragi, togari and ballar in parts of Gundlupet; sugar-cane, mulberry, cholum, til and togari in parts of Malvalli; sugar-cane, black and green grams, cholum, til, tadagani and togari in parts of Krishnarajpete, and sugar-cane in parts of Nagamangala are reported to be fair. The standing dry crops are reported to be withering for want of rain in parts of Chamrajnagar, Yedatore, Heggaddevankote, T.-Narsipur and Hunsur. Harka is being sown in parts of Malvalli. In some villages of the Krishnarajpete Taluk locusts are reported to be damaging the crops.

10. Prospects of the season not bad. But standing crops are in urgent need of rain, which is anxiously awaited. Food stocks are sufficient for the present.

11. Public health generally good, but small-pox still prevails in parts of Heggaddevankote.

12. Cattle healthy in all parts, except in parts of Heggaddevankote and Malvalli, where they are reported to be suffering from foot and mouth disease. Water and fodder are available for the present.

HASSAN.

8. Market fairly supplied. Prices high.

9. Sugar-cane in Hassan, Belur, Channarayapatna, Hole-Narsipur and Alur, and paddy in Manjarabad are reported to be in fair condition. Paddy and sugar-cane are withering in Arsikere for want of rain. The outturn of standing crops in Hole-Narsipur is estimated at 8 annas.

10. Prospects of the season somewhat hopeful. More rain is wanted in all parts. Food stocks are sufficient for the present.

11. Public health generally good. Small-pox is reported to still exist in parts of Hassan Manjarabad, Arsikere, Channarayapatna and Arkalgud.

12. Cattle generally healthy, but foot and mouth disease exists in parts of Manjarabad and Hole-Narsipur. Water and fodder are generally available, except in parts of Arsikere.

SHIMOGA.

8. Market well supplied. Prices high.

9. Kar-paddy is being harvested under the Sulekere tank and in parts of Sagar. Paddy is sown in parts of Shimoga, Sorab, Sagar and Nagar, but the young plants are much in need of rain. Sugar-cane is in a fair condition in parts of Sagar, Nagar and Sorab, where water is still available; elsewhere it has withered. Arecanut trees are reported to have withered in parts of Sagar for want of moisture. Agricultural operations are slow in Shikarpur and over a great part of Honnali.

10. Rain is anxiously awaited everywhere. Insufficiency of food stock is not yet perceptibly felt in all the taluks. Rice is being imported to Shimoga and Kumsi from the Madras Presidency.

11. Public health is generally good. Small-pox prevails in parts of Shimoga, Tirthahalli, Sagar, Sorab and Kumsi, and cholera in parts of Shikarpur, Honnali and Shimoga.

12. Supply of fodder is very limited in Honnali, Shikarpur and Sorab. In other taluks it is available to some extent. Scarcity of water is on the increase everywhere.

KADUR.

8. Market fairly well supplied.

9. Ploughing is carried on in Koppa and Tarikere. Standing sugar-cane in parts of Tarikere, Chikmagalur, Kadur and Koppa, and kar-paddy in parts of Koppa are in fairly good condition. Arecanut in Koppa is in poor condition for want of rain. Kar-paddy is being harvested in Chikmagalur. Ploughing and sowing are much delayed for want of rain, but the rainfall on the 3rd and the 4th instant at Chikmagalur has somewhat improved the condition and enabled the raiyats to sow their fields, and the seeds already sown have germinated.

10. Prospects of the season fair, but more rain is needed throughout. Food stocks are available and sufficient for the present.

11. Public health generally good, except small-pox prevails in parts of Chikmagalur, and Mudgere. Plague has re-appeared at Chikmagalur.

12. Cattle generally healthy. Anthrax reported to prevail in some villages of the Amrathapur hobli is now reported to be subsiding. Water and fodder are generally available. Fodder is reported to be wanting in parts of the Bidare hobli in the Kadur Taluk, and on that account the condition of cattle there is said to be very poor. Date leaves are being used as fodder. Supply of water is scanty in parts of Chikmagalur, Kadur and in the malnad.

CHITALDRUG.

8. Market well supplied.

9. There have been no harvesting operations during the week. More rain is anxiously awaited in all the taluks.

10. Prospects of the season fair. Food stocks available.

11. Public health good.

12. Cattle healthy. Water and fodder is procurable in limited quantities.

BANGALORE,
6th June 1906.

P. G. D'SOUZA,
for *Secy. to the Govt. of H. H. the Maharaja of Mysore, Gen. & Rev. Dept.*

LIST OF PRIZES TO BE AWARDED AT THE HORTICULTURAL SHOW TO BE HELD AT THE LAL-BAGH ON 2ND AUGUST 1906.

CLASS I.—PERENNIAL FLOWERS IN POTS.

No.	Description	Rs.
1.	Best Standard Roses, in six varieties and six pots	8
2.	Second best do in do do	5
3.	Best Dwarf Roses in do do	6
4.	Second best do in do do	4
5.	Best General Collection of Roses not including the above; not less than twelve pots and not exceeding twenty	15
6.	Second best do do do	10
7.	Third best do do do	5
8.	Best new Roses, exhibited for the first time	8
9.	Second best do do	5
*10.	Best General Collection of Foliage Plants, without duplicates	25
*11.	Second best do do	15
*12.	Best General Collection of Ferns, without duplicates	25
*13.	Second best do do	15
14.	Best Collection of Palms, one plant of each species	8
15.	Best Group of Aralias and Panax, one plant of each species	6
16.	Best Caladiums, including only one plant of each variety	7
17.	Second best do do do	5
18.	Best Collection of Gladioli, not less than six varieties	6
19.	Second best	4
20.	Best Collection of Anthuriums including only one plant of each variety	8
21.	Best Collection of Dracænas do do do	8
22.	Best New Geraniums, exhibited for the first time; one pot of each	7
23.	Best Double Geraniums, in six or more varieties, not exceeding 25 pots	6
24.	Second best do do do	4
25.	Best Single Geraniums, in eight or more varieties, not exceeding 25 pots	6
26.	Second best do do do	4
27.	Best Ivy-leaved Geraniums, double or single, not exceeding 25 pots	5
28.	Best Dahlias	7
29.	Second best Dahlias	5
30.	Best Achimenes, not less than twelve varieties	6
31.	Second best do do	3
32.	Best Tuberous-rooted Begonias, not less than eight varieties	8
33.	Second best do do	5
34.	Best Perennial Phlox, in three or more varieties	5
35.	Second best do do	3
36.	Best Pansies, in eight or more varieties, but not exceeding 25 pots	6
37.	Second best do do do	3
38.	Best Carnations, in three or more varieties	5
39.	Second best do do	3
40.	Best Cyclamen	5
41.	Best Gloxinias	6
42.	Best Fuchsias in four or more varieties	5
43.	Best Double Petunias, in four or more varieties	6
44.	Second best do do	4
45.	Best Verbenas, in six or more varieties, but not exceeding 15 pots	5
46.	Second best do do do	3
47.	Best Chrysanthemums, in eight or more varieties, but not exceeding 25 pots	7
48.	Second best do do do	5
49.	Best Cannas in twelve or more varieties	7
50.	Second best do do	5
51.	Best Novelties in Perennials, exhibited for the first time, one plant of each	6
	Total	353

CLASS II.—ANNUAL FLOWERS IN POTS.

*1.	Best General Collection of Annuals in flower	8
*2.	Second best do do	[illegible]
3.	Best Double Sunflower	3
4.	Best Asters, in six or more varieties	6
5.	Second best do do	4
6.	Best Nasturtiums, in six or more varieties	4
7.	Second best do do	2
*8.	Best Balsams, in six or more varieties	4
9.	Second best do do	2
10.	Best Phlox Drummondi, in ten or more varieties limited to fifty pots	6
11.	Second best do do	4
12.	Best Single Petunias, in six or more varieties	5
13.	Second best do do	3
14.	Best Lobelia	3
15.	Best Salpiglossis	4
16.	Second best do	2
17.	Best Pinks, in ten or more varieties, limited to 50 pots	4
18.	Second best do do	2
	Total	71

CLASS III.—CUT FLOWERS.

No.	Description	Rs.
1.	Best Arrangement of Flowers, &c., in a vase	8
2.	Second best do do	6
3.	Third best do do	3
*4.	Best Hand-Bouquet	6
*5.	Second best do	4
6.	Best Collection of Cultivated Flowers not less than twelve species or varieties	6
7.	Second best do do	3
8.	Best Collection and Arrangement of Wild Flowers and Grasses	5
9.	Best Arrangement for Dinner Table	8
10.	Second best do	5
11.	Best Cut Roses, not less than twelve varieties to be exhibited singly on Exhibition desks	6
12.	Second best do do do do	4
13.	Best Dahlias do do do do	3
14.	Second best do do do do	2
15.	Best Chrysanthemums do do do	3
16.	Second best do do do do	2
	Total ...	74

Mr. Geo. Hodson's prize of Rs. 10 for the most artistic arrangement of cut flowers in a vase, basket or bowl; to be competed for by children under twelve years of age. The arrangement of the flowers to be done at the Show by the child, who may be attended by a native servant only.

CLASS IV.—FRUITS.

*1.	Best Collection of Fruits of all kinds arranged in a basket	10
*2.	Second best do do	7
3.	Third best do do	4
4.	Best Apples, in six or more varieties	10
5.	Second best do do	7
6.	Best Peaches, in two or more varieties	7
7.	Second best do do	4
8.	Best Figs	4
9.	Second best do	2
*10.	Best Bananas (only of the finest varieties)	5
11.	Second best do do	3
*12.	Best new Mangoes	[illegible]
13.	Best Raspberries	3
14.	Best Grapes, in three or more varieties	6
15.	Second best do do	4
16.	Best Guavas	4
17.	Best Hill Gooseberry	2
18.	Best Pumeloes	3
	Total ..	91

CLASS V.—VEGETABLES.

*1.	Best Potatoes, in six or more varieties, half a maund of each	10
2.	Second best do do do	6
3.	Third best do do do	4
4.	Best Cabbage, not less than three, and excluding Drumhead	5
5.	Second best do do do	3
6.	Best Brussels Sprouts	4
7.	Best English Carrots	5
8.	Second best do	3
9.	Best Blanched Celery	5
10.	Second best do	3
11.	Best Cabbage Lettuce	3
12.	Best Cos Lettuce	3
13.	Best Endive	2
14.	Best Parsnips	4
15.	Best Beetroot	4
16.	Best Green Peas	5
17.	Second best do	3
18.	Best Onions	4
19.	Best Asparagus	5
*20.	Best Custard Marrow	4
21.	Best Turnips	4
22.	Best Cauliflower, not less than three	5
23.	Second best do	3
24.	Best Knol-khol	3
25.	Best Cho-cho	2
26.	Best Tomato, not less than three varieties	3
*27.	Best Basket of English Vegetables	10

CLASS V.—VEGETABLES—*concld.*

No.	Description.	Rs.
28.	Second best of English vegetables	6
29.	Third best do do	3
30.	Best Collection of Sweet Herbs	5
31.	Best Bendekayi	2
32.	Best Hagalakayi	2
33.	Best Gorikayi	2
34.	Best Huralikayi	2
35.	Best Padavalakayi	2
36.	Best Budi Kumbalakayi	2
37.	Best Collection of Country Vegetables in varieties other than those mentioned above	5
	Total ...	146
	Grand Total ..	735

General Conditions.

1. Prizes marked by an asterisk are open to the whole Province, as also to the Presidency of Madras.

2. In view to arrangements being made for staging plants, it is requested that exhibitors will notify to the undersigned, four days prior to the Show, what number of pots they intend to enter and for what prize they intend to compete. Plants intended for competition should be delivered in the Conservatory before 4 P. M. on the day previous to the Show.

3. Cut Flowers may be delivered up till 2 P. M. on the day of the Show, but not later if intended for competition.

4. No prize shall be awarded unless there are at least two competitors for it, except in cases of rare excellence, when the Judges will use their own discretion.

The number of exhibits in all classes and sections should exceed the number of prizes offered, otherwise the Judges will be authorised to reduce the full value of such prizes.

5. It shall also be competent for the Judges to reduce the amount of prizes if, in their opinion, the articles exhibited do not merit the full sums.

6. Obtrusive staging, overcrowding, packing to conceal blemishes, and artificial support to blooms, etc., will be judged as defects to an exhibit, preference being given to natural growth and artistic arrangement.

7. Where a number limit is laid down, any exhibit exceeding that number shall be disqualified.

8. Where one plant of each species or variety is specified as a condition, any exhibit containing duplicates shall be disqualified.

9. If funds are available, the Judges may award special extra prizes in cases of exceptional merit.

10. All exhibits sent for competition must be *bona fide* the produce of, or have been raised by, the exhibitors; and unless otherwise specified, must have been grown in Bangalore.

The Judges may withhold any prize untill proof of these conditions be produced. Contractors bringing up fruit and vegetables for competition in their own name are disqualified.

11. Exhibitors will not be permitted to remove their exhibits until the Show is closed, and gardeners and others found offering articles for sale before 6 P. M. on the day of the Show shall be summarily ejected.

12. The names of exhibitors can only be attached to exhibits when the judging has been completed. Plant labels will be supplied by the Show Executive, subject to the approval of the same.

The following Rules for awarding Medals at the Horticultural Shows are hereby notified to the public.

The Government of His Highness the Maharaja have sanctioned the grant of medals in addition to the usual money prizes offered at the half yearly horticultural shows, subject to the following conditions :—

(1) The medals will consist of a gold medal for classes I and II, a silver medal for class IV and a bronze medal for class V.

(2) These medals will be awarded by the Judges, at their discretion, at the Summer Show held in July or August in each year.

(3) The following exhibitors will be qualified for the award of a medal :—

(*a*) The exhibitor of the best all-round exhibit in the appropriate class or classes taking the two shows of the calendar year together.

(*b*) The exhibitor of an exhibit of more than ordinary excellence in any sub-class.

(*c*) The exhibitor of any specially meritorious novelty.

(4) No exhibitor who has been awarded a medal in any class will be qualified to receive another medal in that class during the three calendar years succeeding that in which he has received the medal.

(5) No exhibitor will be qualified to receive a medal who is not the *bona fide* cultivator of his exhibit, or the actual occupant of the garden in which the exhibit was raised, *e.g.*, no contractor, who has merely purchased fruit or vegetables exhibited will be eligible.

(6) It will be open to the Judges to withhold any or all the medals in any year on the ground of deficiency of merit in the exhibits.

J. CAMERON,
Supt., Govt. Gardens.

Prices Current [Wholesale] of Food Grains, &c., at the Head-Quarters of the several Districts of the Mysore State during the fortnight ending 15th May 1906.

ಸನ್ 1906ನೆ ಇಸವಿ ಮೇ ಮಾಹೆ 15ನೆ ತಾರೀಖಿಗೆ ಆಖೈರಾದ ಪಂಧ್ರಾವಾಡಾ ಬಾಬತು ಒಟ್ಟು ವ್ಯಾಪಾರದ ದುಕಾನಗಳಲ್ಲಿ ಪುರೋಖ್ತಾದ ಆಹಾರ ಜಿನಸಿ ವಗೈರೆ ನಿರಖುನಾಮಾ ಡಿಸ್ಟ್ರಿಕ್ಟ್ ಹೆಡ್ ಕ್ವಾರ್ಟರ್‌ಗಳ ಬಾಬತು.

Prices per 10 maunds of 82⅔ lbs. each ಮಣ 1ಕ್ಕೆ 82⅔ ಪೌನುಗಳ ಮೇರಿಗೆ 10 ಮಣಕ್ಕೆ ಖರೀದಿ

Grains and Pulses ಧಾನ್ಯ ಮತ್ತು ಕಾಳುಗಳು

District ಡಿಸ್ಟ್ರಿಕ್ಟ್	Rice unhusked (paddy) Oryza sativa ಭತ್ತ 2			Rice, best sort ಅವಲ್ ತರಹೆ ಅಕ್ಕಿ 3			Rice, common ಸಾಧಾರಣ ಅಕ್ಕಿ 4			Wheat Triticum sativum ಹೊಟ್ಟೆ ಗೋಧಿ 5			Barley Hordeum vulgare ಜವೆ ಗೋಧಿ 6		
	Present fortnight ಸಜಿಕಕ್ಕೂರ್ ಪಂಧ್ರಾವಾಡಾ	Past fortnight ಗುಜಿಷ್ಟಾ ಪಂಧ್ರಾವಾಡಾ	Corresponding fortnight of last year ಗುಜಿಷ್ಟಾ ಸಾಲ್ ಪೊಕಾಬಿಲಾ ಪಂಧ್ರಾವಾಡಾ	Present fortnight ಸಜಿಕಕ್ಕೂರ್ ಪಂಧ್ರಾವಾಡಾ	Past fortnight ಗುಜಿಷ್ಟಾ ಪಂಧ್ರಾವಾಡಾ	Corresponding fortnight of last year ಗುಜಿಷ್ಟಾ ಸಾಲ್ ಪೊಕಾಬಿಲಾ ಪಂಧ್ರಾವಾಡಾ	Present fortnight ಸಜಿಕಕ್ಕೂರ್ ಪಂಧ್ರಾವಾಡಾ	Past fortnight ಗುಜಿಷ್ಟಾ ಪಂಧ್ರಾವಾಡಾ	Corresponding fortnight of last year ಗುಜಿಷ್ಟಾ ಸಾಲ್ ಪೊಕಾಬಿಲಾ ಪಂಧ್ರಾವಾಡಾ	Present fortnight ಸಜಿಕಕ್ಕೂರ್ ಪಂಧ್ರಾವಾಡಾ	Past fortnight ಗುಜಿಷ್ಟಾ ಪಂಧ್ರಾವಾಡಾ	Corresponding fortnight of last year ಗುಜಿಷ್ಟಾ ಸಾಲ್ ಪೊಕಾಬಿಲಾ ಪಂಧ್ರಾವಾಡಾ	Present fortnight ಸಜಿಕಕ್ಕೂರ್ ಪಂಧ್ರಾವಾಡಾ	Past fortnight ಗುಜಿಷ್ಟಾ ಪಂಧ್ರಾವಾಡಾ	Corresponding fortnight of last year ಗುಜಿಷ್ಟಾ ಸಾಲ್ ಪೊಕಾಬಿಲಾ ಪಂಧ್ರಾವಾಡಾ
	Rs a p	Rs a p	Rs a p	Rs a p	Rs a p	Rs a p	Rs a p	Rs a p	Rs a p	Rs a p	Rs a p	Rs a p	Rs a p	Rs a p	Rs a p
Bangalore	24 11 11	23 8 2	15 10 9	59 10 0	57 3 11	44 11 2	51 1 9	49 5 7	37 10 7	42 7 1	37 13 8	31 13 4	*	*	*
Kolar ...	22 0 0	22 0 0	20 0 0	57 0 0	57 0 0	50 0 0	53 0 0	53 0 0	44 0 0	50 0 0	50 0 0	40 0 0	50 0 0	50 0 0	40 0 0
Tumkur ...	22 0 0	22 0 0	18 0 0	63 0 0	63 0 0	45 0 0	48 0 0	48 0 0	44 0 0	58 0 0	58 0 0	39 0 0	58 0 0	58 0 0	39 0 0
Mysore ..	27 3 2	27 3 2	24 3 3	51 3 2	51 3 2	43 14 1	43 14 1	43 14 2	38 9 7	58 12 4	58 12 4	39 2 11	58 14 4	58 12 4	*
Hassan ...	20 9 2	22 4 7	17 2 3	53 7 9	53 7 9	45 11 5	51 6 10	51 6 10	41 2 3	58 12 5	58 12 5	41 2 3	61 11 5	53 7 9	41 2 3
Shimoga ...	21 12 4	21 12 4	16 4 0	55 15 3	65 1 8	49 1 0	49 1 0	55 15 3	35 8 4	55 15 5	55 15 5	35 8 4	*	*	*
Kadur ...	15 0 0	15 0 0	19 0 0	52 0 0	52 0 0	50 0 0	50 0 0	50 0 0	36 0 0	50 0 0	50 0 0	36 0 0	32 0 0	32 0 0	32 0 0
Chitaldrug	25 11 5	25 11 5	17 2 4	58 12 5	58 12 5	45 11 5	51 6 10	51 6 10	41 2 3	51 6 10	51 6 10	34 4 7	51 6 10	51 6 10	34 4 7

* Article not available

693

Prices Current [Wholesale] of Food Grains, &c , at the Head-Quarters of the several Districts of the Mysore State during the fortnight ending 15th May 1906—*contd.*

ಸನ 1906 ನೆ ಇಸವಿ ಮೇ ಮಾಹೇ 15 ನೆ ತಾರೀಖಿಗೆ ಆಖೈರಾದ ಪಂಧ್ರಾನಾಡಾ ಬಾಬತು ಒಟ್ಟುವ್ಯಾಪಾರದ ದರ್ಕಾರಗಳಲ್ಲಿ ಪುರೋಹಿತ್ ಆದ ಆಹಾರಜಿನಸಿ ವಗೈರೆ ನಿರಖುನಾಮಾ-ಡಿಸ್ಟ್ರಿಕ್ಟ್ ಹೆಡ್ ಕ್ವಾರ್ಟರ್‌ಗಳ ಬಾಬತು. ಸಕೇಷ.

Prices per 10 maunds of 82⅔ lbs. each ಮಣ 1ಕ್ಕೆ 82⅔ ಪೌನುಗಳ ಮೇರಿಗೆ 10 ಮಣಕ್ಕೆ ಖರೀದಿ

Grains and Pulses ಧಾನ್ಯ ಮತ್ತು ಕಾಳುಗಳು

District ಡಿಸ್ಟ್ರಿಕ್ಟ	Cholam or javar Sorghum vulgare ಜೋಳ 7			Kambu or Bajara Pennisetum typhoideum ಸಜ್ಜೆ 8			Ragi Eleusine coracana ರಾಗಿ 9			Maize Zea mays ಮುಸುಕಿನ ಜೋಳ 10			Bengal gram Cicer arietinum ಕಡಲೆ 11		
	Present fortnight ಪಂಧ್ರಾನಾಡಾ	Past fortnight ಪಂಧ್ರಾನಾಡಾ	Corresponding fortnight of last year ಸಾಲ್ ಪೊಕಾಬಿಲಿ ಪಂಧ್ರಾನಾಡಾ	Present fortnight ಪಂಧ್ರಾನಾಡಾ	Past fortnight ಪಂಧ್ರಾನಾಡಾ	Corresponding fortnight of last year ಸಾಲ್ ಪೊಕಾಬಿಲಿ ಪಂಧ್ರಾನಾಡಾ	Present fortnight ಪಂಧ್ರಾನಾಡಾ	Past fortnight ಪಂಧ್ರಾನಾಡಾ	Corresponding fortnight of last year ಸಾಲ್ ಪೊಕಾಬಿಲಿ ಪಂಧ್ರಾನಾಡಾ	Present fortnight ಪಂಧ್ರಾನಾಡಾ	Past fortnight ಪಂಧ್ರಾನಾಡಾ	Corresponding fortnight of last year ಸಾಲ್ ಪೊಕಾಬಿಲಿ ಪಂಧ್ರಾನಾಡಾ	Present fortnight ಪಂಧ್ರಾನಾಡಾ	Past fortnight ಪಂಧ್ರಾನಾಡಾ	Corresponding fortnight of last year ಸಾಲ್ ಪೊಕಾಬಿಲಿ ಪಂಧ್ರಾನಾಡಾ
	Rs a p	Rs a p	Rs a p	Rs a p	Rs a p	Rs a p	Rs a p	Rs a p	Rs a p	Rs a p	Rs a p	Rs a p	Rs a p	Rs a p	Rs a p
Bangalore	*	*	*	*	*	*	23 8 2	22 13 9	20 9 1	3 maizes for 4 pies	3 maizes for 4 pies.	3 maizes for 4 pies.	46 1 7	46 1 7	32 10 5
Kolar ...	*	*	*	*	*	*	26 0 0	26 0 0	20 0 0	*	*	*	44 0 0	44 0 0	40 0 0
Tumkur ...	29 0 0	29 0 0	18 0 0	*	*	*	22 0 0	22 0 0	18 0 0	*	*	*	48 0 0	48 0 0	39 0 0
Mysore ..	27 14 2	27 14 2	18 4 6	*	*	*	25 7 6	25 7 6	22 10 1	*	*	*	41 2 3	41 2 3	35 4 3
Hassan ...	*	*	*	*	*	*	25 11 5	25 11 5	20 9 2	*	*	*	51 6 10	51 6 10	37 6 5
Shimoga ...	32 8 0	32 8 0	16 14 0	*	*	*	27 15 6	27 15 6	17 12 2	*	*	*	49 1 0	55 15 5	32 8 0
Kadur ...	22 0 0	22 0 0	17 0 0	*	*	*	25 0 0	25 0 0	15 0 0	*	*	*	50 0 0	50 0 0	32 0 0
Chitaldrug	31 10 4	31 10 4	17 2 4	25 11 5	25 11 5	17 2 4	27 6 10	27 6 10	17 2 4	*	*	*	51 6 10	51 6 10	34 4 7

* Article not available.

6 94

Prices Current [Wholesale] of Food Grains, &c., at the Head-Quarters of the several Districts of the Mysore State during the fortnight ending 15th May 1906—*contd.*

ಸನ್ 1906ನೆ ಇಸವಿ ಮೇ ಮಾಹೇ 15ನೆ ತಾರೀಖಿಗೆ ಆಖೈರಾದ ಪಂಧ್ರಾವಾಡಾ ಬಾಬತು ಒಟ್ಟು ವ್ಯಾಪಾರದ ದುಕಾನಗಳಲ್ಲಿ ಪುರೋಖ್ತ ಆದ ಆಹಾರಜಿನಸಿ ವಗೈರೆ ನಿರಖುನಾಮಾ-ಡಿಸ್ಟ್ರಿಕ್ಟ್ ಹೆಡ್ ಕ್ವಾರ್ಟರಿಗಳ ಬಾಬತು-ಸಂಕ್ಷೇಪ.

District ಡಿಸ್ಟ್ರಿಕ್ಟ್	Prices per 10 maunds of 82 2/7 lbs. each ಮಣ 1ಕ್ಕೆ 28 2/7 ಪೌನುಗಳ ಮೇರಿಗೆ 10 ಮಣಕ್ಕೆ ಖರೀದಿ																													
	Grains and Pulses ಧಾನ್ಯ ಮತ್ತು ಕಾಳುಗಳು																								Ghee (Clarified butter) ತುಪ್ಪ					
	Horse gram Dolichos biflorus ಹುರಳಿ						Arhar Cajanus indicus ತೊಗರಿ						Arhar Dal ತೊಗರಿ ಬ್ಯಾಳೆ						Kangani Setaria italica ನವಣೆ											
	12						13						14						15						16					
	Present fortnight ಸಜಪಕ್ಕೂರ್ ಪಂಧ್ರಾವಾಡಾ			Past fortnight ಗುಜಷ್ತಾ ಪಂಧ್ರಾವಾಡಾ			Corresponding fortnight of last year ಗುಜಷ್ತಾ ಸಾಲ್ ಪೊಕಾಬಿಲಾ ಪಂಧ್ರಾವಾಡಾ			Present fortnight ಸಜಪಕ್ಕೂರ್ ಪಂಧ್ರಾವಾಡಾ			Past fortnight ಗುಜಷ್ತಾ ಪಂಧ್ರಾವಾಡಾ			Corresponding fortnight of last year ಗುಜಷ್ತಾ ಸಾಲ್ ಪೊಕಾಬಿಲಾ ಪಂಧ್ರಾವಾಡಾ			Present fortnight ಸಜಪಕ್ಕೂರ್ ಪಂಧ್ರಾವಾಡಾ			Past fortnight ಗುಜಷ್ತಾ ಪಂಧ್ರಾವಾಡಾ			Corresponding fortnight of last year ಗುಜಷ್ತಾ ಸಾಲ್ ಪೊಕಾಬಿಲಾ ಪಂಧ್ರಾವಾಡಾ			Present fortnight ಸಜಪಕ್ಕೂರ್ ಪಂಧ್ರಾವಾಡಾ			Past fortnight ಗುಜಷ್ತಾ ಪಂಧ್ರಾವಾಡಾ			Corresponding fortnight of last year ಗುಜಷ್ತಾ ಸಾಲ್ ಪೊಕಾಬಿಲಾ ಪಂಧ್ರಾವಾಡಾ		
	Rs	a	p	Rs	a	p	Rs	a	p	Rs	a	p	Rs	a	p	Rs	a	p	Rs	a	p	Rs	a	p	Rs	a	p	Rs	a	p
Bangalore	29	14	9	26	5	4	25	5	1	28	2	1	24	6	1	30	7	7	47	0	0	45	11	5	45	11	5	*			*			*			488	9	1	420	0	0	342	13	8
Kolar ...	29	0	0	29	0	0	26	0	0	*			*			*			44	0	0	44	0	0	50	0	0	*			*			*			400	0	0	400	0	0	400	0	0
Tumkur ...	28	0	0	28	0	0	29	0	0	30	0	0	30	0	0	29	0	0	48	0	0	48	0	0	48	0	0	*			*			*			291	0	0	291	0	0	289	0	0
Mysore ...	25	9	9	25	9	9	26	13	11	43	14	2	43	14	2	31	5	6	54	13	8	54	13	8	56	3	8	*			*			*			516	3	0	398	2	5	356	0	0
Hassan ...	41	2	3	37	6	5	34	4	7	37	6	5	41	2	3	37	6	5	51	6	10	51	6	10	51	6	10	*			*			*			† 548	9	1	† 411	6	10	† 377	2	3
Shimoga ...	35	8	4	35	8	4	35	8	4	32	8	0	32	8	0	*			49	1	0	49	1	0	45	15	0	32	8	0	32	8	0	*			415	1	8	415	1	8	410	15	10
Kadur ...	32	0	0	32	0	0	30	0	0	30	0	0	30	0	0	30	0	0	42	0	0	42	0	0	05	0	0	*			*			*			363	0	0	363	0	0	363	0	0
Chitaldrug	37	6	5	37	6	5	29	6	2	29	6	2	29	6	2	29	6	2	51	6	10	51	6	10	45	11	5	20	9	2	20	9	2	13	11	5	411	6	10	411	6	10	411	6	10

* Article not available. † Increase due to great demand and short supply, owing to marriage season.

695

Prices Current [Wholesale] of Food Grains, &c., at the Head-Quarters of the several Districts of the Mysore State during the fortnight ending 15th May 1906—*contd.*

ಸನ 1906ನೆ ಇಸವಿ ಮೇ ಮಾಹೇ 15ನೆ ತಾರೀಖಿಗೆ ಆಖೈರಾದ ಪಂಧ್ರಾವಾಡಾ ಬಾಬತು ಒಟ್ಟುವ್ಯಾಪಾರದ ದುಕಾನಗಳಲ್ಲಿ ಪುರೋಖ್ತ್ ಆದ ಆಹಾರ ಜಿನಸಿ ವಗೈರೆ ನಿರಖುನಾಮಾ-ಡಿಸ್ಟ್ರಿಕ್ಟ ಹೆಡ್‌ಕ್ವಾರ್ಟರ್‌ಗಳ ಬಾಬತು-ಸರೇಷ.

Prices per 10 maunds of 82 2/7 lbs. each ಮಣ 1ಕ್ಕೆ 82 2/7 ಪೌನುಗಳ ಮೇರಿಗೆ 10 ಮಣಕ್ಕೆ ಖರೀದಿ

District ಡಿಸ್ಟ್ರಿಕ್ಟ	Wheat Flour ಗೋಧಿ ಹಿಟ್ಟು			Sea Salt ಕಲ್ಲುಪ್ಪು			Oil Seeds: Gingelly Sesamum indicum ಎಳ್ಳು			Sugar: Goor or jaggory ಬೆಲ್ಲ			Fibres: Cotton cleaned Gossypium ಅರಳೆ		
	17			18			19			20			21		
	Present fortnight ಪ್ರಜಕ್ಕೂರ್ ಪಂಧ್ರಾವಾಡಾ	Past fortnight ಗುಜಷ್ತಾ ಪಂಧ್ರಾವಾಡಾ	Corresponding fortnight of last year ಗುಜಷ್ತಾ ಸಾಲ್ ಪ್ರೊಕಾಬಿಲಾ ಪಂಧ್ರಾವಾಡಾ	Present fortnight ಪ್ರಜಕ್ಕೂರ್ ಪಂಧ್ರಾವಾಡಾ	Past fortnight ಗುಜಷ್ತಾ ಪಂಧ್ರಾವಾಡಾ	Corresponding fortnight of last year ಗುಜಷ್ತಾ ಸಾಲ್ ಪ್ರೊಕಾಬಿಲಾ ಪಂಧ್ರಾವಾಡಾ	Present fortnight ಪ್ರಜಕ್ಕೂರ್ ಪಂಧ್ರಾವಾಡಾ	Past fortnight ಗುಜಷ್ತಾ ಪಂಧ್ರಾವಾಡಾ	Corresponding fortnight of last year ಗುಜಷ್ತಾ ಸಾಲ್ ಪ್ರೊಕಾಬಿಲಾ ಪಂಧ್ರಾವಾಡಾ	Present fortnight ಪ್ರಜಕ್ಕೂರ್ ಪಂಧ್ರಾವಾಡಾ	Past fortnight ಗುಜಷ್ತಾ ಪಂಧ್ರಾವಾಡಾ	Corresponding fortnight of last year ಗುಜಷ್ತಾ ಸಾಲ್ ಪ್ರೊಕಾಬಿಲಾ ಪಂಧ್ರಾವಾಡಾ	Present fortnight ಪ್ರಜಕ್ಕೂರ್ ಪಂಧ್ರಾವಾಡಾ	Past fortnight ಗುಜಷ್ತಾ ಪಂಧ್ರಾವಾಡಾ	Corresponding fortnight of last year ಗುಜಷ್ತಾ ಸಾಲ್ ಪ್ರೊಕಾಬಿಲಾ ಪಂಧ್ರಾವಾಡಾ
	Rs a p	Rs a p	Rs a p	Rs a p	Rs a p	Rs a p	Rs a p	Rs a p	Rs a p	Rs a p	Rs a p	Rs a p	Rs a p	Rs a p	Rs a p
Bangalore..	64 8 7	56 15 1	48 6 5	25 8 10	26 8 0	29 13 0	72 5 5	72 5 5	58 12 5	49 1 7	49 4 7	64 4 7	205 11 5	205 11 5	205 11 5
Kolar ...	50 0 0	50 0 0	50 0 0	26 0 0	26 0 0	33 0 0	50 0 0	50 0 0	50 0 0	44 0 0	44 0 0	44 0 0	*	*	*
Tumkur ...	*	*	*	28 0 0	28 0 0	33 0 0	53 0 0	53 0 0	*	44 0 0	44 0 0	*	*	*	*
Mysore ...	57 9 6	57 9 6	48 0 0	25 7 6	25 7 6	27 6 1	70 8 5	70 8 5	65 13 3	52 9 1	52 9 1	79 15 11	188 9 11	188 9 11	188 9 11
Hassan ...	58 12 6	68 9 2	68 9 2	29 6 3	29 6 3	34 4 7	68 9 2	68 9 2	51 6 10	68 9 2	51 6 10	85 11 5	171 6 10	171 6 10	171 6 10
Shimoga ...	71 7 4	71 7 4	49 1 0	24 6 10	24 6 10	27 15 6	55 15 5	55 15 5	49 1 0	58 2 0	58 2 0	85 5 10	226 11 6	226 11 6	187 13 10
Kadur ...	64 0 0	64 0 0	64 0 0	27 0 0	27 0 0	31 0 0	50 0 0	50 0 0	50 0 0	72 0 0	72 0 0	72 0 0	303 0 0	303 0 0	303 0 0
Chitaldrug	51 6 10	51 6 10	45 11 5	41 2 3	41 2 3	41 2 3	51 6 10	51 6 10	34 4 7	137 2 3	137 2 3	137 2 3	137 2 3	137 2 3	137 2 3

* Article not available.

636

Prices Current [Wholesale] of Food Grains, &c., at the Head-Quarters of the several Districts of the Mysore State during the fortnight ending 15th May 1906—*contd.*

ಸನ್ 1906ನೆ ಇಸವಿ ಮೇ ಮಾಹೆ 15ನೆ ತಾರೀಖಿಗೆ ಆಖೈರಾದ ಪಂಧ್ರಾವಾಡಾ ಬಾಬತು ಒಟ್ಟುವ್ಯಾಪಾರದ ದುಕಾನ್‌ಗಳಲ್ಲಿ ಪ್ರಚಲಿತವಾದ ಆಹಾರಜಿನಸು ವಗೈರೆ ನಿರಖುನಾಮಾ-ಡಿಸ್ಟ್ರಿಕ್ಟ್‌ಹೆಡ್ ಕ್ವಾರ್ಟರ್‌ಗಳ ಬಾಬತು-ಸಂಕ್ಷೇಪ.

Prices per 10 maunds of 82 2/7 lbs. each ಮಣ 1ಕ್ಕೆ 82 2/7 ಪಾನುಗಳ ಮೇರಿಗೆ ಮಣ 10ಕ್ಕೆ ಖರೀದಿ

District ಡಿಸ್ಟ್ರಿಕ್ಟ್	Drugs and Narcotics — Tobacco leaf Nicotiana tabacum and N. rustica ಹೊಗೆಸೊಪ್ಪು 22			Fodder — Grass ಹಸೀ ಹುಲ್ಲು 23			Straw ಒಣ ಹುಲ್ಲು 24			Javar stalks ಜೋಳದ ಕಡ್ಡಿ 25		
	Present fortnight ಮುಜಕೂರ್ ಪಂಧ್ರಾವಾಡಾ	Past fortnight ಗುಜಷ್ತಾ ಪಂಧ್ರಾವಾಡಾ	Corresponding fortnight of last year ಗುಜಷ್ತಾ ಸಾಲ್ ಮೊಕಾಬಿಲಾ ಪಂಧ್ರಾವಾಡಾ	Present fortnight ಮುಜಕೂರ್ ಪಂಧ್ರಾವಾಡಾ	Past fortnight ಗುಜಷ್ತಾ ಪಂಧ್ರಾವಾಡಾ	Corresponding fortnight of last year ಗುಜಷ್ತಾ ಸಾಲ್ ಮೊಕಾಬಿಲಾ ಪಂಧ್ರಾವಾಡಾ	Present fortnight ಮುಜಕೂರ್ ಪಂಧ್ರಾವಾಡಾ	Past fortnight ಗುಜಷ್ತಾ ಪಂಧ್ರಾವಾಡಾ	Corresponding fortnight of last year ಗುಜಷ್ತಾ ಸಾಲ್ ಮೊಕಾಬಿಲಾ ಪಂಧ್ರಾವಾಡಾ	Present fortnight ಮುಜಕೂರ್ ಪಂಧ್ರಾವಾಡಾ	Past fortnight ಗುಜಷ್ತಾ ಪಂಧ್ರಾವಾಡಾ	Corresponding fortnight of last year ಗುಜಷ್ತಾ ಸಾಲ್ ಮೊಕಾಬಿಲಾ ಪಂಧ್ರಾವಾಡಾ
	Rs a p	Rs a p	Rs a p	Rs a p	Rs a p	Rs a p	Rs a p	Rs a p	Rs a p	Rs a p	Rs a p	Rs a p
Bangalore..	291 6 10	291 6 10	308 9 2	9 2 3	9 2 3	7 9 10	8 9 1	8 9 1	6 13 9	*	*	*
Kolar ...	*	*	*	5 0 0	5 0 0	5 0 0	8 0 0	8 0 0	8 0 0	*	*	*
Tumkur ...	*	*	*	*	*	*	*	*	*	*	*	*
Mysore ...	280 3 3	280 3 3	280 8 3	11 6 4	11 6 4	11 6 10	6 8 2	6 8 2	6 8 2	6 8 0	6 8 0	7 8 0
Hassan ...	171 6 10	171 6 10	171 6 10	1 11 5	1 11 5	1 11 5	3 6 10	3 6 10	3 6 10	*	*	*
Shimoga ...	173 0 4	173 0 4	173 0 4	*	*	*	3 10 4	3 10 4	1 13 2	*	*	*
Kadur ..	303 0 0	303 0 0	303 0 0	*	*	*	22 0 0	22 0 0	22 0 0	*	*	*
Chitaldrug	137 2 3	137 2 3	137 2 3	*	*	*	13 11 5	13 11 5	6 13 8	13 11 5	13 11 5	13 11 5

* Article not available.

Prices Current [Wholesale] of Food Grains, &c., at the Head-Quarters of the several Districts of the Mysore State during the fortnight ending 15th May 1906—*contd.*

ಸನ 1906ನೆ ಇಸವಿ ಮೇ ಮಾಹೆ 15ನೆ ತಾರೀಖಿಗೆ ಆಖೈರಾದ ಪಂಧ್ರಾವಾಡಾ ಬಾಬತು ಒಟ್ಟುವ್ಯಾಪಾರದ ದುಕಾನಗಳಲ್ಲಿ ಫುರೋಖ್ತಾದ ಆಹಾರಜಿನಸು ವಗೈರೆ ನಿರಖುನಾಮಾ-ಡಿಸ್ಟ್ರಿಕ್ಟ್‌ಹೆಡ್‌ಕ್ವಾರ್ಟರ್‌ಗಳ ಬಾಬತು-ಸಲೇಷ.

District ಡಿಸ್ಟ್ರಿಕ್ಟ	Prices per 10 maunds of 82 2/7 lbs. each ಮಣ 1ಕ್ಕೆ 82 2/7 ಪೌನುಗಳ ಮೇರಿಗೆ 10 ಮಣಕ್ಕೆ ಖರೀದಿ																							
	Garden produce																							
	Turmeric Curcuma longa ಅರಶಿನ							Coffee Coffea arabica ಕಾಫಿ						Cardamom Amomum aromaticum ಯಾಲಕ್ಕಿ						Supari Areca catechu ಅಡಿಕೆ					
	26							27						28						29					
	Present fortnight ಸುಪತ್ತಕ್ಕೆರ ಪಂಧ್ರಾವಾಡಾ			Past fortnight ಗುಜಷ್ಟಾ ಪಂಧ್ರಾವಾಡಾ			Corresponding fortnight of last year ಗುಜಷ್ಟಾ ಸಾಲ್ ಸೆಕಾಬಿಲಾ ಪಂಧ್ರಾವಾಡಾ				Present fortnight ಸುಪತ್ತಕ್ಕೆರ ಪಂಧ್ರಾವಾಡಾ			Past fortnight ಗುಜಷ್ಟಾ ಪಂಧ್ರಾವಾಡಾ			Corresponding fortnight of last year ಗುಜಷ್ಟಾ ಸಾಲ್ ಸೆಕಾಬಿಲಾ ಪಂಧ್ರಾವಾಡಾ			Present fortnight ಸುಪತ್ತಕ್ಕೆರ ಪಂಧ್ರಾವಾಡಾ			Past fortnight ಗುಜಷ್ಟಾ ಪಂಧ್ರಾವಾಡಾ			Corresponding fortnight of last year ಗುಜಷ್ಟಾ ಸಾಲ್ ಸೆಕಾಬಿಲಾ ಪಂಧ್ರಾವಾಡಾ		
	Rs	a	p	Rs	a	p	Rs	a	p	Rs	a	p	Rs	a	p	Rs	a	p	Rs	a	p	Rs	a	p	Rs	a	p
Bangalore	111	6	10	111	6	10	64	4	7	317	2	3	342	13	8	342	13	8	1,371	6	10	1,371	6	10	1,711	6	10	317	2	3	308	9	2	282	13	9
Kolar ..	100	0	0	100	0	0	100	0	0	400	0	0	400	0	0	400	0	0	1,600	0	0	1,600	0	0	1,600	0	0	400	0	0	400	0	0	400	0	0
Tumkur ...	*			*			*			*			*			*			*			*			*			*			*			*		
Mysore ...	109	1	5	109	1	5	81	13	1	286	14	0	286	14	0	312	5	6	1,690	8	4	1,690	8	4	1,690	8	4	308	9	2	308	9	2	342	13	8
Hassan ...	102	13	9	102	13	9	68	9	2	308	9	2	274	4	7	274	4	7	1,028	9	1	1,028	9	1	857	2	3	205	11	5	171	6	10	171	6	10
Shimoga ...	136	15	8	136	15	8	85	5	10	250	12	6	250	12	6	273	15	4	1,095	15	10	1,095	15	10	657	8	0	273	15	4	273	15	4	346	4	0
Kadur ...	151	0	0	151	0	0	151	0	0	363	0	0	363	0	0	363	0	0	2,100	0	0	2,100	0	0	2,424	0	0	363	0	0	363	0	0	363	0	0
Chitaldrug	137	2	3	137	2	3	137	2	3	411	6	10	411	6	10	411	6	10	3,291	6	10	3,291	6	10	3,291	6	10	205	11	5	205	11	5	205	11	5

* Article not available.

Prices Current [Wholesale] of Food Grains, &c., at the Head-Quarters of the several Districts of the Mysore State during the fortnight ending 15th May 1906—*concld.*

ಸನ 1906ನೆ ಇಸವಿ ಮೇ ಮಾಹೆ 15ನೆ ತಾರೀಖಿಗೆ ಆಖೈರಾದ ಪಂಧ್ರಾವಾಡಾ ಬಾಬತು ಒಟ್ಟು ವ್ಯಾಪಾರದ ದುಕಾನಗಳಲ್ಲಿ ಪುರೋಖ್ತ್ ಆದ ಆಹಾರಜಿನಸಿ ವಗೈರೆ ನಿರಖುನಾವಾ-ಡಿಸ್ಟ್ರಿಕ್ಟ್‌ಹೆಡ್ ಕ್ವಾರ್ಟರ್‌ಗಳ ಬಾಬತುಸವಾಪ್ತಿ.

District ಡಿಸ್ಟ್ರಿಕ್ಟ್	Prices per 10 maunds of 82⅔ lbs. each ಮಣ 1ಕ್ಕೆ 82⅔ ಪೌನುಗಳ ಮೇರಿಗೆ 10 ಮಣಕ್ಕೆ ಖರೀದಿ																				
	Garden produce												Plough bullocks (pair) ಉಳೋಎತ್ತುಗಳು ಜೊತೆ 1ಕ್ಕೆ			Sheep (score) ಕುರಿಗಳು 20ಕ್ಕೆ		
	Dry cocoanut cocos nucifera ಖೊಬರಿ			Hides (cattle) ದನವಿನ ಚರ್ಮ														
	30			31									32			33		
	Present fortnight ಸಜಕ್ಕೂರ್ ಪಂಧ್ರಾವಾಡಾ	Past fortnight ಗುಜಷ್ತಾ ಪಂಧ್ರಾವಾಡಾ	Corresponding fortnight of last year ಗುಜಷ್ತಾ ಸಾಲ್ ಸೊಕಾಬಿಲಾ ಪಂಧ್ರಾವಾಡಾ	Present fortnight ಸಜಕ್ಕೂರ್ ಪಂಧ್ರಾವಾಡಾ	Past fortnight ಗುಜಷ್ತಾ ಪಂಧ್ರಾವಾಡಾ	Corresponding fortnight of last year ಗುಜಷ್ತಾ ಸಾಲ್ ಸೊಕಾಬಿಲಾ ಪಂಧ್ರಾವಾಡಾ	Present fortnight ಸಜಕ್ಕೂರ್ ಪಂಧ್ರಾವಾಡಾ	Past fortnight ಗುಜಷ್ತಾ ಪಂಧ್ರಾವಾಡಾ	Corresponding fortnight of last year ಗುಜಷ್ತಾ ಸಾಲ್ ಸೊಕಾಬಿಲಾ ಪಂಧ್ರಾವಾಡಾ	Present fortnight ಸಜಕ್ಕೂರ್ ಪಂಧ್ರಾವಾಡಾ	Past fortnight ಗುಜಷ್ತಾ ಪಂಧ್ರಾವಾಡಾ	Corresponding fortnight of last year ಗುಜಷ್ತಾ ಸಾಲ್ ಸೊಕಾಬಿಲಾ ಪಂಧ್ರಾವಾಡಾ	Present fortnight ಸಜಕ್ಕೂರ್ ಪಂಧ್ರಾವಾಡಾ	Past fortnight ಗುಜಷ್ತಾ ಪಂಧ್ರಾವಾಡಾ	Corresponding fortnight of last year ಗುಜಷ್ತಾ ಸಾಲ್ ಸೊಕಾಬಿಲಾ ಪಂಧ್ರಾವಾಡಾ
	Rs a p	Rs a p	Rs a p	Rs a p	Rs a p	Rs a p	Rs a p	Rs a p	Rs a p	Rs a p	Rs a p	Rs a p	Rs a p	Rs a p	Rs a p
Bangalore..	154 4 7	154 7	120 0 0	437 2 3	437 2 3	437 2 3	120 to 150	120 to 150	120 to 150	160 0 0	160 0 0	160 0 0
Kolar ...	133 0 0	133 0 0	133 0 0	190 0 0	190 0 0	190 0 0	100 0 0	100 0 0	100 0 0	100 0 0	100 0 0	100 0 0
Tumkur ..	*	*	*	*	*	*	25 0 0	25 0 0	*	80 0 0	80 0 0	*
Mysore ...	108 9 1	108 9 1	126 10 8	514 4 6	514 4 6	514 4 6	70 0 0	70 0 0	70 0 0	100 0 0	100 0 0	100 0 0
Hassan ...	164 9 2	164 9 2	164 9 2	164 9 2	164 9 2	164 9 2	30 0 0	20 0 0	30 0 0	100 0 0	80 0 0	100 0 0
Shimoga ...	136 15 8	136 15 8	136 15 8	273 15 4	273 15 4	273 15 4	60 0 0	60 0 0	50 0 0	60 0 0	60 0 0	60 0 0
Kadur ...	193 0 0	193 0 0	193 0 0	2 0 0 per hide.	2 0 0 per hide.	2 0 0 per hide.	40 0 0	40 0 0	40 0 0	60 0 0	60 0 0	60 0 0
Chitaldrug	137 2 3	137 2 3	137 2 3	137 2 3	137 2 3	137 2 3	from 20 to 80 Rs.	from 20 to 80 Rs.	from 20 to 80 Rs	from 80 to 120 Rs. Per	from 80 to 120 Rs. score	from 80 to 120 Rs.

*Articles not available.

Prices Current [Retail] of Food Grains, &c., at the Head-Quarters of the several Districts of the Mysore State during the fortnight ending 15th May 1906.

ಸನ್ 1906ನೆ ಇಸವಿ ಮೇ ಮಾಹೆ 15ನೆ ತಾರೀಖಿಗೆ ಆಖೈರಾದ ಪಂಧ್ರಾವಾಡಾ ಬಾಬತು ಒಟ್ಟುವ್ಯಾಪಾರದ ಚಿಲ್ಲರೆ ಅಂಗಡಿಗಳಲ್ಲಿ ಪುರೋಖ್ತ್‌ಆದ ಆಹಾರ ಜಿನಸಿ ವಗೈರೆನಿರಖುನಾಮಾಡಿಸ್ಟ್ರಿಕ್ಟ್ ಹೆಡ್ ಕ್ವಾರ್ಟರ್‌ಗಳ ಬಾಬತು.

Quantity per rupee by the standard seer of 80 tolas, *vide* Government of India No. 1—21, dated 10th February 1874

ಸನ್ 1874ನೆ ಇಸವಿ ಫೆಬ್ರುವರಿ 10ನೆ ಮುರಕೂಂ 1—21ನೆ ನಂಬರು ಇಂಡಿಯಾ ಗವರ್ನ್‌ಮೆಂಟ್ ಆರ್‌ಡರ್ ಅನುಸರಿಸಿ ರೂಪಾಯಿ ಒಕ್ಕೆ ೮೦ ತೊಲಾ ತೂಕದ ಬಾಬತು ಶೇರುಗಳು

District ಡಿಸ್ಟ್ರಿಕ್ಟ್	Grains and Pulses ಧಾನ್ಯ ಮತ್ತು ಕಾಳುಗಳು																													
	Rice unhusked (paddy) Oryza sativa ಭತ್ತ						Rice, best sort ಅವಲ್ ತರಹೆ ಅಕ್ಕಿ						Rice, common ಸಾಧಾರಣ ಅಕ್ಕಿ						Wheat Triticum sativum ಹೊಟ್ಟೆ ಗೋಧಿ						Barley Hordeum vulgare ಜವೆ ಗೋಧಿ					
	2						3						4						5						6					
	Present fortnight ಸುಜಕ್ಕೂರ್ ಪಂಧ್ರಾವಾಡಾ		Past fortnight ಗುಜಷ್ತಾ ಪಂಧ್ರಾವಾಡಾ		Corresponding fortnight of last year ಗುಜಷ್ತಾ ಸಾಲ್ ಮೊಕಾಬಿಲಾ ಪಂಧ್ರಾವಾಡಾ		Present fortnight ಸುಜಕ್ಕೂರ್ ಪಂಧ್ರಾವಾಡಾ		Past fortnight ಗುಜಷ್ತಾ ಪಂಧ್ರಾವಾಡಾ		Corresponding fortnight of last year ಗುಜಷ್ತಾ ಸಾಲ್ ಮೊಕಾಬಿಲಾ ಪಂಧ್ರಾವಾಡಾ		Present fortnight ಸುಜಕ್ಕೂರ್ ಪಂಧ್ರಾವಾಡಾ		Past fortnight ಗುಜಷ್ತಾ ಪಂಧ್ರಾವಾಡಾ		Corresponding fortnight of last year ಗುಜಷ್ತಾ ಸಾಲ್ ಮೊಕಾಬಿಲಾ ಪಂಧ್ರಾವಾಡಾ		Present fortnight ಸುಜಕ್ಕೂರ್ ಪಂಧ್ರಾವಾಡಾ		Past fortnight ಗುಜಷ್ತಾ ಪಂಧ್ರಾವಾಡಾ		Corresponding fortnight of last year ಗುಜಷ್ತಾ ಸಾಲ್ ಮೊಕಾಬಿಲಾ ಪಂಧ್ರಾವಾಡಾ		Present fortnight ಸುಜಕ್ಕೂರ್ ಪಂಧ್ರಾವಾಡಾ		Past fortnight ಗುಜಷ್ತಾ ಪಂಧ್ರಾವಾಡಾ		Corresponding fortnight of last year ಗುಜಷ್ತಾ ಸಾಲ್ ಮೊಕಾಬಿಲಾ ಪಂಧ್ರಾವಾಡಾ	
	Srs	ch	Srs	ch	Srs	ch	Srs	ch	Srs	ch	Srs	ch	Srs	ch	Srs	ch	Srs	ch	Srs	ch	Srs	ch	Srs	ch	Srs	ch	Srs	ch	Srs	ch
Bangalore ...	15	12	16	10	25	6	6	9	6	14	8	10	7	7	7	12	10	6	9	1	10	4	12	5	*	*	*	*	*	*
Kolar ...	18	0	18	0	20	0	7	0	7	0	8	0	7	8	7	8	9	0	8	0	8	0	10	0	8	0	8	0	10	0
Tumkur ...	18	0	18	0	21	0	6	8	6	8	8	8	8	0	8	0	9	0	7	0	7	0	10	0	7	0	7	0	10	0
Mysore ...	16	12	16	12	17	0	7	0	7	0	9	2	8	0	8	0	10	11	6	4	6	4	10	8	6	4	6	4	*	*
Hassan ...	20	0	18	4	24	0	7	8	7	8	9	0	8	0	8	0	10	0	7	7	7	7	10	0	6	6	7	8	10	0
Shimoga ..	18	14	18	14	25	3	7	6	6	5	8	6	8	6	7	6	11	9	7	6	7	6	11	9	*	*	*	*	*	*
Kadur ..	24	0	24	0	23	0	7	0	7	0	8	0	8	0	8	0	10	0	8	0	8	0	10	0	11	0	11	0	11	0
Chitaldrug ...	16	0	16	0	24	0	7	0	7	0	9	0	8	0	8	0	10	0	8	0	8	0	12	0	8	0	8	0	12	0

* Article not available.

Prices Current [Retail] of Food Grains, &c., at the Head-Quarters of the several Districts of the Mysore State during the fortnight ending 15th May 1906—*contd.*

ಸನ್ 1906ನೆ ಇಸವಿ ಮೇ ಮಾಹೇ 15ನೆ ತಾರೀಖಿಗೆ ಆಖೈರಾದ ಪಂಧ್ರಾವಾಡಾ ಬಾಬತು ಚಿಲ್ಲರೆ ಅಂಗಡಿಗಳಲ್ಲಿ ಸುರೋಖ್ತಾದ ಆಹಾರ ಜಿನಸು ವಗೈರೆ ನಿರಖುನಾಮಾ —ಡಿಸ್ಟ್ರಿಕ್ಟ್ ಹೆಡ್ ಕ್ವಾರ್ಟರ್‌ಗಳ ಬಾಬತು ಸಕೇಪ.

Quantity per rupee by the standard seer of 80 tolas, &c.—*continued.* ರೂ. 1ಕ್ಕೆ 80 ತೊಲಾ ತೂಕದ ಬಾಬತು ಶೇರುಗಳು—ಸಕೇಪ.

Grains and Pulses ಧಾನ್ಯ ಮತ್ತು ಕಾಳುಗಳು

District ಡಿಸ್ಟ್ರಿಕ್ಟ್	Cholam or javar Sorghum vulgare ಜೋಳ 7						Kambu or Bajra Pennisetum typhoideum ಸಜ್ಜೆ 8						Ragi Eleusine coracana ರಾಗಿ 9						Maize Zeamays ಮುಸುಕಿನ ಜೋಳ 10						Bengal gram Cicer arietinum ಕಡಲೆ 11					
	Present fortnight ಪಂಜಕ್ಕೂರಿ ಪಂಧ್ರಾವಾಡಾ		Past fortnight ಗುಜಷ್ತಾ ಪಂಧ್ರಾವಾಡಾ		Corresponding fortnight of last year ಗುಜಷ್ತಾ ಸಾಲ್ ಸೊಕಾಬಿದಾ ಪಂಧ್ರಾವಾಡಾ		Present fortnight ಪಂಜಕ್ಕೂರಿ ಪಂಧ್ರಾವಾಡಾ		Past fortnight ಗುಜಷ್ತಾ ಪಂಧ್ರಾವಾಡಾ		Corresponding fortnight of last year ಗುಜಷ್ತಾ ಸಾಲ್ ಸೊಕಾಬಿದಾ ಪಂಧ್ರಾವಾಡಾ		Present fortnight ಪಂಜಕ್ಕೂರಿ ಪಂಧ್ರಾವಾಡಾ		Past fortnight ಗುಜಷ್ತಾ ಪಂಧ್ರಾವಾಡಾ		Corresponding fortnight of last year ಗುಜಷ್ತಾ ಸಾಲ್ ಸೊಕಾಬಿದಾ ಪಂಧ್ರಾವಾಡಾ		Present fortnight ಪಂಜಕ್ಕೂರಿ ಪಂಧ್ರಾವಾಡಾ		Past fortnight ಗುಜಷ್ತಾ ಪಂಧ್ರಾವಾಡಾ		Corresponding fortnight of last year ಗುಜಷ್ತಾ ಸಾಲ್ ಸೊಕಾಬಿದಾ ಪಂಧ್ರಾವಾಡಾ		Present fortnight ಪಂಜಕ್ಕೂರಿ ಪಂಧ್ರಾವಾಡಾ		Past fortnight ಗುಜಷ್ತಾ ಪಂಧ್ರಾವಾಡಾ		Corresponding fortnight of last year ಗುಜಷ್ತಾ ಸಾಲ್ ಸೊಕಾಬಿದಾ ಪಂಧ್ರಾವಾಡಾ	
	Srs	ch	Srs	ch	Srs	ch	Srs	ch	Srs	ch	Srs	ch	Srs	ch	Srs	ch	Srs	ch	Srs	ch	Srs	ch	Srs	ch	Srs	ch	Srs	ch	Srs	ch
Bangalore	*	*	*	*	*	*	*	*	*	*	*	*	17	0	17	8	19	0	3 maizes for pies.	4	3 maizes for pies.	4	3 maizes for pies.	4	8	6	8	6	12	1
Kolar ...	*	*	*	*	*	*	*	*	*	*	*	*	15	0	15	0	20	0	*	*	*	*	*	*	9	0	9	0	10	0
Tumkur ...	16	0	16	0	21	0	*	*	*	*	*	*	18	0	18	0	20	0	*	*	*	*	*	*	9	0	9	0	10	0
Mysore ...	12	8	12	8	22	8	*	*	*	*	*	*	15	0	15	0	18	0	*	*	*	*	*	*	9	8	9	8	12	1
Hassan ...	*	*	*	*	*	*	*	*	*	*	*	*	16	0	16	0	20	0	*	*	*	*	*	*	8	0	8	0	11	0
Shimoga ...	12	10	12	10	25	3	*	*	*	*	*	*	14	11	14	11	23	2	*	*	*	*	*	*	8	6	7	6	12	10
Kadur ..	17	0	17	0	22	0	*	*	*	*	*	*	16	0	16	0	19	0	*	*	*	*	*	*	8	0	8	0	11	0
Chitaldrug	13	0	13	0	24	0	16	0	16	0	24	0	15	0	15	0	24	0	*	*	*	*	*	*	8	0	8	0	12	0

* Article not available.

Prices Current [Retail] of Food Grains, &c., at the Head-Quarters of the several Districts of the Mysore State during the fortnight ending 15th May 1906.—*contd.*

ಸನ್ 1906ನೆ ಇಸವಿ ಮೇ ಮಾಹೇ 15ನೆ ತಾರೀಖಿಗೆ ಆಖೈರಾದ ಪಂಧ್ರಾವಾಡಾ ಬಾಬತು ಜಿಲ್ಲರೆ ಅಂಗಡಿಗಳಲ್ಲಿ ಪ್ರಚಲಿತ ಆದ ಆಹಾರ ಜಿನಸಿ ವಗೈರೆ ನಿರಖುನಾಮಾ — ಡಿಸ್ಟ್ರಿಕ್ಟ್ ಹೆಡ್ ಕ್ವಾರ್ಟರ್‌ಗಳ ಬಾಬತು — ಸಂಕ್ಷೇಪ.

Quantity per rupee by the standard seer of 80 tolas, &c.—*continued.* ರೂ. 1ಕ್ಕೆ 80 ತೊಲಾ ತೂಕದ ಬಾಬತು ಶೇರುಗಳು — ಸಂಕ್ಷೇಪ.

District ಡಿಸ್ಟ್ರಿಕ್ಟ್	Grains and Pulses ಧಾನ್ಯ ಮತ್ತು ಕಾಳುಗಳು																													
	Horse gram Dolichos biflorus ಹುರಳಿ						Arhar Cajanus indicus ತೊಗರಿ						Arhar Dal ತೊಗರಿ ಬ್ಯಾಳೆ						Kangani Setaria italica ನವಣೆ						Ghee (Clarified butter) ತುಪ್ಪ					
	12						13						14						15						16					
	Present fortnight ಪಂಜಕ್ಕೂರ್ ಪಂಧ್ರಾವಾಡಾ		Past fortnight ಗುಜಷ್ಟಾ ಪಂಧ್ರಾವಾಡಾ		Corresponding fortnight of last year ಗುಜಷ್ಟಾ ಸಾಲ್ ಸೊಕಾಬಿಲಾ ಪಂಧ್ರಾವಾಡಾ		Present fortnight ಪಂಜಕ್ಕೂರ್ ಪಂಧ್ರಾವಾಡಾ		Past fortnight ಗುಜಷ್ಟಾ ಪಂಧ್ರಾವಾಡಾ		Corresponding fortnight of last year ಗುಜಷ್ಟಾ ಸಾಲ್ ಸೊಕಾಬಿಲಾ ಪಂಧ್ರಾವಾಡಾ		Present fortnight ಪಂಜಕ್ಕೂರ್ ಪಂಧ್ರಾವಾಡಾ		Past fortnight ಗುಜಷ್ಟಾ ಪಂಧ್ರಾವಾಡಾ		Corresponding fortnight of last year ಗುಜಷ್ಟಾ ಸಾಲ್ ಸೊಕಾಬಿಲಾ ಪಂಧ್ರಾವಾಡಾ		Present fortnight ಪಂಜಕ್ಕೂರ್ ಪಂಧ್ರಾವಾಡಾ		Past fortnight ಗುಜಷ್ಟಾ ಪಂಧ್ರಾವಾಡಾ		Corresponding fortnight of last year ಗುಜಷ್ಟಾ ಸಾಲ್ ಸೊಕಾಬಿಲಾ ಪಂಧ್ರಾವಾಡಾ		Present fortnight ಪಂಜಕ್ಕೂರ್ ಪಂಧ್ರಾವಾಡಾ		Past fortnight ಗುಜಷ್ಟಾ ಪಂಧ್ರಾವಾಡಾ		Corresponding fortnight of last year ಗುಜಷ್ಟಾ ಸಾಲ್ ಸೊಕಾಬಿಲಾ ಪಂಧ್ರಾವಾಡಾ	
	Srs	ch	Srs	ch	Srs	ch	Srs	ch	Srs	ch	Srs	ch	Srs	ch	Srs	ch	Srs	ch	Srs	ch	Srs	ch	Srs	ch	Srs	ch	Srs	ch	Srs	ch
Bangalore	13	7	15	0	15	10	14	1	15	12	12	15	8	4	8	8	8	8	*	*	*	*	*	*	0	13	0	15	1	2
Kolar ..	14	0	14	0	15	0	*	*	*	*	*	*	9	0	9	0	8	0	*	*	*	*	*	*	1	0	1	0	1	0
Tumkur ...	14	0	14	0	14	0	12	0	12	0	13	0	8	0	8	0	8	0	*	*	*	*	*	*	1	0	1	0	1	0
Mysore ...	12	8	12	8	15	5	12	4	12	4	13	2	10	0	10	0	7	5	*	*	*	*	*	*	2	8	3	4	1	3
Hassan ..	10	0	11	0	12	0	11	0	10	0	11	0	8	0	8	0	8	0	*	*	*	*	*	*	0	12	1	0	1	1
Shimoga ..	11	9	11	9	11	9	12	10	12	10	*	*	8	6	8	6	8	15	12	10	12	10	*	*	0	15	0	15	1	0
Kadur ...	11	0	11	0	12	0	12	0	12	0	12	0	9	0	9	0	8	0	*	*	*	*	*	*	1	3	1	3	1	3
Chitaldrug	11	0	11	0	14	0	14	0	14	0	14	0	8	0	8	0	9	0	20	0	20	0	30	0	1	0	1	0	1	0

*Article not available.

Prices Current [Retail] of Food Grains, &c., at the Head-Quarters of the several Districts of the Mysore State during the fortnight ending 15th May 1906—*contd.*
ಸನ್ 1906ನೆ ಇಸವಿ ಮೇ ಮಾಹೇ 15ನೆ ತಾರೀಖಿಗೆ ಆಖೈರಾದ ಪಂಧ್ರಾವಾಡಾ ಬಾಬತು ಬೆಲ್ಲರೆ ಅಂಗಡಿಗಳಲ್ಲಿ ಫುರೋಖ್ತ್ ಆದ ಆಹಾರಜಿನಸಿ ವಗೈರೆ ನಿರಖುನಾಮಾ—ಡಿಸ್ಟ್ರಿಕ್ಟ್ ಹೆಡ್ ಕ್ವಾರ್ಟರ್‌ಗಳ ಬಾಬತು—ಸಶೇಷ.

Quantity per rupee by the standard seer of 80 tolas, &c.—*continued.* ರೂ. 1ಕ್ಕೆ 80 ತೊಲಾ ತೂಕದ ಬಾಬತು ಶೇರುಗಳು—ಸಶೇಷ.

District ಡಿಸ್ಟ್ರಿಕ್ಟ	Wheat Flour ಗೋಧಿ ಹಿಟ್ಟು 17						Sea Salt ಕಲ್ಲುಪ್ಪು 18						Oil Seeds — Gingelly Sesamum indicum ಎಳ್ಳು 19						Sugar — Goor or jaggory ಬೆಲ್ಲ 20						Fibres — Cotton cleaned Gossypium ಅರಳೆ 21					
	Present fortnight ಪುಜಕ್ಕೂರ್ ಪಂಧ್ರಾವಾಡಾ		Past fortnight ಗುಜಷ್ತಾ ಪಂಧ್ರಾವಾಡಾ		Corresponding fortnight of last year ಗುಜಷ್ತಾ ಸಾಲ್ ಮೊಕಾಬಿಲಾ ಪಂಧ್ರಾವಾಡಾ		Present fortnight ಪುಜಕ್ಕೂರ್ ಪಂಧ್ರಾವಾಡಾ		Past fortnight ಗುಜಷ್ತಾ ಪಂಧ್ರಾವಾಡಾ		Corresponding fortnight of last year ಗುಜಷ್ತಾ ಸಾಲ್ ಮೊಕಾಬಿಲಾ ಪಂಧ್ರಾವಾಡಾ		Present fortnight ಪುಜಕ್ಕೂರ್ ಪಂಧ್ರಾವಾಡಾ		Past fortnight ಗುಜಷ್ತಾ ಪಂಧ್ರಾವಾಡಾ		Corresponding fortnight of last year ಗುಜಷ್ತಾ ಸಾಲ್ ಮೊಕಾಬಿಲಾ ಪಂಧ್ರಾವಾಡಾ		Present fortnight ಪುಜಕ್ಕೂರ್ ಪಂಧ್ರಾವಾಡಾ		Past fortnight ಗುಜಷ್ತಾ ಪಂಧ್ರಾವಾಡಾ		Corresponding fortnight of last year ಗುಜಷ್ತಾ ಸಾಲ್ ಮೊಕಾಬಿಲಾ ಪಂಧ್ರಾವಾಡಾ		Present fortnight ಪುಜಕ್ಕೂರ್ ಪಂಧ್ರಾವಾಡಾ		Past fortnight ಗುಜಷ್ತಾ ಪಂಧ್ರಾವಾಡಾ		Corresponding fortnight of last year ಗುಜಷ್ತಾ ಸಾಲ್ ಮೊಕಾಬಿಲಾ ಪಂಧ್ರಾವಾಡಾ	
	Srs	ch	Srs	ch	Srs	ch	Srs	ch	Srs	ch	Srs	ch	Srs	ch	Srs	ch	Srs	ch	Srs	ch	Srs	ch	Srs	ch	Srs	ch	Srs	ch	Srs	ch
Bangalore	5	15	6	12	8	1	15	8	14	15	12	0	5	4	5	4	6	9	8	0	8	0	6	0	1	14	1	14	1	14
Kolar ..	8	0	8	0	8	0	15	0	15	0	12	0	8	0	8	0	8	0	9	0	9	0	9	0	*	*	*	*	*	*
Tumkur ..	7	0	7	0	8	0	13	0	13	0	12	0	8	0	8	0	8	0	4	0	4	0	4	0	2	0	2	0	2	0
Mysore ...	8	0	8	0	7	4	15	0	15	0	14	11	6	4	6	4	6	2	7	8	7	8	5	4	7	8	7	8	2	4
Hassan ...	7	0	6	0	6	0	14	0	14	0	12	0	6	0	6	0	8	0	6	0	8	0	5	0	2	6	2	6	2	6
Shimoga ..	5	12	5	12	8	6	16	13	16	13	14	11	7	6	7	6	8	6	7	3	7	3	4	13	1	13	1	13	2	3
Kadur ..	6	0	6	0	6	0	14	0	14	0	12	0	8	0	8	0	8	0	5	4	5	4	5	4	1	5	1	5	1	5
Chitaldrug	8	0	8	0	9	0	10	0	10	0	10	0	8	0	8	0	12	0	3	0	3	0	3	0	3	0	3	0	3	0

* Article not available.

703

Prices Current [Retail] of Food Grains, &c., at the Head-Quarters of the several Districts of the Mysore State during the fortnight ending 15th May 1906 —*contd.*

ಸನ್ 1906ನೆ ಇಸವಿ ಮೇ ಮಾಹೇ 15ನೆ ತಾರೀಖಿಗೆ ಆಖೈರಾದ ಪಂಧ್ರಾವಾಡಾ ಬಾಬತು ಜಿಲ್ಲರೆ ಅಂಗಡಿಗಳಲ್ಲಿ ಫುರೋಖ್ತ್ ಆದ ಆಹಾರ ಜಿನಸಿ ವಗೈರೆ ನಿರಖುನಾಮಾ—ಡಿಸ್ಟ್ರಿಕ್ಟ್ ಹೆಡ್ ಕ್ವಾರ್ಟರ್‌ಗಳ ಬಾಬತು—ಸಕೀಪ.

Quantity per rupee by the standard seer of 80 tolas, &c.—*continued.* ರೂ. 1ಕ್ಕೆ 80 ತೊಲಾ ತೂಕದ ಬಾಬತು ಶೇರುಗಳು—ಸಕೀಪ.

District ಡಿಸ್ಟ್ರಿಕ್ಟ್	Drugs and Narcotics						Fodder																		Garden produce											
	Tobacco leaf Nicotiana tabacum and N. rustica ಹೊಗೆಸೊಪ್ಪು						Grass ಹಸೀ ಹುಲ್ಲು						Straw ಮಣಹುಲ್ಲು						Javar stalks ಜೋಳದ ಕಡ್ಡಿ						Turmeric Curcuma longa ಅರಿಶಿನ						Coffee Coffea arabica ಕಾಫಿ					
	22						23						24						25						26						27					
	Present fortnight ಸುಜಕ್ಕರ್ ಪಂಧ್ರಾವಾಡಾ		Past fortnight ಗುಜಷ್ತಾ ಪಂಧ್ರಾವಾಡಾ		Corresponding fortnight of last year ಗುಜಷ್ತಾ ಸಾಲ್ ಸೊಕಾಬಿಲಾ ಪಂಧ್ರಾವಾಡಾ		Present fortnight ಸುಜಕ್ಕರ್ ಪಂಧ್ರಾವಾಡಾ		Past fortnight ಗುಜಷ್ತಾ ಪಂಧ್ರಾವಾಡಾ		Corresponding fortnight of last year ಗುಜಷ್ತಾ ಸಾಲ್ ಸೊಕಾಬಿಲಾ ಪಂಧ್ರಾವಾಡಾ		Present fortnight ಸುಜಕ್ಕರ್ ಪಂಧ್ರಾವಾಡಾ		Past fortnight ಗುಜಷ್ತಾ ಪಂಧ್ರಾವಾಡಾ		Corresponding fortnight of last year ಗುಜಷ್ತಾ ಸಾಲ್ ಸೊಕಾಬಿಲಾ ಪಂಧ್ರಾವಾಡಾ		Present fortnight ಸುಜಕ್ಕರ್ ಪಂಧ್ರಾವಾಡಾ		Past fortnight ಗುಜಷ್ತಾ ಪಂಧ್ರಾವಾಡಾ		Corresponding fortnight of last year ಗುಜಷ್ತಾ ಸಾಲ್ ಸೊಕಾಬಿಲಾ ಪಂಧ್ರಾವಾಡಾ		Present fortnight ಸುಜಕ್ಕರ್ ಪಂಧ್ರಾವಾಡಾ		Past fortnight ಗುಜಷ್ತಾ ಪಂಧ್ರಾವಾಡಾ		Corresponding fortnight of last year ಗುಜಷ್ತಾ ಸಾಲ್ ಸೊಕಾಬಿಲಾ ಪಂಧ್ರಾವಾಡಾ		Present fortnight ಸುಜಕ್ಕರ್ ಪಂಧ್ರಾವಾಡಾ		Past fortnight ಗುಜಷ್ತಾ ಪಂಧ್ರಾವಾಡಾ		Corresponding fortnight of last year ಗುಜಷ್ತಾ ಸಾಲ್ ಸೊಕಾಬಿಲಾ ಪಂಧ್ರಾವಾಡಾ	
	Srs	ch	Srs	ch	Srs	ch	Srs	ch	Srs	ch	Srs	ch	Srs	ch	Srs	ch	Srs	ch	Srs	ch	Srs	ch	Srs	ch	Srs	ch	Srs	ch	Srs	ch	Srs	ch	Srs	ch	Srs	ch
Bangalore ...	1	5	1	5	1	4	45	0	45	0	54	0	48	0	48	0	60	0	*	*	*	*	*	*	3	6	3	6	6	0	1	4	1	2	1	2
Kolar	2	8	2	8	2	8	75	0	75	0	75	0	50	0	50	0	50	0	*	*	*	*	*	*	4	0	4	0	4	0	1	0	1	0	1	0
Tumkur	2	6	2	0	1	8	80	0	80	0	80	0	32	0	32	0	32	0	*	*	*	*	*	*	4	0	4	0	4	0	1	0	1	0	1	0
Mysore ...	3	12	3	12	1	3	120	0	120	0	80	0	140	0	140	0	170	0	100	0	100	0	90	0	12	0	12	0	5	4	5	0	5	0	1	2
Hassan ...	2	6	2	6	2	6	240	0	240	0	240	0	120	0	120	0	120	0	*	*	*	*	*	*	4	0	4	0	6	0	1	5	1	8	1	8
Shimoga ..	2	6	2	6	2	6	*	*	*	*	*	*	112	0	112	0	224	0	*	*	*	*	*	*	3	0	3	0	4	13	1	10	1	10	1	8
Kadur ..	1	5	1	5	1	5	*	*	*	*	*	*	17	9	17	9	17	9	*	*	*	*	*	*	2	10	2	10	2	10	1	3	1	3	1	3
Chitaldrug ..	3	0	3	0	3	0	*	*	*	*	*	*	30	0	30	0	60	0	30	0	30	0	3	0	3	0	3	0	3	0	1	0	1	0	1	0

* Article not available.

Prices Current [Retail] of Food Grains, &c., at the Head-Quarters of the several Districts of the Mysore State during the fortnight ending 15th May 1906—*concld.*

ಸನ 1906ನೆ ಇಸವಿ ಮೇ ಮಾಹೆ 15ನೆ ತಾರೀಖಿಗೆ ಆಖೈರಾದ ಪಂಧ್ರಾವಾಡಾ ಬಾಬತು ಚೆಲ್ಲರೆ ಅಂಗಡಿಗಳಲ್ಲಿ ಫುರೋಖ್ತಾದ ಆಹಾರಜಿನಸಿ ವಗೈರೆ ನಿರಖುನಾಮಾ—ಡಿಸ್ಟ್ರಿಕ್ಟ್ ಹೆಡ್ ಕ್ವಾರ್ಟರಿಗಳ ಬಾಬತು-ಸಮಾಪ್ತಿ

Quantity per rupee by the standard seer of 80 tolas, &c.—*concluded*

ರೂ. 1ಕ್ಕೆ 80 ತೊಲಾ ತೂಕದ ಬಾಬತು ಶೇರುಗಳು—ಸಮಾಪ್ತಿ

District ಡಿಸ್ಟ್ರಿಕ್ಟ್	Garden produce. Cardamom Amomum Aromaticum ಯಾಲಕ್ಕಿ 28						Garden produce. Supari Areca catechu ಅಡಿಕೆ 29						Garden produce. Dry cocoanut Cocos nucifera ಕೊಬರಿ 30						Hides (cattle) ದನವಿನ ಚರ್ಮ 31						Plough bullocks (pair) ಉಳೋ ಎತ್ತುಗಳು ಜೊತೆ 1ಕ್ಕೆ 32			Sheep (score) ಕುರಿಗಳು 20ಕ್ಕೆ 33		
	Present fortnight ಪ್ರಸ್ತುತದ ಪಂಧ್ರಾವಾಡಾ		Past fortnight ಗುಜಿಷ್ತಾ ಪಂಧ್ರಾವಾಡಾ		Corresponding fortnight of last year ಗುಜಿಷ್ತಾ ಸಾಲ್ ಮೊಕಾಬಿಲಾ ಪಂಧ್ರಾವಾಡಾ		Present fortnight ಪ್ರಸ್ತುತದ ಪಂಧ್ರಾವಾಡಾ		Past fortnight ಗುಜಿಷ್ತಾ ಪಂಧ್ರಾವಾಡಾ		Corresponding fortnight of last year ಗುಜಿಷ್ತಾ ಸಾಲ್ ಮೊಕಾಬಿಲಾ ಪಂಧ್ರಾವಾಡಾ		Present fortnight ಪ್ರಸ್ತುತದ ಪಂಧ್ರಾವಾಡಾ		Past fortnight ಗುಜಿಷ್ತಾ ಪಂಧ್ರಾವಾಡಾ		Corresponding fortnight of last year ಗುಜಿಷ್ತಾ ಸಾಲ್ ಮೊಕಾಬಿಲಾ ಪಂಧ್ರಾವಾಡಾ		Present fortnight ಪ್ರಸ್ತುತದ ಪಂಧ್ರಾವಾಡಾ		Past fortnight ಗುಜಿಷ್ತಾ ಪಂಧ್ರಾವಾಡಾ		Corresponding fortnight of last year ಗುಜಿಷ್ತಾ ಸಾಲ್ ಮೊಕಾಬಿಲಾ ಪಂಧ್ರಾವಾಡಾ		Present fortnight ಪ್ರಸ್ತುತದ ಪಂಧ್ರಾವಾಡಾ	Past fortnight ಗುಜಿಷ್ತಾ ಪಂಧ್ರಾವಾಡಾ	Corresponding fortnight of last year ಗುಜಿಷ್ತಾ ಸಾಲ್ ಮೊಕಾಬಿಲಾ ಪಂಧ್ರಾವಾಡಾ	Present fortnight ಪ್ರಸ್ತುತದ ಪಂಧ್ರಾವಾಡಾ	Past fortnight ಗುಜಿಷ್ತಾ ಪಂಧ್ರಾವಾಡಾ	Corresponding fortnight of last year ಗುಜಿಷ್ತಾ ಸಾಲ್ ಮೊಕಾಬಿಲಾ ಪಂಧ್ರಾವಾಡಾ
	Srs	ch	Srs	ch	Srs	ch	Srs	ch	Srs	ch	Srs	ch	Srs	ch	Srs	ch	Srs	ch	Srs	ch	Srs	ch	Srs	ch	Rs a p	Rs a p	Rs a p	Rs a p	Rs a p	Rs a p
Bangalore	0	4	0	4	0	3	1	4	1	4	1	6	2	6	2	6	3	3	0	15	0	15	0	15	120 to 150	120 to 150	120 to 150	160 0 0	160 0 0	160 0 0
Kolar	0	4	0	4	0	4	1	0	1	0	1	0	3	0	3	0	3	0	2	0	2	0	2	0	100 0 0	100 0 0	100 0 0	100 0 0	100 0 0	100 0 0
Tumkur	0	2	0	2	0	2	1	4	1	4	1	4	3	0	3	0	2	8	1	0	1	0	1	0	40 0 0	40 0 0	40 0 0	100 0 0	100 0 0	80 0 0
Mysore	2	0	2	0	0	4	4	4	4	4	1	9	2	10	2	10	1	14	0	10	0	10	0	13	70 0 0	70 0 0	70 0 0	100 0 0	100 0 0	100 0 0
Hassan	0	6	0	6	0	7	2	0	2	6	2	6	2	8	2	8	2	8	2	8	2	8	2	8	30 0 0	20 0 0	30 0 0	100 0 0	80 0 0	100 0 0
Shimoga	0	6	0	6	0	10	1	8	1	8	1	3	3	0	3	0	3	0	1	8	1	8	1	8	60 0 0	60 0 0	50 0 0	60 0 0	60 0 0	60 0 0
Kadur	0	6	0	6	0	3	1	3	1	3	1	3	2	1	2	1	2	1	Rs a p 2 0 0		Rs a p 2 0 0		Rs a p 2 0 0 per hide		40 0 0	40 0 0	40 0 0	60 0 0	60 0 0	60 0 0
Chitaldrug	0	1/8	0	1/8	0	1/8	2	0	2	0	2	0	3	0	3	0	3	0	3	0	3	0	3	0	From 20 to 80 Rs.	From 20 to 80 Rs.	From 20 to 80 Rs.	From 80 to 120 Rs.	From 80 to 120 Rs.	From 80 to 120 Rs

By Order,

B. K. VENKATA VARADA IYENGAR,

Secy. to Govt. Gen. & Rev. Dept.

Prices-Current [*Retail*] of Food Grains and Salt in the Mysore State during the fortnight ending the 15th May 1906.

Quantity per rupee in seer of 80 tolas, *vide* Government of India No. 1 – 21, dated 10th February 1874

Fortnight ending.	No.	District.	Wheat.						Barley.						Rice, best sort.						Rice, common						Javar or cholam (*Sorghum valgare*).						Bajra or kambu (*Pennisetum typhoideum.*)						Marua or ragi (*Eleusine Corocana.*)					
			Present return.		Next preceding return.		Corresponding return of last year.		Present return.		Next preceding return		Corresponding return of last year.		Present return.		Next preceding return.		Corresponding return of last year.		Present return.		Next preceding return.		Corresponding return of last year.		Present return		Next preceding return.		Corresponding return of last year.		Present return		Next preceding return.		Corresponding return of last year.		Present return.		Next preceding return.		Corresponding return of last year.	
1		2	3		4		5		6		7		8		9		10		11		12		13		14		15		16		17		18		19		20		21		22		23	
			S.	c.	S.	c.	S.	c.	S.	c.	S.	c.	S.	c.	S.	c.	S.	c.	S.	c.	S.	c.	S.	c.	S.	c.	S.	c.	S.	c.	S.	c.	S	c.	S	c.	S.	c.	S.	c.	S.	c.	S.	c.
15th May 1906.	1	Bangalore.	9	1	10	4	12	5	*	*	*	*	*	*	6	9	6	14	8	10	7	7	7	12	10	6	*	*	*	*	*	*	*	*	*	*	*	*	17	6	17	8	19	0
	2	Kolar ...	8	0	8	0	10	0	8	0	8	0	10	0	7	0	7	0	8	0	7	8	7	8	9	0	*	*	*	*	*	*	*	*	*	*	*	*	15	0	15	0	20	0
	3	Tumkur ..	7	0	7	0	10	0	7	0	7	0	10	0	6	8	6	8	8	8	8	0	8	0	9	0	16	0	16	0	21	0	*	*	*	*	*	*	18	0	18	0	20	0
	4	Mysore ...	6	4	6	4	10	8	6	4	6	4	*	*	7	0	7	0	9	2	8	0	8	0	10	11	12	8	12	8	22	8	*	*	*	*	*	*	15	0	15	0	18	0
	5	Hassan ...	7	7	7	7	10	0	6	6	7	8	10	0	7	8	7	8	9	0	8	0	8	0	10	0	*	*	*	*	*	*	*	*	*	*	*	*	16	0	16	0	20	0
	6	Shimoga...	7	6	7	6	11	9	*	*	*	*	*		7	6	6	5	8	6	8	6	7	6	11	9	12	10	12	10	25	3	*	*	*	*	*	*	14	11	14	11	23	2
	7	Kadur ...	8	0	8	0	10	0	11	0	11	0	11	0	7	0	7	0	8	0	8	0	8	0	10	0	17	0	17	0	22	0	*	*	*	*	*	*	16	0	16	0	19	0
	8	Chitaldrug	8	0	8	0	12	0	8	0	8	0	12	0	7	0	7	0	9	0	8	0	8	0	10	0	13	0	13	0	24	0	16	0	16	0	24	0	15	0	15	0	24	0
		Average .	7	10	7	13	10	13	7	12	7	15	10	10	7	0	6	14	8	9	7	15	7	13	10	1	14	4	14	4	22	15	16	0	16	0	24	0	15	13	15	14	20	6

* Article not available.

Prices-Current [*Retail*] of Food Grains and Salt in the Mysore State during the fortnight ending the 15th May 1906—*concluded*.

Fortnight ending.	No.	District.	Quantity per rupee in seer of 80 tolas, *vide* Government of India No. 1—21, dated 10th February 1874.																												Remarks
			Kangni or kakum Italian millet (*Setaria Italica.*)						Gram, chonna, chola, kadale or sunage (*Cicer Arietinum.*)						Indian-corn or maize (*Zea Mays.*)						Arhar or Thur-cadjan pea (*Cajanus Indicus.*)						Arhar Dal.						Salt.						
			Present return.		Next preceding return.		Corresponding return of last year		Present return.		Next preceding return		Corresponding return of last year.		Present return.		Next preceding return.		Corresponding return of last year.		Present return.		Next preceding return.		Corresponding return of last year.		Present return.		Next preceding return.		Corresponding return of last year.		Present return.		Next preceding return.		Corresponding return of last year.		
			24		25		26		27		28		29		30		31		32		33		34		35		36		37		38		39		40		41		42
			S.	c.	S.	c.	S.	c.	S.	c.	S.	c.	S.	c.	S.	c.	S.	c.	S.	c.	S.	c.	S.	c.	S.	c.	S.	c.	S.	c.	S.	c.	S.	c.	S.	c.	S.	c.	
15th May 1906.	1	Bangalore	*	*	*	*	*	*	8	6	8	6	12	1	3 maizes for 4 pies.		3 maizes for 4 pies.		3 maizes for 4 pies.		14	1	15	12	12	15	8	4	8	8	8	8	15	8	14	15	12	10	
	2	Kolar ...	*	*	*	*	*	*	9	0	9	0	10	0	*	*	*	*	*	*	*	*	*	*	*	*	9	0	9	0	8	0	15	0	15	0	12	0	
	3	Tumkur .	*	*	*	*	*	*	9	0	9	0	10	0	*	*	*	*	*	*	12	0	12	0	13	0	8	0	8	0	8	0	13	0	13	0	12	0	
	4	Mysore ...	*	*	*	*	*	*	9	8	9	8	12	1	*	*	*	*	*	*	12	4	12	4	13	2	10	0	10	0	7	5	15	0	15	0	14	11	
	5	Hassan ..	*	*	*	*	*	*	8	0	8	0	11	0	*	*	*	*	*	*	11	0	10	0	11	0	8	0	8	0	8	0	14	0	14	0	12	0	
	6	Shimoga ..	*	*	*	*	*	*	8	6	7	6	12	10	*	*	*	*	*	*	12	10	12	10	*	*	8	6	8	6	8	15	16	13	16	13	14	11	
	7	Kadur ...	*	*	*	*	*	*	8	0	8	0	11	0	*	*	*	*	*	*	12	0	12	0	12	0	9	0	9	0	8	0	14	0	14	0	12	0	
	8	Chitaldrug	20	0	20	0	30	0	8	0	8	0	12	0	*	*	*	*	*	*	14	0	14	0	14	0	8	0	8	0	9	0	10	0	10	0	10	0	
		Average...	20	0	20	0	30	0	8	0	8	6	11	6	3 maizes for 4 pies.		3 maizes for 4 pies.		3 maizes for 4 pies.		12	9	12	11	12	11	8	9	8	10	8	3	14	3	14	1	12	8	

* Article not available.

GOVT. OF H. H. THE MAHARAJA OF MYSORE, GENL. AND REV. SECRETARIAT,
Dated Bangalore, the 31st May 1906.

By Order,
B. K. VENKATA VARADA IYENGAR,
Secy. to Govt., Gen. & Rev. Dept.

708

RAINFALL TABLE OF THE MYSORE STATE

For the month of April 1906.

Rainfall Table of the Mysore State

Meteorological Division	District	Station	1	2	3	4	5	6	7	8	9	10	11	12	13	14	15	16	17	18	19	20	21
MYSORE	Bangalore	Bangalore	...	...	...	...	...	...	...	...	...	...	...	...	...	...	...	...	...	...	0·06	...	...
		Hoskote	...	...	...	...	...	...	...	...	...	...	...	...	...	...	...	...	...	...	0·07	...	...
		Dodballapur	...	...	...	...	...	...	...	...	...	...	...	...	...	...	...	...	...	...	...	...	...
		Nelamangala	...	...	...	...	...	...	...	...	...	...	...	...	...	...	...	...	...	...	...	...	...
		Kankanhalli	...	...	...	...	...	...	...	...	...	...	...	...	...	...	...	...	...	...	0·27	...	...
		Magadi	...	...	...	...	...	...	...	...	...	...	...	...	...	...	...	...	...	...	...	...	...
		Closepet	...	...	...	...	...	...	0·15	...	...	...	...	...	...	...	...	...	...	...	...	0·66	0·01
		Anekal	...	...	...	...	...	...	...	...	...	...	...	...	...	...	...	...	...	...	...	0·17	...
		Devanhalli	...	...	...	...	...	...	...	...	...	...	...	...	...	...	...	...	...	...	...	...	...
		Channapatna	...	...	...	...	...	...	...	...	...	...	...	...	...	...	...	...	...	...	...	0·15	0·68
	Kolar	Kolar	...	...	...	...	...	...	...	...	...	...	...	...	...	...	...	...	...	...	0·03	...	...
		Bowringpet	...	...	...	...	...	...	...	...	...	...	...	...	...	...	...	...	...	...	0·34	...	0·62
		Chintamani	...	...	...	...	...	...	...	...	...	...	...	...	...	...	...	...	...	...	...	...	...
		Mulbagal	...	...	...	...	0·27	...	...	...	...	...	...	...	...	...	...	...	...	...	0·39	...	...
		Sidlaghatta	...	...	...	...	...	...	...	...	...	...	...	...	...	...	...	...	...	...	...	...	...
		Chikballapur	...	...	...	...	0·29	...	...	...	...	...	...	...	...	...	...	...	...	...	...	...	...
		Bagepalli	...	...	...	...	...	...	...	...	...	...	...	...	...	...	...	...	...	...	...	...	...
		Goribidnur	...	...	...	...	...	...	...	...	...	...	...	...	...	...	...	...	...	...	0·39	...	...
		Malur	...	...	...	...	...	...	...	...	...	...	...	...	...	...	...	...	...	...	0·52	...	0·27
		Srinivaspur	...	...	...	...	...	...	...	...	...	...	...	...	...	...	...	...	...	...	...	...	...
		Gudibanda	...	...	...	...	...	...	...	...	...	...	...	...	...	...	...	...	...	...	...	...	...
	Tumkur	Tumkur	...	...	...	0·04	...	...	...	...	...	...	...	...	...	...	...	...	...	...	...	...	...
		Maddagiri	...	...	...	...	...	...	...	...	...	...	...	...	...	...	...	...	...	...	...	...	...
		Chiknayakanhalli	...	...	...	...	...	...	...	...	...	...	...	...	...	...	...	...	...	...	...	...	...
		Sira	...	...	...	...	...	...	...	...	...	...	...	...	...	...	...	...	...	...	...	...	...
		Gubbi	...	...	...	...	...	...	...	...	...	...	...	...	...	...	...	...	...	...	...	...	...
		Tiptur	...	...	...	...	...	...	...	...	...	...	...	...	...	...	...	...	...	...	...	...	...
		Pavagada	...	...	...	...	...	...	...	...	...	...	...	...	...	...	...	...	...	...	...	...	...
		Kunigal	...	...	...	...	...	...	...	...	...	...	...	...	...	...	...	...	...	...	...	...	...
		Koratagere	...	...	...	...	...	...	...	...	...	...	...	...	...	...	...	...	...	...	...	...	...
		Turuvekere	...	...	...	0·22	...	...	...	...	...	...	...	...	...	...	...	...	...	...	...	...	...
	Mysore	Mysore	...	...	...	...	...	...	0·07	...	...	...	...	...	...	...	...	...	...	...	...	...	...
		Chamrajnagar	...	...	...	...	...	...	...	...	...	...	...	...	...	...	...	...	...	...	0·05	...	...
		Seringapatam	...	...	...	...	...	...	0·35	...	...	...	...	...	...	...	...	...	...	...	...	...	...
		Hunsur	...	...	...	...	...	...	0·03	...	...	...	...	...	...	...	...	...	...	...	...	...	...
		Yedatore	...	...	...	...	...	...	...	...	...	...	...	...	...	...	...	...	...	...	...	...	...
		Heggaddevankote	...	...	...	...	...	...	...	...	...	...	...	...	...	...	...	...	...	...	...	...	...
		Gundlupet	...	...	...	...	...	...	...	...	...	...	...	...	...	...	...	...	...	...	0·19	...	...
		Nanjangud	...	...	...	...	...	...	0·10	...	...	...	...	...	...	...	...	...	...	...	...	...	...
		T.-Narsipur	...	...	...	...	...	...	...	...	...	...	...	...	...	...	...	...	...	...	...	...	...
		Malvalli	...	...	...	...	...	...	...	...	...	...	...	...	...	...	...	...	...	...	0·28	...	...
		Mandya	...	...	...	...	...	...	...	...	...	...	...	...	...	...	...	...	...	...	0·19	...	...
		Krishnarajpete	...	...	...	...	...	...	...	...	...	...	...	...	...	...	...	...	...	...	...	...	...
		Nagamangala	...	...	...	...	...	...	...	...	...	...	...	...	...	...	...	...	...	...	...	...	...
	Hassan	Hassan	...	...	...	...	...	...	...	...	...	...	...	...	...	...	...	...	...	...	...	...	...
		Manjarabad	...	...	...	...	...	...	...	...	...	...	...	...	...	...	...	...	...	...	...	...	...
		Arkalgud	...	...	...	1·65	...	...	...	...	...	...	...	...	...	...	...	...	...	...	...	...	...
		Belur	...	...	...	...	...	...	...	...	...	...	...	...	...	...	...	...	...	...	...	...	...
		Channarayapatna	...	...	...	1·00	...	...	...	...	...	...	...	...	...	...	...	...	...	...	...	...	...
		Arsikere	...	...	...	...	...	...	...	...	...	...	...	...	...	...	...	...	...	...	...	...	...
		Holé-Narsipur	...	...	...	0·74	...	...	...	...	...	...	...	...	...	...	...	...	...	...	...	...	...
		Alur	...	...	...	...	...	...	...	...	...	...	...	...	...	...	...	...	...	...	...	...	...
	Shimoga	Shimoga	...	...	...	...	...	...	...	...	...	...	...	...	...	...	...	...	...	...	...	...	...
		Channagiri	...	...	...	...	...	...	...	...	...	...	...	...	...	...	...	...	...	...	...	...	...
		Honnali	...	...	...	...	...	...	...	...	...	...	...	...	...	...	...	...	...	...	...	...	...
		Shikarpur	...	...	...	...	...	...	...	...	...	...	...	...	...	...	...	...	...	...	...	...	...
		Sorab	...	...	...	...	...	...	...	...	...	...	...	...	...	...	...	...	...	...	...	...	...
		Sagar	...	...	...	...	...	...	...	...	...	...	...	...	...	...	...	...	...	...	...	...	...
		Nagar	...	...	...	...	...	...	...	...	...	...	...	...	...	...	...	...	...	...	...	...	...
		Tirthahalli	...	...	...	...	...	...	...	...	...	...	...	...	...	...	...	...	...	...	...	...	...
		Kumsi	...	...	...	...	...	...	...	...	...	...	...	...	...	...	...	...	...	...	...	...	...
	Kadur	Chikmagalur	...	...	...	...	...	...	...	...	...	...	...	...	...	...	...	0·07	...	...	...	...	...
		Kadur	...	...	...	...	...	...	...	...	...	...	...	...	...	...	...	...	...	...	...	...	...
		Tarikere	...	...	...	...	...	...	...	...	...	...	...	...	...	...	...	...	...	...	...	...	...
		Koppa	...	...	...	...	...	...	...	...	...	...	...	...	...	...	...	...	...	...	...	...	...
		Mudgere	...	...	...	...	...	...	...	...	...	...	...	...	...	...	...	...	...	...	...	...	...
		Yedahalli	...	...	...	...	...	...	...	...	...	...	...	...	...	...	...	...	...	...	...	...	...
		Sringeri	...	...	...	...	...	...	...	...	...	...	...	...	...	...	...	...	...	...	...	...	...
	Chitaldrug	Chitaldrug	...	...	...	...	...	...	...	...	...	...	...	...	...	...	...	...	...	...	...	...	...
		Challakere	...	...	...	...	...	...	...	...	...	...	...	...	...	...	...	...	...	...	...	...	...
		Hiriyur	...	...	...	...	...	...	...	...	...	...	...	...	...	...	...	...	...	...	...	...	...
		Holalkere	...	...	...	...	...	...	...	...	...	...	...	...	...	...	...	...	...	...	...	...	...
		Davangere	...	...	...	...	...	...	...	...	...	...	...	...	...	...	...	...	...	...	...	...	...
		Molakalmuru	...	...	...	...	...	...	...	...	...	...	...	...	...	...	...	...	...	...	...	...	...
		Jagalur	...	...	...	...	...	...	...	...	...	...	...	...	...	...	...	...	...	...	...	...	...
		Hosdurga	...	...	...	...	...	...	...	...	...	...	...	...	...	...	...	...	...	...	...	...	...
		Harihar	...	...	...	...	...	...	...	...	...	...	...	...	...	...	...	...	...	...	...	...	...

GOVT. OF H. H. THE MAHARAJA OF MYSORE,
GEN. AND REV. SECRETARIAT,
Bangalore, the 2nd June 1906.

for the month of April 1906.

22	23	24	25	26	27	28	29	30	31	No. of rainy days in April		Total rainfall for the month of April		Heaviest rainfall for the month of April 1906	Total rainfall from 1st April to 30th April		Station		Meteorological Division
										1906	20 years' average	1906	20 years' average		1906	20 years' average		District	
...	...	...	...	...	...	...	...	...	...	...	2·1	0·06	1·05	0·06	0·06	1·05	Bangalore		MYSORE.
...	...	...	...	...	...	...	...	...	...	...	1·1	0·07	0·51	0·07	0·07	0·51	Hoskote ...	Bangalore	
...	...	...	...	...	...	...	...	...	...	...	1·1	...	0·59	...	...	0·59	Dodballapur ...		
...	...	...	...	...	...	...	...	...	...	...	1·0	...	0·44	...	...	0·44	Nelamangala ...		
...	...	...	...	...	...	...	...	...	...	1	1·9	0·27	0·93	0·27	0·27	0·93	Kankanhalli ...		
...	...	...	...	...	...	...	...	...	...	...	1·9	...	1·12	...	...	1·12	Magadi ...		
...	...	...	...	...	...	...	...	...	...	2	1·8	0·82	0·74	0·66	0·82	0·74	Closepet ...		
...	...	...	...	...	...	...	...	...	...	1	1·7	0·17	0·92	0·17	0·17	0·92	Anekal ...		
...	...	...	...	...	...	...	...	...	...	...	1·1	...	0·51	...	...	0·51	Devanhalli ...		
...	...	...	...	...	...	...	...	...	...	1	2·2	0·23	1·11	0·15	0·23	1·11	Channapatna ...		
											Average	**0·16**							
...	...	...	...	...	...	...	...	...	...		1·6	0·03	1·23	0·03	0·03	1·23	Kolar ..	Kolar	
...	...	...	...	...	...	...	...	...	...	1	1·5	0·36	0·87	0·34	0·36	0·87	Bowringpet ...		
...	...	...	...	...	...	...	...	...	...	...	1·6	...	0·71			0·71	Chintamani ...		
...	...	...	...	...	...	...	...	...	...	2	1·3	0·66	0·79	0·39	0·66	0·79	Mulbagal ...		
...	...	...	...	...	...	...	...	...	...	...	0·6	...	0·42	...	...	0·42	Sidlaghatta ...		
...	...	...	...	...	...	...	...	...	...	1	1·3	0·29	0·67	0·29	0·29	0·67	Chikballapur ...		
...	...	...	...	...	...	...	...	...	...	...	0·5	...	0·37	...	...	0·37	Bagepalli ...		
...	...	...	...	...	...	...	...	...	...	...	0·7	...	0·43	...	...	0·43	Goribidnur ...		
...	...	...	...	...	...	...	...	...	...	1	1·1	0·39	0·76	0·39	0·39	0·76	Malur ...		
...	...	...	...	...	...	...	...	...	...	2	0·9	0·79	0·57	0·52	0·79	0·57	Srinivaspur		
...	...	...	...	...	...	...	...	...	...	...	0·7	...	0·32	...	...	0·32	Gudibanda ...		
											Average	**0·23**							
...	...	...	...	...	...	...	...	...	...	...	2·1	0·04	0·99	0·04	0·04	0·99	Tumkur .	Tumkur	
...	...	...	...	...	...	...	...	...	...	...	0·8	...	0·41	...	...	0·41	Maddagiri ..		
...	...	...	...	...	...	...	...	...	...	...	1·9	...	0·69	...	..	0·69	Chiknayakanhalli		
...	...	...	...	...	...	...	...	...	...	...	1·0	...	0·47	...	...	0·47	Sira .		
...	...	...	...	...	...	...	...	...	...	...	2·1	...	1·55	...	..	1·55	Gubbi ...		
...	...	...	...	...	...	...	...	...	...	...	2·1	...	1·86	...	...	1·86	Tiptur ...		
...	...	...	...	...	...	...	...	...	...	...	0·9	...	0·66	...		0·66	Pavagada ...		
...	...	...	...	...	...	...	...	...	...	...	1·6	...	0·96	...	...	0·96	Kunigal ...		
...	...	...	...	...	...	...	...	...	...	...	1·2		0·73	...	..	0·73	Koratagere ...		
...	...	...	...	...	...	...	...	...	...	1	2·2	0·22	1·24	0·22	0·22	1·24	Turuvekere ...		
											Average	**0·03**							
...	...	...	...	...	...	...	...	...	...	...	3·6	0·07	1·57	0·07	0·07	1·57	Mysore	Mysore	
...	...	...	...	...	...	...	...	...	...	...	3·2	0·05	1·13	0·05	0·05	1·13	Chamrajnagar ...		
...	...	...	...	...	...	...	...	...	...	1	2·8	0·35	1·40	0·35	0·35	1·40	Seringapatam ...		
...	...	...	...	...	...	...	...	0·37	...	1	4·1	0·40	1·90	0·40	0·40	1·90	Hunsur ...		
...	...	0·78	...	...	...	...	...	...	...	1	3·0	0·78	1·97	0·78	0·78	1·97	Yedatore ...		
...	...	...	...	...	...	...	...	...	...	...	2·8	...	1·53	...	..	1·53	Heggaddevankote		
...	...	...	...	...	...	...	...	0·08	...	1	4·9	0·27	2·77	0·19	0·27	2·77	Gundlupet ...		
...	...	0·16	...	...	...	...	...	...	...	2	3·8	0·26	1·83	0·16	0·26	1·83	Nanjangud ...		
...	...	...	...	...	...	...	...	...	...	...	3·9	...	2·12	...	...	2·12	T.-Narsipur ...		
...	...	...	...	...	...	...	...	...	...	1	2·8	0·28	1·15	0·28	0·28	1·15	Malvalli ..		
...	...	...	...	...	...	...	...	...	...	1	2·6	0·19	1·31	0·19	0·19	1·31	Mandya ...		
...	...	1·05	...	...	...	...	...	...	...	1	3·8	1·05	2·18	1·05	1·05	2·18	Krishnarajpete...		
...	...	...	...	...	...	...	...	...	...	...	2·8	...	1·22	...	...	1·22	Nagamangala ...		
											Average	**0·28**							
...	...	...	...	...	...	...	...	0·17	...	1	4·4	0·17	1·89	0·17	0·17	1·89	Hassan ...	Hassan	
...	...	0·03	...	...	...	...	...	...	...		4·6	0·03	2·00	0·03	0·03	2·00	Manjarabad ...		
...	...	...	...	...	...	...	...	0·10	...	2	3·6	1·75	1·64	1·65	1·75	1·64	Arkalgud ...		
...	...	0·23	...	...	...	...	...	0·51	...	2	3·2	0·74	1·41	0·51	0·74	1·41	Belur ...		
...	...	...	...	...	...	...	...	...	...	1	3·0	1·00	1·24	1·00	1·00	1·24	Channarayapatna		
...	...	...	...	...	...	...	...	...	...	...	3·0	...	1·66	...	...	1·66	Arsikere ...		
...	...	...	...	...	...	...	...	...	...	1	3·5	0·74	1·99	0·74	0·74	1·99	Holé-Narsipur ...		
...	...	...	...	...	...	...	...	...	...	...	...	...	...	...	...	...	Alur ...		
											Average	**0·55**							
...	...	...	...	...	...	...	...	...	...	...	3·4	...	1·90	...	...	1·90	Shimoga	Shimoga	
...	...	...	...	...	...	...	...	...	...	...	2·3		1·49	...	...	1·49	Channagiri ...		
...	...	...	...	...	...	...	...	...	...		2·3	...	1·47	...	...	1·47	Honnali ...		
...	...	...	...	...	...	...	...	...	...	...	2·2	...	0·99	...	...	0·99	Shikarpur ...		
...	...	...	...	...	...	...	...	...	...	...	1·9	...	1·02	...	...	1·02	Sorab ...		
...	...	...	...	...	...	...	0·40	...	...	1	3·3	0·40	1·85	0·40	0·40	1·85	Sagar ...		
...	...	...	...	...	...	...	...	...	...	...	1·5	...	0·70	...	...	0·70	Nagar ...		
...	...	...	...	...	...	...	...	...	...	...	3·1	...	1·41	...	...	1·41	Tirthahalli ...		
...	...	...	...	...	...	...	...	...	...	...	3·8	...	2·49	...	...	2·49	Kumsi ..		
											Average	**0·04**							
...	...	...	...	...	...	...	...	0·18	...	2	3·7	0·25	1·77	0·18	0·25	1·77	Chikmagalur	Kadur	
...	...	...	...	...	...	...	...	0·19	...	1	2·1	0·19	1·04	0·19	0·19	1·04	Kadur .		
...	...	...	...	...	...	...	...	...	...	...	1·8	...	0·72	...	...	0·72	Tarikere ..		
...	...	...	...	...	...	...	...	...	...	...	3·2	...	1·61	...	...	1·61	Koppa ...		
...	...	...	...	...	...	...	...	0·55	...	1	5·5	0·55	2·31	0·55	0·55	2·31	Mudgere ...		
...	...	...	...	...	...	...	...	...	...	...	4·7		2·04	...	...	2·04	Yedahalli ...		
...	...	...	...	...	...	...	...	...	...	...	...	...	...	...	...	...	Sringeri ...		
											Average	**0·14**							
...	...	...	...	...	...	...	...	...	...	...	2·3	...	1·25	...	...	1·25	Chitaldrug	Chitaldrug	
...	...	...	...	...	...	...	...	...	...	...	2·0	...	0·75	...	...	0·75	Challakere ..		
...	...	-0·08	...	...	...	...	...	...	...	...	1·3	0·08	0·77	0·08	0·08	0·77	Hiriyur ...		
...	...	...	...	...	...	...	...	...	...	...	2·2	...	1·31	...	...	1·31	Holalkere ...		
...	...	...	...	...	...	...	...	...	...	...	1·5	...	0·72			0·72	Davangere ...		
...	...	0·20	...	...	...	...	...	...	...	1	0·8	0·20	0·50	0·20	0·20	0·50	Molakalmuru ...		
...	...	0·25	...	...	...	...	...	...	...	1	2·2	0·25	1·28	0·25	0·25	1·28	Jagalur ..		
...	...	0·21	...	...	...	...	...	...	...	1	2·5	0·21	1·22	0·21	0·21	1·22	Hosdurga ...		
...	...	...	...	...	...	...	...	...	...	...		...	...	...	...		Harihar ...		
											Average	**0·08**							

Average for the State, **0·19**

By Order,

B. K. VENKATA VARADA IYENGAR,
Secy. to Govt., Gen. & Rev. Dept.

711

The Mysore Gazette.

Vol. 41.] PUBLISHED BY AUTHORITY. [No. 24.

BANGALORE, THURSDAY, JUNE 14, 1906.

☞ Separate paging is given to the Parts in order that they may be filed as distinct compilations.

CONTENTS.

PART I —Notifications by the Government of His Highness the Maharaja of Mysore.

PART II —Notifications by the Government of India ; The Hon'ble the Resident in Mysore ; Chief Judge ; Survey and Inam Superintendent ; Comptroller ; Chief Engineer ; Mysore State Railway ; Amrut Mahal Department ; Inspector-General of Registration ; Senior Surgeon ; District and Sessions Judges ; Sub-Judges ; Deputy Commissioners of Districts ; Forest Officers ; Presidents, Bangalore and Mysore City Municipalities ; Season Reports ; Mortuary and Meteorological Statements ; Postal Notices ; Civil and Military Station Notifications, &c.

PART III.—Legislative Measures and Rules thereunder.

PART IV.—Official Papers.

PART I.

Notifications by the Government of His Highness the Maharaja of Mysore.

GENERAL AND REVENUE.

No. 12342—*San.* 15-05)-14, *dated* 30*th May* 1906.

It is hereby notified for general information that the place mentioned hereunder in the District of Hassan will be deemed to be an infected area for the purposes of the Regulations issued with Notifications Nos. 9383—Mis. F. 21-96 and 9384—Mis. F. 21-96, dated the 10th February 1898, under the Epidemic Diseases Regulation :—

Place.	*Taluk.*
Alur Petta	Alur Sub-Taluk.

No. 12781—*San.* (7-05)-161, *dated* 13*th June* 1906.

It is hereby notified for general information that attendance of persons from infected areas, at the fairs and festivals noted below, has been prohibited by the Madras Government :—

Name of jatra	Place	Taluk	District	Date		Authority
				From	To	
Bhuvaneswaraswami festival and cattle fair.	Muttulapuram	Sattur ...	Tinnevalli ...	25th June to 31st July 1906, inclusive.		First Assistant Resident's endorsement No. 658, dated 11th June 1906.
Sennakesavaperumal-koil festival and cattle fair.	Kanniseri ...	Do ...	Do ...	3rd to 30th June 1906, inclusive.		Do No. 656, do
*Gurunathaswami festival and the usual cattle fair.	Gettisamudram	Bhavani ...	Coimbatore ...	17th July to 19th August 1906, inclusive.		*Do No. 660, do

* The holding of the cattle fair as also the pilgrimage to the festival is prohibited.

No. 12516—*L. B.* (12-05)-13, *dated* 1*st*—5*th June* 1906.

It is hereby notified for general information that Mr. Kappanna, patel of Kommaghatta in the Bangalore Taluk, has, under clause (*f*) of para 7 of the rules framed under the Local Boards Regulation, been elected as a member of the Bangalore Taluk Board, in place of Mr. Shamanna, deceased.

No. 12540—*Ml.* (138-05)-22, *dated* 8*th June* 1906.

Under Section 6 of the Land Acquisition Regulation, VII of 1894, it is hereby declared that the undermentioned lands are required for a public purpose, *i. e.*, for laying sewage pipe in the Basavangudi Extension, Bangalore City :—

Taluk	Hobli	Village	Name of khatedar	Survey No.	Description of land	Area	Assessment	Land required	Boundaries			
									East	West	North	South
						A. g.	Rs. a. p.	A. g.				
Bangalore	Agara	Guttahalli	Chokkalinga Mudaliar	29	Dry land	10 7	13 5 0	60 1 =60 Sq. yds.	Bull temple road	Mr. A. Subbanna's land	Gavipur road	Venkataramiah's house
			Anagondnahalli Subbanna	28	Do	1 28	2 4 0	75 1 =75 Sq. yds.	Chokkalinga Mudaliar's land	Gavipur road	Do	Subbanna's cocoanut garden
			Chokkalinga Mudaliar	27	Do	14 7	16 4 6	132 1 =132 Sq. yds.	Mr. Puttanna Chetty's bungalow	Patel Muniappa's land	Chokkalinga Mudaliar's bungalow	Gavipur road

No. 12622—*Ml.* (579-05)-3, *dated* 9*th June* 1906.

Under Section 6 of the Land Acquisition Regulation, VII of 1894, it is hereby declared that the undermentioned houses are required for a public purpose, *viz.*, for opening a conservancy lane from Agrahara to Naikerhatti in the Sira Town Municipality, and under Sections 3 (c) and 7 of the said Regulation, the First General Assistant Commissioner, Tumkur District, is authorized to take order for their acquisition :—

Serial No.	Kaneshumari No.	Name of owner	Description of houses	Extent proposed to be acquired			Boundaries			
				East to west	North to south	Total sqr. feet	East	West	North	South
1	506	Mangamma ...	Mud roof ..	10	23	230	Building ..	Vacant ...	Thimmappa's vacant land	Musafirkhana road
2	507	Timmappa ...	Do	10	24	240	Remaining portion of the owner's house	Do	Marajji's vacant land	Mangamma's house
3	508	Marajji ...	Do	10	10	100	Do	Do	Lakkappa's vacant land	Thimmappa's house
4	509	Lakkappa ...	Do	10	26	260	Do	Do	Vacant land...	Marajji's house

No. 12712—*Ml.* (584-05)-3, *dated* 12*th June* 1906.

Under Section 6 of the Land Acquisition Regulation, VII of 1894, the land specified in the schedule hereunder is required for a public purpose, *viz.*, for opening a conservancy lane in the Arkalgud Municipality, Hassan District :—

District—Hassan.
Taluk—Arkalgud.
Village— Do
Name of khatedar—Sitaramaiya of Bemmati.
Description of land—Land known as old Taluk Cutcherry site.
Extent required—North : East to west 3 × north to south 6 } 18 yds.
South : East to west 2 × north to south 16 } 32 yds.

Boundaries—
East—Old Taluk Cutcherry site acquired by Ramanna in public auction.
West—Lane leading to Gajagunda road which connects the lane in front of Kanarese School and Virabhadradevara temple.
South—Street in front of Lakshminarasimhadevaru temple.
North—Lane and vacant site.

No. 12537—*Ml.* (576-05)-3, *dated 8th June* 1906.

Under the provisions of Section 6 of the Mysore Land Acquisition Regulation, VII of 1894, it is hereby declared that the undermentioned buildings and lands are required for a public purpose, *viz.*, opening out roads and lanes in the Davangere Municipality, Chitaldrug District, 1905-06.

No.	Owner's name	Description of land	Extent to be acquired in yards			Boundaries			
			Length	Breadth	Total square yards	East	West	North	South
	I Widening the lane to the west of Duggamma's temple.								
1	Kitchen of Duggamma's temple	Tiled ...	7⅓	11⅓	83	Temple ...	Lane ...	Lane ...	Road.
	II Opening a road from Halepet to Halekotwalkere.								
1	Narayana Rao	Tiled ...	4	14	56	K. Gurubasanna's house.	K. Totappa's house ...	Halepet road ..	Owner's back-yard.
2	Takkaragola Gurubasanna	Do ...	⅔	14	14	Totappa's house ..	Narayana Rao's house..	Do ...	Do
3	Tudure Totappa	Do ...	2	4	8	Narayana Rao's house..	Hanuman temple ...	Do ...	Hanuman temple.
4	Narayana Rao	Back-yard ...	4	6	24	Gurubasappa's back-yard.	Do ...	Owner's house ...	Temple well.
5	Takkaragola Gurubasanna	Do ...	2	14	28	Totappa's do ...	Narayana Rao's back-yard.	Do ..	Narayana Rao's back-yard.
6	Narayana Rao	Do ...	5	6⅔	33	Do ..	Owner's house ...	Gurubasappa's back-yard.	Bhimasena Rao's back-yard.
7	Do	Tiled ...	1	3⅓	3	Owner's yard ...	Do ...	Do ...	Do
8	Bhimasena Rao	Back-yard ...	6⅔	4	25	Totappa's back-yard ...	Do ..	Narayana Rao's back-yard.	Road.
	III Opening a road to the west of Government Branch School.								
1	Shaik Imam	Yard ...	5	10⅓	52	Government land ..	Owner's house ...	Mallappa's yard ...	Road.
2	Naraganahalli Mallarappa	Do ...	1⅔	13	22	School compound ...	Do ...	Parasappa's yard ...	Shaik Imam's land.
3	Do	Tiled ...	4⅓	4	17	Owner's house ...	Do ...	Owner's land ...	Do yard.
4	Ganagara Parasappa	Yard ...	3⅔	4⅓	16	Do ...	Do ...	Siddappa's yard ...	Mallarappa's yard.

Statement of buildings and lands required for a public purpose, etc.—*concld.*

No.	Owner's name	Description of land	Extent to be acquired in yards			Boundaries			
			Length	Breadth	Total square yards	East	West	North	South
5	Ganagara Siddappa	Yard ...	$3\frac{2}{3}$	5	18	Owner's house ...	Owner's house ...	Yellappa's yard ...	Narasappa's yard.
6	Do Yellappa	Do ...	$5\frac{2}{3}$	7	26	Do ..	Do ...	Yamanappa's yard ..	Siddappa's yard.
7	Do Yamanappa	Do ...	$3\frac{2}{3}$	$7\frac{2}{3}$	28	Do and temple..	Do ...	Mallarappa's yard ...	Yellappa's yard.
8	Naraganahalli Mallarappa	Do ...	$2\frac{2}{3}$	$15\frac{2}{3}$	42	Do ..	Do ...	Rudrappa's land ...	Do house.
9	Beeradevara temple	Tiled ...	$1\frac{1}{3}$	$9\frac{1}{3}$	12	Owner's house ...	Mallarappa's yard ..	Bheeranna's house ...	School compound.
10	Hatti Rudrappa	Do ...	$3\frac{1}{3}$	6	20	Do ...	Owner's land ...	Road ...	Owner's yard.
11	Do	Yard ...	$3\frac{1}{3}$	5	17	Do yard ...	Do ...	Owner's house ...	Mallarappa's yard.
12	Do	Vacant ...	$1\frac{2}{3}$	$13\frac{1}{3}$	22	Do house ..	Do ...	Road ...	Do house.
13	Government Branch School compound	Compound...	$1\frac{1}{3}$	15	20	School compound ...	Gangar's houses ...	Temple ...	School compound.

IV Widening the road from Gowligarapet up to Amaravati Govindappa's house.

1	Gundal Ramanna's grandson Ummanna	Back-yard ...	13	6	78	A. Sangappa's yard ...	A. Govindappa's yard...	Road ...	Owner's land.
2	Aladi Sangappa	Do ...	7	5	35	Nanjundappa's yard ...	G. Ramanna's yard ...	Do ...	Do
3	Chigateri Nanjundappa	Do ...	10	4	40	Ajjappa's yard	Sangappa's yard ..	Do ...	Do
4	Do Ajjappa	Do ...	9	$2\frac{2}{3}$	24	Gurubasayya's yard ...	Channappa's yard ...	Do ...	Do
5	Akki Gurubasaiya	Do ...	4	2	8	Sanganna's yard ...	Ajjappa's yard ...	Do ...	Do
6	Hirekerur Rudrappa	Do ..	15	$5\frac{1}{3}$	80	Owner's house ...	Nabi Saib's house ...	Do ...	Akkasale Keerathadrappa's yard.
7	Do	Tiled ...	$9\frac{1}{3}$	$5\frac{1}{3}$	50	Government land ...	Owner's yard ..	Do ...	Do house.

No. 12531—*L. B.* (448-05)-5, *dated 8th June* 1906.

Under Section 6 of the Land Acquisition Regulation, VII of 1894, it is hereby declared that the lands described hereunder are required for a public purpose, *viz.*, for diverting a road from Krishnarajpete to Melkote in the Krishnarajpete Taluk; and under Sections 7 and 3 (*c*) of the said Regulation, the Assistant Commissioner in charge of the Krishnarajpete group of taluks is authorized to take order for the acquisition of the said lands :—

District	Taluk	Hobli	Village	Name of owner	Survey No.	Dry, wet or garden	Total extent	Assessment	Extent now required	Boundaries			
										East	West	North	South
							A. g.	Rs. a. p.	A. g.				
Mysore.	Krishnarajpete.	Krishnarajpete.	Hanuvankatte ...	Devi kom Kala ...	2 4/1	Dry	2 0	2 0 0	0 2	S. No. 24 ...	Koni ...	Road ...	S. No. 25.
				Purasa ...	2 4/2	Do ...	2 1	2 0 0	0 3	Do ...	Do ...	Do ...	Do
			Guddenahalli ...	Gomal ...	47	.....	74 36	.....	3 10½	S. No. 47 ...	Boundary of Uchanahalli	S. No. 47 ...	S. No. 47.
			Kallahalli ...	Gomal ...	2	.....	209 31	.....	6 13	S. No. 2 ...	S. No. 2 ...	S. No. 2 ...	S. No 2.
			Kodihalli ..	Gomal ...	1	.....	53 32	.....	1 2	Boundary of Uyigonahalli.	Boundary of Kallahalli	S. No. 1 ...	Old road.
			Uyigonahalli ...	Gomal ...	37	Dry ...	104 9	.....	5 23	S. No. 38 Boundary of Chaknaiknahalli.	Boundary of Hattimarnahalli.	Boundary of Bommanaikanhalli.	S. No. 39.
				Beelu ...	39	Do ...	6 25	6 8 0	1 10	S. No. 38 ...	S. No. 37 ...	Boundary of Chaknaiknahalli.	S. Nos. 37 and 25.
				Chaluva Seera ...	4/2	Do ...	4 19	4 12 0	0 39	Boundary of Morasanahalli.	Halla ..	Do ...	S. No. 6.
			Haralahalli ...	Javara ...	79	Do ...	9 14	11 0 0	0 1	S. Nos. 80 and 83 ...	S. Nos. 77 and 78 ...	Torehalla ...	Road.
				Siddegowda ...	8 8/2	Do ...	2 29	2 8 0	0 4	Village site ...	S. No. 79 ...	S. Nos. 80, 82 and 84.	Do
				Thimma ...	8	Do ...	0 13	4 0 0	0 1	S. No. 123 ...	S. Nos. 4 and 2 ...	Road ...	S. No. 4.
				Do ...	123	Do ..	6 3	8 0 0	0 1	S. No. 124 ...	S. Nos. 4 and 3 ...	Do ...	S. No. 122
				Gomal ...	128	Do ...	109 33	.....	1 1	Boundary of Milnahalli.	S. Nos. 129, 127, 90, 93, 88 and 89.	Halla ...	Road.
			Melnahalli ...	Rangegowda ...	99	Do ...	6 0	5 0 0	0 10⅓	S. No. 98 ...	Boundary of Haralahalli.	S. No. 100 ...	Do
				Purasa ...	98	Do ...	8 10	7 0 0	0 2	S. No. 99 ...	S. No. 19 ...	S. No. 17 ...	Do
				Ajjegowda ...	11 6/1	Do ...	3 14	2 12 0	0 4	S. No. 97 ...	S. No. 117 ..	Road ..	S Nos. 8[illegible] and 83.

B

Statement of lands required for a public purpose, etc.—*concld.*

District	Taluk	Hobl	Village	Name of owner	Survey No.	Dry, wet or garden	Total extent	Assessment	Extent now required	Boundaries: East	West	North	South
							A. g.	Rs. a. p.	A. g.				
Mysore.	Krishnarajpete.	Krishnarajpete.	Melnahalli ...	Ranga and others ..	19	Dry ...	1 24	1 8 0	0 2	S. No. 18 ...	S. No. 98 ...	S. No. 17 ...	Road.
				Do ...	9/1	Do ..	2 30	2 12 0	0 11	Rock of stone ...	S. No. 116 ...	Road ...	S. No. 95.
				Gowda ...	18	Do ...	5 20	5 8 0	0 5	Voui ...	S. No. 19 ...	Do ...	S. No. 17.
		Santhebachahalli.	Moravanahalli ...	Sidda ...	30/1	Do ...	1 39	2 4 0	0 10	Halla ...	S. No. 1 ...	S. No. 29 ...	Road.
				Mudda and others	31	Do ...	1 18	2 8 0	0 13	Boundary of Sindaghatta.	Halla ...	Boundary of Sindaghatta.	Boundary of Sindaghatta.
				Basava ..	53/2	Do ..	1 36	2 0 0	1 10	Village site ...	Do ...	S. Nos. 61 and 62 ...	S. No 52.
				Sidda ..	54/3	Do ...	2 22	3 0 0	0 16	Halla ...	S. No. 58 ...	S. No. 59 ...	S. Nos. 55 and 56.
				Do ..	56	Do ...	2 22	2 8 0	0 27	S. No. 55 ...	Do ...	S. Nos. 54 and 58 ...	S. No 51.
				Do ...	58	Do ...	9 0	8 0 0	0 11	S. No. 56 ...	Boundary of Uyigonahalli.	Boundary of Sindaghatta.	Boundary of Uyigonahalli.
				Kunduriah ...	32/2	Do ...	1 4	1 8 0	0 8	Boundary of Sindaghatta.	Village site ...	Road ...	S. No. 33.
			Sindaghatta ..	Mollegowda ...	413	Do ...	1 21	1 4 0	0 14	Kodihalla ...	Boundary of Moravanahalli.	S. No. 413 ...	Tope.
						Garden ...	1 8	9 12 0					
			Vasantapura ...	Kallegowda ...	68	Dry ..	0 11	0 8 0	0 2	Road ...	Boundary of Milnahalli.	Road ...	S. No. 67.
				Sidda ...	59	Do ...	1 13	1 4 0	0 3	S. No. 58 ...	S. Nos. 65 and 66 ...	Village site ...	S. No. 55.
				Dyavegowda ...	69 / 1,2,3,6	Do ...	1 11	1 12 0	0 8	Road ...	S. No. 67 ...	Road ...	S. No. 63
				Sidda ...	70/1	Do ...	0 16	0 4 0	0 3	S. No. 76 ...	S. No. 71 ..	S. No. 71 ...	Road.
			Madigarhosahalli	Ramajois ...	50	Do ...	2 37	1 8 0	0 18	S. No. 52 ...	Kodihalla ...	S. No. 41 ...	S. No. 52.

916

No. R. 15556—*L. R.* 528-05-4, *dated 6th June* 1906.

Under Section 6 of the Land Acquisition Regulation, No. VII of 1894, it is hereby declared that the lands described hereunder are required for apublic purpose, *viz.*, for excavating a feeder channel to the Oomathur tank and for throwing bank to protect the Dasanur village tank, and under Sections 7 and 3 (*c*) of the said Regulation, the Assistant Commissioner in charge of the Nanjangud group of taluks is authorised to take order for the acquisition of the said lands:—

District	Taluk	Hobli	Village	Name of khatedar	Survey No.	Total extent	Kharab	Remaining extent	Assessment	Extent now required		Boundaries			
										Extent	Assessment	East	West	North	South
						A. g.	A. g.	A. g.	Rs. a. p.	A. g.	Rs. a. p				
Mysore	Nanjangud	Doddakowlande	Dasanur	Mallegowda and others ...	257	5 11	0 11	5 0	6 8 0	1 3	1 4 6	No. 251 and voni ...	No. 251 ...	No t and halla ...	Voni.
				Puttegowda and others ...	303	3 6	0 2	3 4	3 8 0	0 37	1 1 6	No. 303 ...	No. 303 .	No. 304 ..	No. 299.
				Do	304	4 6	...	4 6	5 0 0	0 31	0 14 8	No. 304 ...	No. 304 ...	No. 305 ...	No. 303.
				Chikadesaraje Urs	290	20 3	0 13	19 30	27 0 0	1 14	1 14 0	No. 290 ...	No. 29) ...	No. 297 ...	Oomathur gadi.
				Hutchasetti	297	2 27	...	2 27	2 12 0	0 19	0 8 0	No. 297 ...	No. 297 .	No. 298	No. 290
				Krishnasetti	298	2 2	...	2 2	2 4 0	0 20	0 8 6	No. 298 ...	No. 298 ...	No. 299 ..	No. 297.
				Mallegowda and others ...	299	3 24	...	3 24	4 8 0	0 19	0 9 0	No. 299 ...	No. 299 ..	No. 302 ...	No. 298.
				Subbegowda	248	1 36	...	1 36	2 12 0	0 8	0 2 11	Halla ...	No. 248 ..	Halla ..	No 249.
				Mallegowda and others ...	249	6 11	...	6 11	8 0 0	0 3	0 1 6	Do ...	No. 249 ..	Halla ...	No. 252.
				Do	252	3 30	...	3 30	4 8 0	0 4	0 1 11	No. 252 ...	No. 252 .	No. 252 and halla ...	No. 252.
				Subbegowda and others ...	256	3 0	...	3 0	4 8 0	0 13	0 7 8	No. 257 ...	No. 256 ...	Nos. 312 and 313 and halla	No. 256.
				Do	311	5 15	0 2	5 13	7 8 0	0 3	0 1 7	No. 311 ..	No. 311 ...	No. 311 ..	Halla.
				Mallegowda and others ...	313	11	0 11	4 0	4 8 0	0 17	0 8 0	No. 256 ...	No. 313 ...	No. 313 ...	No. 313.
				Total ...		65 22	0 39	64 23	83 4 0	6 31	8 3 9				

No. G. 6069, *dated* 11*th June* 1906.

The following List of Papers placed at the disposal of the Press is published for general information :—

Serial No.	No. and date of Proceedings	Subject
1	R. 12931-70—Ft., 108-05-3, dated 6th April 1906.	Reviewing the Forest Administration of the State for 1904-05
2	R. 14246-54—L. R. 574-05-2, dated 8th May 1906.	Laying down the procedure to be adopted for recovering the arrears due on vacant building sites.
3	R. 14313-21—L. R. 639-05-2, dated 9th May 1906.	States that joint pattas are not allowed by the Land Revenue Code and the Rules thereunder.
4	R. 14339—R. M. 9-05-36, dated 9th May 1906.	Lays down that cotton goods exported to foreign ports are not exempted from Excise duty under the Mysore Cotton Duties Regulation.
5	R. 14737-76—L. R. 675-05-1, dated 14—15th May 1906.	Directs that the Revenue Commissioner in Mysore shall be Ex-Officio Director of Agricultural and other Statistics and transfers three clerks of the General and Revenue Secretariat to the Revenue Commissioner's office.
6	8034-44—Ed. (102-05)-15, dated 1st February 1906.	Reviews the Report on Public Instruction in Mysore for the year 1904-05, and that the working of the Central College for the same year.
7	9437-49—L. B. (332-05)-2, dated 14th March 1906.	Sanctions the budget estimates of the Kolar Gold Fields Sanitary Board for the year 1906-07.
8	9729-39—Ml. 343-05-4, dated 21st March 1906.	Sanctions the excess expenditure of Rs. 5,267-9-10 incurred in the budget grant of the Mysore City Municipality during the year 1904-05.

No. R. 15553—*R. M.* 611-05-2,*dated* 6*th June* 1906.

Under Section 6 of the Land Acquisition Regulation, No. VII of 1894, it is hereby declared that the land described hereunder is required for a public purpose, *viz.*, for extending the village site; and under Sections 7 and 3 (*c*) of the said Regulation, the Assistant Commissioner in charge of the Tarikere group of taluks is authorized to take order for the acquisition of the saaid land :—

District—Kadur.
Taluk—Tarikere.
Hobli —Amrutapura.
Village—Lakshmisagara.
Name of khatedar—Marulaiya *bin* Rudraiya.
Survey No.—4.
Dry, wet or garden—Dry.
Total extent—13 acres and 19 guntas.
Assessment—Rs. 18.
Extent now required—39 guntas.
Boundaries—
East—Cattle track in Survey No.
West—Survey No. 23.
North—Village site already acquired out of Survey No. 4.
South— Do No. 5.

No. R. 15658—*L. R.* 703-05-3, *dated* 9*th June* 1906.

Under Section 6 of the Land Acquisition Regulation, No. VII of 1894, it is hereby declared that the land described hereunder is required for a public purpose, *viz.*, for the extension of the village site of Ganiga village, Mandya Taluk; and under Sections 7 and 3 (*c*) of the said Regulation, the Assistant Commissioner in charge of the French Rocks group of taluks is authorized to take order for the acquisition of the said land :—

District—Mysore.
Taluk—Mandya.
Hobli—Basaralu.
Village—Ganiga.
Name of khatedar—Kempa, Kada—Joint khatedars.
Survey No.—$\frac{1}{1}$.
Dry, wet or garden—Dry.
Total extent—6 acres and 17 guntas.
Assessment—Rs. 4-0-0.
Extent now required—2 acres.
Boundaries—
East—Part of Survey No. 1 and Survey No. 49.
West—Part of Survey No. 1.
North—Portion of Survey No. 1.
South—Lane and Gramathana.

No. 12534—*L. B.* (346-05)-5, *dated 8th June* 1906.

Under Section 6 of the Land Acquisition Regulation, No. VII of 1894, it is hereby declared that the houses described hereunder are required for a public purpose, *viz.*, for widening the Doddatorageri road in Kalaley, Nanjangud Taluk; and under Sections 7 and 3 (*c*) of the said Regulation, the Assistant Commissioner in charge of the Nanjangud group of taluks is authorized to take order for the acquisition of the said houses:—

Serial No.	Taluk	Hobli	Village	Name of house owner	Dimensions		Area in square yards	Tiled, thatched or open land	Boundaries			
									East	West	North	South
1	Nanjangud	Kasaba	Kalaley	Manchachari, brother of Virachari ...	7	1	7	Tiled ...	Road ...	Road ...	Road ...	Manchachari's house
2				Rangi	1	6	6	Do ...	Do ...	Rangi's house ...	Vengatarama's house	Kencha's house
3				Kencha	1	8	8	Do ...	Do ..	Kencha's house ...	Rangi's house ...	Budi Basava's house
4				Budi Basava	1	7	7	Do ...	Do ...	Basava's house ...	Kencha's house ...	Road
5				Devanayaka	5	5½	27½	Do ...	Devanayaka's house ...	Budi Basava's open land	Road ...	Gunja Narasimha's open land
6				Gunja Narasimha Iyengar	5	24	120	Opened land ...	Owner's house ...	Surahalli Ramanna's house	Devanayaka's house ...	Road
7				Kurahatti Javara	11	1	11	Thatched ...	Budi Basava's open land	Sidda's house ...	Road ...	Javara's house
8				Malayana Sidda	4	⅔	2⅔	Do ...	Javara's house ...	Do ...	Do ...	Sidda's house
9				Do	3⅓	⅔	2¼	Tiled ...	Sidda's house ...	Deva's house ...	Do ...	Do
10				Malaya's cousin Deva...	3⅓	⅔	2¼	Thatched ...	Do ...	Ranga's house ...	Do ...	Deva's house
11				Sanjivana Ranga	5	⅔	3⅓	Opened ...	Deva's house ...	Kiraganiga Setti's open land	Do ...	Ranga's house
12				Kiraganigara Setti	4	1	4	Do ...	Sanjivaranga's house ..	Kiraganiga Setti's house	Do ...	Kiraganiga Setti's open land

C

No. R. 15555—*R. M.* 534-05-5, *dated 6th June* 1906.

Under Section 6 of the Land Acquisition Regulation, No. VII of 1894, it is hereby declared that the lands described hereunder are required for a public purpose, *viz.*, for inclusion in the bed of the Mavathur tank; and under Sections 7 and 3 (*c*) of the said Regulation, the Assistant Commissioner in charge of Mudgere group of taluks is authorized to take order for the acquisition of the said lands:—

District / Taluk / Hobli	Name of khatedar	Survey No.	Dry, wet or garden	Extent now required		Boundaries		
				Extent	East	West	North	South
Tumkur / Kolala / Sirganahalli	1 Srikantiah, son of Subba Sastri ½. 2. Subbarayappa, son of Krishna Sastri ¼. 3. Venkatnaranappa, brother of Nanjunda Sastri ⅛. 4. Nanjunda Sastri ⅛ ...		Dry	A. g. 105 23	Bevinhalli and Golhalli village boundary, Doddballapur Taluk	Remaining portion of Sirganahalli village.	Mavathur.	Huraligere.

No. Fl. 8238—*G. M.* 227-05-9, *dated 7th June 1906.*

His Highness the Maharaja has been pleased to mark, in the manner shown below, his appreciation of the services rendered by officers of Government, non-official gentlemen and committees, in connection with the reception of Their Royal Highnesses the Prince and Princess of Wales at Mysore and Bangalore.

1. The thanks of His Highness will be conveyed to the following officers, for the care and forethought brought to bear by them on the supervision of the various arrangements connected with the Royal visit, which have contributed to make it a success:—

1. Mr. E. Maconochie, I.C.S., Private Secretary to His Highness the Maharaja.
2. Rao Bahadur Mr. C. Madiah, late Member of Council.
3. Lt.-Col. J. Desaraj Urs, Chief Commandant.
4. Mr. W. McHutchin, Chief Engineer.
5. Lt.-Col. J. Smyth, I.M.S., Senior Surgeon.
6. Lt.-Col. R. G. Jones, Military Assistant.
7. Mr F. E. C. Carr, Inspector-General of Police.
8. Rai Bahadur Mr. M. Muthanna, Conservator of Forests.
9. Mr. H. H. Sparkes, Deputy Commissioner, Mysore.
10. Mr. D. Devaraj Urs, Deputy Commissioner, Bangalore.
11. Capt. Traill, Superintending Engineer.
12. Mr. H. P. Gibbs, Chief Electrical Engineer.

2. His Highness' thanks will also be communicated to Mr. Larmour of Messrs. Lazarus & Co., and to the four committees mentioned below, for their commendable exertions in connection with the reception of Their Royal Highnesses:—

1. Bangalore Reception Committee.
2. Mysore Reception Committee.
3. Mysore Exhibition Committee.
4. Chamarajendra Technical Institute Foundation Stone Committee.

3. (*a*) Khillats have been presented by His Highness the Maharaja in open Durbar to the following officers in recognition of their services:—

	Name.		Designation.
1.	Mr. D. Sitarama Rao	..	Secretary, Reception Committee Mysore,
2.	,, B. S. Venkatachar	...	Executive Engineer.
3.	,, P. S. Achyuta Rao	...	Civil Surgeon.
4.	,, B. P. Raghavalu Naidu	...	Executive Engineer.
5.	,, B. Subba Rao	...	Executive Engineer.
6.	,, D. M. Narasinga Rao	...	Registrar of the Secretariat, late Under-Secretary.
7.	,, R. Puttanna	..	Personal Assistant to the Chief Commandant.
8.	,, C. Venkata Rao	...	Vice-President, Mysore.
9.	,, L. Krishna Rao	...	Superintendent of Police.

Name.		Designation.
10. Mr. N. Subba Rao	...	Head-Quarter Superintendent of Police.
11. „ K. Sreenivasa Rao	...	Assistant Commissioner.
12. „ C. S. Balasundram Iyer	...	Secretary, Bangalore Reception Committee.
13. „ A. Ananda Rao	...	Secretary, Exhibition Committee.
14. „ Mahomed Jáffer	...	Superintendent of Police.
15. „ Zahiruddin Meccai	..	Do
16. „ Y. V. Krishna Murti	...	Do
17. „ Chamaraj Urs	...	Regimentdar, Imperial Service Regiment.
18. „ M. G. Rama Rao	...	Assistant Conservator of Forests.
19. „ Mahomed Usman	...	Assistant Surgeon.
20. „ T. G. Lakshman Rao	...	Head Master, Engineering School.
21. „ C. Krishna Rao	..	Amildar, Chamrajnagar.
22. „ H. Sreenivasa Rao	...	Assistant Conservator of Forests.
23. „ M. Ranga Rao	...	Assistant Commissioner on special duty.
24. „ G. Subbusami Iyer	...	Superintendent, Industrial School.
25. „ B. C. Sreenivasiengar	..	Assistant Engineer.
26. „ K. Muthaiya	...	Temporary Assistant Conservator of Forests and Officer in charge of Game Preserves.
27. „ M. G. Krishnasami Rao	...	Amildar, Bangalore Taluk.
28. „ C. Venkata Rao	...	Superintendent, Special Reception Office.
29. „ R. S. Nagavkar	...	Police Inspector.
30. „ Gopalkrishniengar	...	Amildar, Seringapatam.
31. „ T. Venkatramiah	...	Do. Mysore.
32. „ S. Narayana Rao	...	Do Bowringpet on Exhibition duty.
33. „ T. Venkatramiah	...	Do Heggaddevankote.
34. „ Jagannatham Pillay	...	Health Officer, Mysore.
35. „ G. Krishnamurti Naidu	...	Sub-Assistant Conservator of Forests.
36. „ Basavaraj Urs	...	Probationary Assistant Superintendent of Police.
37. „ Mahomed Moosa	..	Commandant, Palace Barr.
38. „ Syed Abdul Rahman	...	Commandant, 1st Regiment.
39. „ Krishnasami Iyer	...	Sub-Division Officer, Trust Board, Mysore.
40. „ Nanjaraj Urs	...	Rissaldar.
41. „ Sreenivas Rao Salikay	...	Do.
42. „ H. F. Marker	...	Sub-Division Officer, Trust Board Mysore.
43. „ Ramachendra Rao	...	Assistant Superintendent, Industrial School.
44. „ Gulam Mahomed Mecca	..	Deputy Amildar.
45. „ Tippu Sultan Alli Khan	...	Probationary Asst. Supt. of Police.
46. „ Mirza Mahomed Ismail	...	Do.
47. „ V. S. Rajagopalacharry	...	Head-Quarter Inspector of Police.
48. „ Mahomed Nijamudin	...	Railway Inspector
49. „ R. Shama Rao	...	Police Inspector.
50. „ Mahomed Jaffer Mecri	...	Do
51. „ Syed Ahmed	...	Jamadar.
52. „ Hari Rao	...	Subedar Major.
53. „ Varadarajalu Naidu	...	Subedar.
54. „ Sha Abdul Hassan	...	Do
55. „ Peer Khan	...	Subedar.

(*b*) Souvenirs in the shape of watches bearing the inscription "Presented by His Highness the Maharaja for services during Royal Visit, 1906" will be forwarded to the following officers with letters expressing appreciation of their services :—

Name.		Designation.
Mr. J. Cameron ...	...	Superintendent, Government Gardens.
„ C. H. Yates ...	...	Superintendent, Government Press.
„ H. Donne ...	...	Assistant Secretary, Military Department.
„ J. E. A. D'Cruz ...	...	Executive Engineer, Trust Board, Mysore.

Name.	Designation.
Miss Ayachammal	Civil Surgeon.
Mr. R. W. Simpson	Superintendent, Government Stables.
„ F. A. Steel	Assistant Engineer.
„ Hardaker	Palace Department.
T. F. Wilkinson	Assistant Superintendent of Police.
Miss Rajagopal	Superintendent, Girls' Schools, Bangalore.
Mr. Frank Joseph	Electric Operator.
„ O'Doherty	Police Inspector.
Miss Holman	Apothecary.
Mr. Norris	Police Inspector.
„ Edwards	Do
„ Searle	Do

4. His Highness has been pleased to sanction an increase of the pension of Field Inspector Oosu Meah from Rs. 35 to Rs. 100 per mensem and the grant to him of a bonus of Rs. 1,000 in consideration of his exceptional services in connection with the Khedda operations.

5. The payment of a bonus to the following officers and officials is also sanctioned :—

(*a*) *A bonus of two months' pay to*—

Mr. H. Srinivasa Rao, Assistant Conservator of Forests.
„ K. Muthaiya, do
B. Chendrasekharaiya, Ranger.
C. Appiah, Forester.
K. Venkatanaranappa, Forester.

(*b*) *A bonus of one month's pay to*—

Mr. G. Krishnamurti Naidu, Sub-Assistant Conservator.
V. Govindarajalu Naidu, Clerk, Conservator's Office.
V. Kesava Rao, Clerk, Forest Office, Mysore.
L. Krishnasami Rao, Clerk, State Shikari Office.
Krishnamurti Rao, Hospital Assistant, on special duty.
L. R. Mascarenhas, Ranger.
V. Krishnamurti Rao, Forester.
K. Srikantaiya, Forester.
K. Iyappa, do

(*c*) *A bonus of half a month's pay to*—

1. Krishnaswami Mudaliar, Sub-Overseer, Mysore City Improvement Trust Board.
2. Parthasarathi Mudaliar, Draftsman, do
3. Nizam Ali Khan, Surveyor, do
4. Venkataramana Chetty, Clerk, do
5. Govindaraja Mudaliar, Clerk, do
6. Kuppusami Mudaliar, Sub-Overseer, do
7. Edwards, Surveyor, do
8. Raghupati Naidu, Sub-Overseer, do
9. Punyakoti Mudaliar, Taluk Mestri, do
10. Rajacharry, Palace Mestri.
11. Y. Lakshminaranappa, Sale Room Clerk, Industrial School.
12. N. Subba Rao, 3rd Assistant, Educational Branch, Industrial School.
13. A. V. Sundara Sastri, 1st Assistant, do
14. T. K. Ramaswamiah, Head Master, do
15. J. Rozario, Carpentry Mestri.
16. Giddanna Mestri, Pottery Instructor.
17. G. K. Sitarama Iyengar, Store-keeper.
18. Reuben, Overseer, Mysore Division, P. W. D.
19. J. W. H. Ellis, Mandya, do
20. Armugam Mudaliar, Sub-Overseer, Marikanave Division, P. W. D.

21. T. Subba Rao, Sub-Overseer, Yedatore, P. W. D.
22. Damodara Mudaliar, Taluk Mestri, Mysore, P. W. D.
23. Iyacannu Pillay, Sub-Overseer.
24. Raghavendra Rao, Overseer, P. W. D., Heggaddevankote.
25. C. Krishnaiya, Chief Constable, Mysore City.
26. Anantaramiengar, do do
27. Devaraja Urs, do do
28. Mellor, do
29. Howell, do
30. Anderson, do
31. Dunning, do
32. Walton, do
33. Siddaramappa, do
34. Subbanna, Head Constable.
35. Ekambaram Mudaliar, Jamadar.
36. Srinivasiengar, do
37. Ghouse Sheriff, do
38. Appanna, do
39. Annaiya, do
40. Eswara Rao, do
41. Venkata Rao, Recruit.
42. V. Lakshmana Rao, Municipal Engineer, Mysore.
43. Kesaviengar, Surveyor, Mysore City Municipality.
44. K. V. Puttanna, Manager do
45. M. A. Appalachar, Municipal Overseer do
46. Annadore Iyer, Water Inspector do
47. Gulam Raja Beig, Assistant Sanitary Inspector do
48. Venkata Rao, Store-keeper do
49. Venkatakrishnaiya, Accountant, D. P. W. do
50. N. Srikantiah, Head Munshi do
51. G. Krishna Rao, Clerk do
52. Puttu Rao *alias* Subba Rao, Accountant do
53. Ramachandra Rao, Deputy Munshi do
54. G. Subba Rao, Town Hall Mutsaddi do
55. Ramachandra Chetty, Octroi Daroga do
56. Nanjappa, Conservancy Overseer do
57. Ramaswamy, Bharamarga Manegar do
58. M. Krishnasami Rao, Head Clerk, Trust Board, Mysore.
59. E. S. Sundara Iyer, 3rd Clerk, do
60. Charles Rozario, Sub-Overseer do
61. Mahomed Tayer, do do
62. C. Venkataratnam, Taluk Mestri do
63. Narayanasami Mudaliar, Head Draftsman do
64. Bindu Rao, Clerk, Forest Settlement Office.
65. Venkatramiah, Clerk, District Forest Office, Mysore.
66. Srinivasa Rao, Clerk, Exhibition Office.
67. Basappa, do
68. Devaraja Urs, do
69. Ramachandra Rao, do
70. C. Ananda Rao, do now in the District Treasury.
71. A. Setu Rao, do Compositor, G. T. A. Press, Mysore.
72. Lakshman Rao, Overseer of the Curzon Park.
73. Syed Abdul Gaffer, Division Commander, E. Division.
74. Mir Abbas Ali do C. do
75. Mahomed Fazel do D. do
76. Furzalla Khan, Jamadar, D. Division.
77. Narayanasami, do B. do
78. Tyagaraj, Jamadar Quarter Master.

79. Arokiam, Jamadar, E. Division.
80. Azeem Khan do A. do
81. P. R. Narasinga Rao, Clerk, Carriage Department.
82. Mahomed Oosman, Pensioned Subedar.
83. S. Vishakantaiya, Clerk in charge of Government House.
84. T. S. Ramachandra Rao, Clerk, Military Assistant's Office.
85. Sivarama Iyer, Municipal Overseer.
86. Nagaratna Mudaliar, Sub-Overseer.
87. Venkatachar, Tank Inspector.
88. Abdul Rahiman, do
89. Mahomed Khan Shirani, Lance Naik.
90. P. A. Krishnasami Iyer, Clerk, Special Office.
91. V. K. Srinivasa Rao, do
92. B. Seshagiri Rao, Clerk, General and Revenue Secretariat.
93. T. V. Krishniengar, do do
94. Mr. Everard, Police Inspector.
95. R. Narain Iyer, do
96. M. Rama Rao, do
97. Sirajuddin Mahomed, Police Inspector, Mysore Taluk.
98. S. Rangasamiengar, Police Inspector, Mysore Head-Quarter Office.
99. Krishnappa, Police Inspector.
100. Rangaraj Urs, Police Inspector, Gundlupet.
101. Fazalulla Khan, Police Inspector.
102. Bhimasena Rao, do
103. Latiff Ali, do
104. H. Subba Rao, do
105. Venkatavaradachar, do
106. Nanjappa, do
107. Devasikamaniengar, Police Inspector, Nanjangud.
108. Nagesa Rao, Police Inspector.
109. Vasudeva Rao, do
110. Krishna Rao, do
111. Govinda Naidu, do
112. Rudrappa, do
113. Nataraja Iyer, do
114. Ghulam Ali Sheriff, do
115. S. Narasimiengar, Clerk, Military Assistant's Office.
116. B. Narayaniengar, do do
117. Abdul Khalik Amin, Nazim, Ganjam Gumbaz.

(*d*) *A money present of Rs 20 to*—

1. Srikantaiya ... } Forest Guards.
2. Bomma ... }
3. Billekencha ... }
4. Hulimara ... }

6. His Highness has noted with approval the services rendered, in connection with the Royal reception, by the following non-official gentlemen :—

1. Mr. A. H. Jackman, Contractor, Mysore.
2. „ Sundram Pillay, do
3. „ Mahomed Sillar, do
4. „ Siddappa, Contractor, Trust Board, Mysore.
5. „ Yagappa, Taskworker under the Trust Board, Mysore.
6. „ Krishnasami Mudaliar, Contractor, Bangalore.
7. „ Chinnasami Pillay do
8. „ Thathappa do
9. „ Sahukar Mohadin Sab, Contractor, Mysore.

CIVIL APPOINTMENTS.

Heads of Departments and all other officers concerned are informed that Notifications in the Gazette are in future to be accepted as disposing of all references regarding leave, transfers, appointments, powers and other personal questions affecting Gazetted officers, as to which orders are gazetted by the Government in this Part of the Gazette, and that any subsidiary orders as to relief of their subordinates and the like, which such notifications necessitate, must be issued by them on receipt of the Gazette, as no other orders will be issued by Government.

No. J. 3454—*Cts.* 25-05-6, *dated Mysore, 8—9th June* 1906.

The three months' privilege leave of absence combined with nine months' furlough granted to Mr. P. F. Bowring, Assistant Commissioner and 1st Class Magistrate, in Government Notification No. J. 349—Cts. 25-2, dated the 1st August 1905, is hereby extended by four days.

No. G. 6138—*G. M.* 272-05-3, *dated* 13*th June* 1906.

Mr. R. Nanasami Rao, Private Secretary to the Dewan, having availed himself, with effect from the 8th May 1906, of the fifteen days' privilege leave granted to him in Notification No. 5647—G. M. 272-05-2, dated the 15th idem, and returned to duty in the afternoon of the 22nd May 1906, the unexpired portion of his leave, *viz.*, a day, is hereby cancelled.

No. 12788—*Med.* (55-05)-15, *dated* 13*th June* 1906.

Mr. P. S. Achyuta Rao, Civil Surgeon and District Medical and Sanitary Officer, Mysore District, having returned to duty on the forenoon of the 21st May 1906, after availing himself from the afternoon of the 30th April 1906, of the twenty-five days' privilege leave granted to him in Notification No. 11140 of the 27th April 1906, the unexpired portion of the leave is hereby cancelled.

No. R. 15622—*Agri.* 113-05-6, *dated 8th June* 1906.

Under Article 188 of the Mysore Service Regulations, Mr. B. Venkata Rao, Assistant Chemist, is granted privilege leave of absence for fourteen days with effect from the 5th June 1906.

No. R. 15720—*L. R.* 660-05-2, *dated* 11*th June* 1906.

Mr. K. Krishna Iyer, Assistant Commissioner, is permitted to return to duty from the leave granted to him in Notification No. R. 11708—L. R. 224-04-6, dated the 23rd May 1905, and will be placed in charge of the State Huzur Treasury at Bangalore.

No. Fl. 8558—*G. M.* 43-05-15, *dated* 12*th June* 1906.

During the absence of Mr. C. H. Yates, Superintendent of the Government Press, Stationery, etc., on deputation to England for a period not exceeding three months, sanctioned in Government Order No. G. 5364-5—G. M. 43-05-13, dated the 1st May 1906, Mr. H. Ramaiya, Assistant Secretary to Government, will be in charge of the Government Press, Stationery, etc., in addition to his own duties.

No. 12736—*Ed.* (350-05)-3, *dated* 12*th June* 1906.

Under Article 165A (1) of the Mysore Service Regulations, Mr. H. J. Bhabha, M.A., Inspector-General of Education in Mysore, is granted privilege leave of absence for three months combined with four months' furlough, with effect from the 11th June or the other date from which he may avail himself of the same.

2. Mr. J. Weir, M.A., Principal, Maharaja's College, Mysore, is appointed to act as Inspector-General of Education in Mysore, during the absence of Mr. Bhabha on the above leave or until further orders.

3. Mr. T. Denham, M.A., Professor, Maharaja's College, Mysore, is appointed to act as Principal of the same College during the employment of Mr. Weir as above, or until further orders.

No. R. 15824—*L. R.* 277-05-8, *dated* 13—14*th June* 1906.

Under Article 219 of the Mysore Service Regulations, Mr. V. Kantiravachar, Amildar of the Tumkur Taluk, is granted leave of absence on private affairs for three months, with effect from the date on which he may avail himself of the same.

2. Mr. J. Ball, Amildar, is transferred from Gubbi to the Tumkur Taluk.

3. Mr. C. Narayana Rao, B.A., B.L., Head-Quarter Inspector of Police, and lately Acting Amildar of the T.-Narsipur Taluk, is appointed to act as Amildar *sub pro tem* of the Gubbi Taluk, during the absence of Mr. Kantiravachar, or until further orders, and is invested with the powers of a Magistrate of the 3rd Class.

No. R. 15755—*L. R.* 542-05-4, *dated* 13*th June* 1906.

The fifteen days' privilege leave granted to Mr. K. Mathan, Assistant Commissioner, in Notification No. R. 12102—L. R. 542-05-2, dated the 21st March 1906, is hereby cancelled, as the same was not availed of by him.

No. 12601—*Med.* (148-05)-7, *dated Camp Mysore,* 7—8*th June* 1906.

The following transfers of Medical Officers are ordered —

No.	Name and designation	From	To
1	Mr. K. M. Appaiya, District Medical and Sanitary Officer.	Bangalore District	Kadur District.
2	,, Kuppuswamy Mudaliar do	Kadur do ...	Kolar Gold Fields.
3	,, Krishnaswamy Iyer do	Kolar Gold Fields	Bangalore District, with the additional charge of the male division in the Victoria Hospital.

No. R. 15647—*L. R.* 604-05-12, *dated* 9*th June* 1906.

In modification of the arrangement sanctioned in Notification No. R. 13367—L. R. 604-05-2, dated the 16th April 1906, the following arrangements are ordered :—

1. Mr. Gulam Mahomed Meccai, Deputy Amildar of Closepet, will act as Amildar and 3rd Class Magistrate of the Dodballapur Taluk.

2. S. Ranganna, Taluk Sheristadar of the Heggaddevankote Taluk, will act as Deputy Amildar and 3rd Class Magistrate of the Closepet Sub-Taluk.

No. J. 3452—*Cts.* 307-05-2, *dated* 9*th June* 1906.

Under Section 12 of the Code of Criminal Procedure, Mr. Dharmaraj Chetty, Acting Extra Assistant Commissioner, Hassan District, is appointed a Magistrate of the Second Class ; and e invested with the power to commit for trial under Section 206 of that Code.

No. J. 3453—*Police* 176-05-10, *dated* 9*th June* 1906.

Mr. R. T. M. Mayne is appointed to act as Superintendent of Police of the Kolar Gold Fields during the absence of Mr. P. B. Thomas on leave.

The Petition Box kept at the Office of the General and Revenue Secretariat, Bangalore, will be cleared at 12 noon every day by the Secretary to Government, General and Revenue Department, and in his absence from Bangalore, by the Deputy Secretary.

By Order,

K. S. CHANDRASEKHARA AIYAR,

for *Secy. to Govt., Gen. & Rev. Dept.*

PUBLIC WORKS.

No. 551—3888, *dated* 9*th June* 1906.

The following Extract from the *Gazette of India,* dated 2nd June 1906, is republished for information :—

Railway Board Notifications, Simla, the 31*st May* 1906.

No. 113.—The following temporary promotions in the classes of Chief and Superintending Engineers attached to State Railways, are ordered, with effect from the dates specified :—

Name	From	To	Date
*	*	*	*
McHutchin, W. ...	Superintending Engineer, 1st Class, supernumerary.	Chief Engineer, 2nd Class, temporary, supernumerary.	3rd April 1906.
*	*	*	*

(Signed) C. A. R. BROWNE, LIEUT.-COL., R.E.,

Secretary, Railway Board.

By Order,

BERNARD DAWES, LIEUT., R.E.,

Under-Secretary to the Govt. of Mysore, P. W. D.

GEOLOGICAL.

No. 2490, *dated* 1*st June* 1906.

The Government of His Highness the Maharaja of Mysore are pleased to make the following addition to the rules for the grant of prospecting licenses and mining leases issued with Notification (Geological) No. 555—S., dated 2nd March 1904 :—

Rule 8, *line* 1.—After " block of land, " add " not exceeding 12 square miles."

No. 2521, *dated* 4*th June* 1906.

The Government of His Highness the Maharaja of Mysore are pleased to direct that the following additions be made to the rules for the grant of prospecting licenses and mining leases in Mysore, published under Government Notification (Geological) No. 555—S., dated 2nd March 1904 :—

(1) *Rule* 10.—After the words " will be valid for one year " add the words " or such shorter period within which a mining lease is granted thereunder to the licensee."

(2) *Form of License, Clause* 1.—After the words " one calendar year from the date hereof " add " or such shorter period within which a mining lease is granted hereunder to the licensee."

(3) *Form of License, Clause* 15.—Add a fresh sentence at the end :—" When such mining lease has been granted to the licensee, this license shall immediately cease and determine."

No. 2668, *dated* 8*th June* 1906.

Mr. L. H. Beckwith is appointed Deputy Inspector of Mines in Mysore, *vice* Mr. George Lavelle, deceased.

By Order,

Offg. Secy. to Govt., Geol. Dept.

729

The Mysore Gazette.

Vol. 41.] PUBLISHED BY AUTHORITY. [No. 24.

BANGALORE, THURSDAY, JUNE 14, 1906.

PART II.

Notifications by Govt. of India, Resident, Chief Court, &c.

FOREST DEPARTMENT.

IMPERIAL FOREST SCHOOL, DEHRA DUN.

Notification dated 1st June 1906.

Applications are invited before 15th July 1906, from natives of Mysore being *full graduates* in Arts for training in the Imperial Forest School at Dehra Dun, with a view to their subsequent employment as Forest Rangers in the State on salaries rising from Rs. 50 to Rs. 100 per mensem, provided their conduct and training continue to be satisfactory.

Candidates should submit certificates of physical fitness for out-door life, age and of respectability and moral character from heads of Colleges or individuals of position.

2. Selected candidates must appear in October next for the Entrance Examination of the Dehra Dun School, which will be held in the office of the Conservator of Forests at Bangalore, on passing which they will be called upon to undergo a probationary practical forest training of three and a half months under the orders of the Conservator, before joining the Forest School in April 1907.

3. While under this practical training, they will receive travelling allowance of Rs. 20 per mensem, and should they give satisfaction during this period, will be deputed to Dehra Dun and given—

(i) A monthly stipend which will not be more than Rs. 40 per mensem during the course of 23½ months which they have to undergo at the school ;

(ii) their actual travelling allowance to and from Dehra Dun.

4. The grant of this stipend will be held to constitute a lien on the candidate's services for a period of five years after leaving the school, and removal for misconduct within that time will be grounds for refund of the total stipend awarded, and for this, proper security will be demanded. On the other hand, Government will be under no obligation to employ the candidate after returning from the school, while it may discontinue the grant of stipend at any time during the school course *without assigning any reason for so doing.*

For further information regarding the rules, etc., of the school, applicants should address this office.

M. MUTHANNAH,
Consvr. of Forests in Mysore.

Notice dated 29th May 1906.

Attention of the firewood dealers is invited to this office Notification published in the *Mysore Gazette*, dated 7th June 1906, advertising the sale of firewood in the marked coupes of the Kamasandra State Forest, which will be held on Monday the 25th June 1906 at the Bowringpet travellers' bungalow.

S. A. BAPU RAO,
Dist. Forest Officer, Kolar.

Notification dated 6th June 1906.

It is hereby notified for general information that the exclusive privilege of collecting Tangadi *(cassia auriculata)* and Kakke *(cassia fistula)* barks on all Government unoccupied lands of Shimoga, Honnali and Shikarpur Taluks of the Shimoga District, excluding State Forests and Plantations (which will be separately dealt with), from 1st August 1906 to 30th June 1907, will be offered for sale talukwar, by public auction by the District Forest Officer or other officer deputed by the Deputy Commissioner and District Forest Officer, at Shimoga on the 16th July 1906.

2. The auction will commence at 2 P.M. on the date of sale, and, if necessary, it will be continued on the next following day at the same hour.

3. The Deputy Commissioner reserves to himself the right to accept or reject any bid without assigning any reason therefor.

4. Parties intending to bid must attend either in person or by duly accredited agents, and no person will be permitted to bid either in his own behalf or on account of any one else unless he deposits a sum of Rs. 100. The deposit made by the unsuccessful bidder will be returned at the close of the sale. The successful bidder shall, within three days after the confirmation of the sale is intimated to him or to his agent, pay into the Shimoga District Treasury one-eighth of the total rental including the deposit already made. Should he fail to do so, the deposit of Rs. 100 already made shall be forfeited, and the exclusive privilege will be re-sold at the risk of the defaulter, who shall make good all loss thereby incurred but shall not participate in any gain by such re-sale.

5. The lessee shall deposit a money security of Rs. 200 in favor of the District Forest Officer and sign an agreement binding himself to observe the conditions below, and the security amount should be paid and an agreement executed within five days after the confirmation of the sale is intimated to him or his agent, and in default the deposit of Rs. 100 will be forfeited and the right re-sold.

6. The balance of the lease amount and local cess at one anna in the rupee on the whole sum shall be paid in three equal quarterly instalments as noted below, commencing from 1st October 1906 :—

1st October 1906.
1st January 1907.
1st April 1907.

7. In the event of any khist not being so paid, the lease will be cancelled, all bark remaining unremoved will be confiscated, and the whole of the balance of the lease amount will be recovered at once as a revenue demand.

Conditions.

(1) To prevent the cutting or barking of stems less than one year old. The barked wood to be the property of the lessee.

(2) To furnish a list of sub-contractors and mestris who may be appointed for the collection of barks in the different working circles.

(3) To keep accounts of all bark removed in the form prescribed by the District Forest Officer and submit, when required, the accounts so kept to the inspection of officers of and above the grade of a Forest Ranger, and of and above the rank of the Amildar or the Police Inspector.

(4) To provide passes for each cart-load of bark in such manner as may be laid down by the District Forest Officer.

(5) To forfeit at the expiry of the lease all bark remaining within the limits of the Shimoga District or any Railway permises within the said district.

(6) In the event of breach of any of the above conditions, the lease is liable to be cancelled, all the bark collected and stored up to the date of default or delinquency to be confiscated, and the whole of the lease amount paid up by the contractor or such portion thereof as may be decided by the Deputy Commissioner, be forfeited to Government.

Notification dated 7th June 1906.

It is hereby notified for information that the following quantities of timber will be sold by public auction in the Shimoga depôt on the 25th instant by the District Forest Officer or other officer deputed by him.

No.	Name of depot	Date of sale	Teak logs	Nandi logs	Other reserved logs	Matti logs	Other unreserved logs	Teak poles	Jambe poles	Dindiga poles	Teak rafters	Teak reepers	Kiribidrus	Hebidrus	Remarks
											C. ft.	R. ft.			
1	Shimoga	25th June 1906.	10	75	75	100	75	50	100	100	576	7,000	250	100	More or less.

Terms of sale.—Cash payment immediately after sale. The materials should be removed within one month from date of sale.

J. J. MONTEIRO,
Dt. Forest Officer, Shimoga.

Notification dated 5th June 1906.

It is hereby notified for general information that the following quantities of timber will be sold by public auction in the Tarikere depôt of the Kadur District on the 25th June 1906 by the District Forest Officer, Kadur District.

Description	No. of logs	Quantity C. ft.	Remarks
Teak logs	50	1,200	More or less.
Matti logs	20	400	
Nandi logs	20	400	
Teak rafters	4,484	4,186	

Terms of sale.—The purchase money to be paid within three days from the date of sale.

B. HEERASINGH,
Dt. Forest Officer, Kadur Dt.

POLICE DEPARTMENT.

Dated 25th May 1906.

Descriptive roll of a person named Krishnappa, who died unclaimed in the Hospital at Santhe Sargur in Heggaddevankote Taluk on 8th May 1906 at 9-30 P. M.:—

Name ... . Krishnappa.
Caste ... ... Nayar.
Age ... ... About 45 years.
Residence ... ... Palghat.
Height ... ... 5 feet, 6 inches.
Colour ... ... Brown.

Marks of identification and other particulars:—

The deceased had a long face and nose and holes in the lobes of both ears. Tuft of hair on his head. A dupti of 9 cubits long and a check coat were found near him. It is ascertained that the deceased was living upon the profession of sawing trees in the village.

Dated 5th June 1906.

Descriptive roll of a person found dead under an avenue tree near the bungalow of Revd. Peck in Talkad on 17th March 1906:—

Name ... ... Not known.
Residence ... ... Do
Caste ... ... Do
Age ... ... About 50 or 55 years.
Complexion ... ... Dark.
Sex ... . Male.
Description ... . Has no tuft of hair on the head; has mustaches and hair on the chin.
Property found .. .. Nil.
Remarks .. ... Died of dropsy.

Dated 5th June 1906.

Descriptive roll of a person found dead on 6th April 1906 near the chattram behind Nanjundeswaraswami temple in Nanjangud :—

Name	Not known.
Sex	Male.
Residence	Not known.
Caste	Byragi.
Height	5 feet, 6 inches.
Age	50 years.
Complexion	Dark.
Descriptive marks	Long face ; no hair on the head ; body emaciated.
Property found	two pieces of cloth on the body.

MAHOMED JAFFER,
Supt. of Police, Mysore Dt.

MISCELLANEOUS.

IN THE COURT OF THE ASSISTANT COMMISSIONER AND 1ST CLASS MAGISTRATE, KOLAR GOLD FIELDS.

Property Form No. 45, *dated 9th April* 1906, *from Champion Reefs Station.*

Notice is hereby given that the marginally noted property found lying by the road-side leading from Steven's Camp to Gwallapalli village on 22nd March 1906 and produced before Court on the 31st ultimo by the Police of Champion Reefs, will be sold and proceeds credited to Government if not claimed within six months from this date.

A drum or thabala.

R. B. PLUMER,
1st Class Magistrate.

OFFICE OF THE DISTRICT MAGISTRATE, KOLAR DISTRICT.

MEMO.

Dated June 1906.

Under Section 37 of the Criminal Procedure Code, Mr. P. Subba Rao, B.A., B.L., who is appointed to act as Amildar and 3rd Class Magistrate of the Srinivaspur Taluk, as per Government Proceedings No. R. 14777—L. R. 672-05-2, dated 15th May 1906, is invested with the following additional powers :—

(1) Power to make orders prohibiting repetitions of nuisances, Section 143.
(2) Power to make orders under Section 144.
(3) Power to hold inquests, Section 174.
(4) Power to take cognizance of offences upon complaint, Section 190.
(5) Power to take cognizance of offences upon Police reports, Section 190.

C. SRIKANTESVARA AIYER,
Dist Magistrate.

TUMKUR DISTRICT.

Notice dated 26th May 1906.

The attention of the public is invited to the notification of this date of the Forest Department issued in Part II of the official Gazette in pages 862-863 of 1906, regarding the sale of lac cultivation in the Tumkur District for 1906-08.

H. RAMIAH,
for *Dy. Comr.*

MYSORE DISTRICT.

Notification dated 17th May 1906.

It is hereby notified for the information of the public, that, under the authority conveyed in Government Order No. 11423—L. B. (367-05)-4 of the 5th May 1906, the toll-gate at Panchavalli in the Hunsur Taluk will be shifted to Allurkatte from the 1st July 1906.

H. H. SPARKES,
President, Dist. Board.

SHIMOGA DIVISION.

Abstract Notification dated 26th May 1906.

Any person having a claim to the amount of Rs. 14-14-6 referred to in this office proclamation dated 26th May 1906 published at page 874 of Part II of the *Mysore Gazette* dated 7th June 1906 should appear before the undersigned at shimoga within six months from the date of the proclamation and prove his claim to the said amount. No claims preferred after the expiry of the said six months will be taken into consideration.

K. CHANDY,
Asst. Comr.

KADUR DISTRICT.

Notice dated 4th June 1906.

The right of collecting fees at the weekly market in the Koppa Municipality for the official year, *i.e.*, from 1st July 1906 to the 30th June 1907, will be sold by public auction by the Amildar of Koppa at his office at 11 A.M. on Monday the 25th June 1906.

2. The successful purchaser must collect fees only at the rates noted in the annexed schedule and at no higher rate, and only on carts and animals, etc., brought on sante days within the market premises as per annexed schedule.

3. The sale is subject to confirmation by the President of the Municipalities, Kadur District, who reserves to himself the power of refusing the highest or any bid that may be offered without assigning any reason therefor.

4. The contract amount is payable in twelve equal monthly instalments on or before the 10th of the month following that in which each instalment falls due.

5. The contractor shall pay, as soon as the sale is closed, a deposit equal to two months' instalments for the due performance of the contract. The amount in deposit will, if the conditions of the contract are complied with, be credited towards the instalments due for the last two months of the contract.

6. If the deposit is not made immediately after the close of the sale, the contract will be re-sold at the risk of the first purchaser. If the default is made in the payment of the instalment, interest at one pie per rupee per month will be levied on the amount due till the date of payment, and the unexpired portion of the contract will also be liable to be sold again at the discretion of the President, and the deficit, if any, will be recovered from the first contractor, who shall not be entitled to the profits.

7. No remission or abatement of the contract amount or compensation shall on any account whatever be claimable by the contractor.

8. The contractor is also bound to keep an account showing in detail the daily collections and it shall be open to inspection by the Taluk and District authorities.

9. In the event of a breach of the above rules on the part of the contractor or his servants, the contract will be liable to cancellation.

SCHEDULE OF FEES.

No.	Items	Koppa		
		Rs.	a.	p.
1	For every cart, laden	0	1	0
2	Do cart, unladen	0	0	3
3	Do bullock, cow, buffalo, or pony, if laden	0	0	6
4.	Do ass, laden	0	0	3
5	Do head load	0	0	1
6	Do bullock, cow, buffalo, or pony, if unladen	0	0	3
7	Sheep or goat	0	0	1

V. KRISHNA RAO, for *President.*

CHITALDRUG DISTRICT.

Notification dated 19th May 1906.

1. The right to collect tolls at the several gates in the Davangere Municipality from 1st July 1906 to 30th June 1907 will be sold by public auction in the Assistant Commissioner's Office at Davangere, by the Assistant Commissioner in charge of the Davangere group of taluks on the 12th June 1906.

2. The successful purchaser must collect tolls only at the rates noted in the annexed schedule and at no higher rates on the empty and laden carts that would pass through the toll gates from outside the limits of the Municipality.

3. The President reserves to himself the power of refusing or accepting the highest or any bid that may be offered without assigning any reason therefor.

4. The contract amount is payable in twelve monthly instalments due on or before the 10th of the following month. The contractor shall pay as soon as the sale is over, a deposit equal to two months' instalments for the due performance of the contract. He shall also furnish security for the regular payment of the monthly instalments.

5. If the deposit is not made and security is not furnished immediately after the close of the sale, the contract will be re-sold at the risk of the approved bidder. If default is made in the payment of instalments, interest at one pie per rupee per month will be levied till the date of payment and the contract will also be liable to be sold again at the discretion of the President and the deficit, if any, will be recovered from the contractor or his surety.

6. The contractor is also bound to keep an account showing the daily collections and it shall be open to inspection by Taluk and District authorities.

7. He shall also be bound to keep true accounts of traffic passing through the gates as specified in para 6.

8. The contractor will have the use of existing toll houses and gates and he will be required to keep them in good repair.

9. The contractor should conform generally to the rules published with the late Chief Commissioner's Notification No. 274, dated 4th November 1876, regarding the levy of tolls.

10. Any breach of the above rules on the part of the contractor or his servants will entail the cancellation of the contract.

SCHEDULE.

		Rs. a. p.
On every laden cart or carriage	...	... 0 2 0
Do empty cart or carriage	...	... 0 1 0

H. RAMANUJIENGAR, *President.*

Dated 20th May 1906.

It is hereby notified for general information that in consideration of deficient rainfall and consequent drought, Government have been pleased in their Proceedings No. 14086-8—Agri. 116-05-7, dated 1st May 1906, to remit in its entirety the Hubanni amount for the year 1905-06 for the whole district and that under the sanction conveyed in the said Government Proceedings in the case of dry lands, the collection of khists in the undermentioned affected tracts of the district will be made in four instalments beginning from 1st May 1906 :—

Taluk.		*Hobli.*		*Village.*
Chitaldrug	...	Chitaldrug	...	1. Siddavanahalli.
				2. Ingaladahal.
				3. Kunchiganahal
				4. Pallavagere.
				5. Jampannaikenkote.
				6. Dyamavvanahalli.
				7. Gonoor.
				8. Kallenahalli
				9. Medakerepur.
				10. Chikkenhalli.
				11. Sajjankere.
				12. Mallapura.
				13. Pillekerenahalli.
Do	...	Hireguntanur	...	14. Vijapur.
				15. Talkunte.
				16. Ballekatte.
				17. Beeravara.
				18. Kariyammanahalli.
				19. Mallenahalli.
Do	...	Bharmasagar	...	20. Zelagodu.
				21. Adavigollarahalli.
				22. Ajjappanahalli.
				23. Bastihalli.
				24. Hullehal.
				25. Gowrammanahalli.
				26. Basavansivankere.

Taluk.	*Hobli.*	*Village.*
Chitaldrug ...	Turavanur ...	27. Turavanur.
		28. Belagatta.
		29. Chikjagalur.
		30. Veeramedakerepura.
		31. Baggalrangavvanhalli.
		32. Ragalobanhalli.
		33. Bommakkanhalli.
		34. Hayakal.
		35. Siddavandurga.
Challakere ...	Challakere ...	The entire hobli.
	Naikenhatti ...	The entire hobli.
Hosdurga ...	Budihal ...	1. Budihal.
		2. Saderhalli.
		3. Kachapura.
		4. Vengalapura.
		5. Harenahalli
		6. Hulkenhalli.
		7. Heggere.
		8. Kadavagere.
		9. Kainadu.
		10. Nerlakere.
		11. Naigere.
		12. Somasandra.
		13. Agrahara.
Davangere ...	Davangere ...	1. Kodihalli.
		2. Dodbathi.
		3. Kadlabal.
		4. Arasapur.
		5. Obajjihalli.
		6. Malgondanhalli.
Do ...	Hadadi ...	7. Nagarasanhalli.
		8. Kolenahalli.
		9. Kanagondanhalli.
		10. Jadaganhalli.
		11. Mudihadadi.
		12. Sirganahalli.
		13. Ballur.
		14. Batlagatte.
Jagalur ...	Jagalur ...	The entire hobli.
Harihar Sub-Taluk ...	Harihar ...	1. Pamenahalli.
		2. Ditur.
		3. Kurubanhalli.
		4. Karlahalli.
		5. Hottiganahalli.
		6. Kenchanahalli.
		7. Chikkabidare.
		8. Salaganahalli.
		9. Sarathi.
Do ...	Malebennur ...	10. Dhoolihole.
		11. Kunibelalkere.
		12. Ingalagondi.
		13. Huleganhole.
		14. Yalehole.
		15. Adapur.

Abstract Notification dated——May 1906.

It is hereby notified that Jodi Agasanakallu and Hulegondi villages, Chitaldrug Hobli, Chitaldrug Taluk, will be sold by public auction in the office of the Amildar of the taluk on the 19th July 1906, on account of arrears of revenue due to Government.

For further particulars see page 868 of Part II of *Mysore Gazette* No. 23, dated 7th June 1906.

Abstract Notification dated 29th May 1906.

It is hereby notified for public information that Jodi Kasavanahalli village in the Bharmasagar Hobli of the Chitaldrug Taluk will be sold for arrears of Land Revenue due to Government on Monday the 9th July 1906, at the Chitaldrug Taluk Cutcherry.

For further particulars *vide* page No. 867, Part II of the *Mysore Gazette* dated 7th June 1906.

H. RAMANUJAIENGAR,
Dy. Comr.

IN THE COURT OF THE MUNSIFF AT KOLAR.

Miscellaneous Application No. 461 *of* 1905-06.

In the matter of the estate of Munisami Mudaliar, resident of Kolar ... ... *Deceased.*

Chengalaraya Mudaliar ... ... *Applicant.*

Whereas Chengalaraya Mudaliar, resident of Kolar, claiming to be the son of the said Munisami Mudaliar, deceased, has applied to this Court for a certificate under Regulation, VII of 1901, to collect debts payable to the extent of Rs. 375-8-0 in respect of the estate of the said Munisami Mudaliar, deceased, resident of Kolar.

Notice is hereby given of the said application; and all claimants in the estate of the said Munisami Mudaliar, deceased, are invited to appear in this Court on Friday the 22nd day of June 1906, when the petition of the said Chengalaraya Mudaliar, applicant, will be heard and the right to the certificate will be determined.

Given under my hand and the seal of the Court, this 7th day of June 1906.

J. E. HOLT,
Munsiff.

IN THE COURT OF THE SUBORDINATE JUDGE, HASSAN.

Mis. Application No. 605 *of* 1905-06.

Present : C. B. Seshagiri Rao, Esq., Subordinate Judge.

In the matter of the estate of Chennasubbasetti, resident of Belur ... *Deceased.*

Pamadi Dasaratharamaiya, resident of Bangalore ... ... *Applicant.*

Whereas Pamadi Dasaratharamaiya, a resident of Bangalore, claiming to be the purchaser of certain debts due to the estate of Chennasubbasetti, deceased, has applied to this Court for a certificate under Regulation, VII of 1901, to collect the said debts to the extent of Rs. 5,528, due to the estate of the said Chennasubbasetti, deceased.

Notice is hereby given of the said application ; and all claimants in the estate of the said Chennasubbasetti, deceased, are invited to appear before this Court on the 4th day of July 1906, when the petition of Pamadi Dasaratharamaiya, applicant, will be heard and the right to the certificate determined.

Given under my hand and the seal of the Court this 5th day of June 1906.

Mis. Application No. 616 *of* 1905-06.

In the matter of the estate of Chennasubbasetti, resident of Belur ... *Deceased.*

Pamadi Sampangiramaiya, son of Pamadi Dasaratharamaiya, resident of Bangalore ... ... *Applicant.*

Whereas Pamadi Sampangiramaiya, a resident of Bangalore, claiming to be the purchaser of certain debts due to the estate of the said Chennasubbasetti, deceased, has applied to this Court for a certificate under Regulation, VII of 1901, to collect the said debts to the extent of Rs. 975, due to the estate of the said Chennasubbasetti, deceased.

Notice is hereby given of the said application; and all claimants in the estate of the said Chennasubbasetti, deceased, are invited to appear before this Court on the 4th day of July 1906, when the petition of Pamadi Sampangiramaiya, applicant, will be heard and the right to the certificate determined.

Given under my hand and the seal of the Court this 5th day of June 1906.

C. B. SESHAGIRI RAO,
Subordinate Judge.

IN THE COURT OF THE MUNSIFF OF HOLE-NARSIPUR.

PRESENT: N. T. GOPALIENGAR, ESQ., B.A., LL.B., MUNSIFF.

Miscellaneous Application No. 337 *of* 1905-06.

In the matter of the estate of Alasingrachar, School Master, Birur ... *Deceased.*

Rangamma, wife of the deceased Alasingrachar, resident of Algodanahalli, Hole-Narsipur Taluk ... ... *Applicant.*

Whereas Rangamma, the abovenamed applicant, claiming to be the wife of Alasingrachar, deceased has applied for a certificate under Regulation VII of 1901, to collect Rs. 271 due to the estate of the said deceased, under Policy No. 7745 of the Mysore State Life Assurance.

Notice is hereby given of the said application; and all claimants to the estate of the said deceased, are required to appear before this Court on Saturday the 30th June 1906, at 11 A.M., when the petition of the said applicant will be heard and the right to the certificate determined.

Given under my hand and seal, this 4th day of June 1906.

N. T. GOPALIENGAR,
Munsiff.

IN THE COURT OF THE SUBORDINATE JUDGE, SHIMOGA.

PRESENT: S. VARADARAJA IYENGAR, ESQ., SUBORDINATE JUDGE.

Miscellaneous Application No. 166 *of* 1905-06.

In the matter of the estate of V. Narayana Rao ... ... *Deceased.*

Kuppu Rao, minor, by guardian, his maternal uncle Arunachala Rao ... *Applicant.*

Whereas Kuppu Rao, the abovenamed applicant, resident of Madras (Black Town), claiming to be the son of the said V. Narayana Rao, deceased, has applied to this Court for a certificate under Regulation VII of 1901, to collect debts payable in respect of the estate of V. Narayana Rao, deceased, resident of Sorab.

Notice is hereby given of the said application; and all claimants in the estate of the said V. Narayana Rao, deceased, are invited to appear in this Court on Friday the 13th day of July 1906, when the petition of the said Kuppu Rao, minor, by Arunachala Rao, applicant, will be heard and the right to the certificate will be determined.

Given under my hand and the seal of this Court, this the 8th day of June 1906.

Miscellaneous Application No. 168 *of* 1905-06.

In the matter of the estate of Jingadi Mylarappa ... ... *Deceased.*

Rukmaboyi, widow of Mylarappa ... ... *Applicant.*

Whereas Rukmaboyi, resident of Tirthahalli, claiming to be the wife of the said Jingadi Mylarappa, deceased, has applied to this Court for a certificate under Regulation VII of 1901, to collect debts payable in respect of the estate of Jingadi Mylarappa, deceased, resident of Tirthahalli.

Notice is hereby given of the said application; and all claimants in the estate of the said Jingadi Mylarappa, deceased, are invited to appear in this Court on Friday the 13th day of July 1906, when the petition of the said Rukmaboyi, applicant, will be heard and the right to the certificate will be determined.

Given under my hand and the seal of this Court, this the 8th day of June 1906.

S. VARADARAJA IYENGAR,
Subordinate Judge.

IN THE COURT OF THE MUNSIFF OF CHITALDRUG.

Insolvency Miscellaneous Case No. 595 *of* 1905-06.

In the matter of the application of Hottappa, son of Vobanayaka, resident of Abbina Hole, praying to be declared an insolvent.

The above application coming on for hearing before S. Krishna Rao, Esq., B.A., B.L., in the presence of Messrs. R. Srinivasa Rao for Mr. M. Raja Rao, A. Singrachar and B. Lakshminaranappa, pleaders for the petitioner, 1st counter-petitioner and 2nd counter-petitioner, respectively, other counter-petitioners being absent, *ex parte*, it is ordered that the said Hottappa be declared an insolvent and that Ratni Sripathi Rao, the Deputy Nazir of this Court, be appointed as receiver of the insolvent's property.

Schedule of debts.

No.	Name of creditor	Amount	When contracted
		Rs.	
1	Dodda Virupakshappa, resident of Babur, Hiriyur Taluk ...	170	Due under a decree in O. S. No. 97 of 1902-03 on the file of the late Chitaldrug Munsiff's Court.
2	Channamma *kom* Gurupadayya, resident of Sidlayyanakote, Hiriyur Taluk ..	50	Due under a decree.
3	Government (Mr. H. Ramanuja Iyengar, Deputy Commissioner, Chitaldrug District)	250	Takavi amount due to Government.
4	Hanumegowda, resident of Gulya, Hiriyur Taluk	150	Due under a decree.
5	Gollara Giddajja, resident of Gollarhatti, Hiriyur Taluk	20	Due under a bond.

Given under my hand and the seal of the Court, this the 1st day of June 1906.

S. KRISHNA RAO,
Munsiff.

KOLAR DIVISION.

Notification dated 2nd June 1906.

The attention of the public is invited to the notification in the *Mysore Gazette* No. 23, dated 7th June 1906, calling for tenders for constructing quarters for the staff of the new Hospital at Robertsonpet on the Kolar Gold Fields. Each tender must be accompanied by a deposit of Rs. 1,000 in cash or Government Promissory Notes as earnest money.

K. KRISHNAIENGAR,
Executive Engineer.

MYSORE DIVISION.

Abstract.

Invites attention to the notification published in the *Mysore Gazette*, dated 31st May 1906, page 823, Part II, inviting tenders for repairing Kagalwadi tank, Registered No. 48, Chamrajnagar Taluk.

Notice dated 4th June 1906.

A sum of Rs. 107-6-11 (Rupees one hundred and seven, annas six and pies eleven) being the amount deposited as security, due to Taluk Mestri R. Guru Rao, deceased, is outstanding in the deposit accounts since May 1905.

The legal heir of the deceased is hereby informed that he should present himself before the undersigned with necessary certificate to receive payment of the amount within a month from the date of this notice. Failing to do so, the amount will be credited to Government as unclaimed.

B. SUBBA RAO,
Executive Engineer.

BANGALORE CITY MUNICIPALITY.

Notice dated 11th June 1906.

The following business will be transacted at an ordinary meeting of the Municipal Commissioners for the City of Bangalore, to be held at their office premises at 7-30 A.M. on Thursday the 21st June 1906 :—

Deferred Proposition.

1. Sub-Committee's report suggesting revision of establishment under several branches of the City Municipal service with a proposition statement embodying their proposals in order to introduce reform in the working of the Municipality, called for in para 13 of Government Order on the report of the Municipal Financial Committee.

Ordinary Propositions.

1. Cash Account Current, Demand, Collection and Balance Statements, Mortuary return, Progress report of works, Memo of visitors to the Srinivasa Mandiram Library, City Municipal English and Kannada Schools returns, Maternity return, Langarkhana return, statement of materials, and statement of rewards for the destruction of dogs and return of prosecutions for May 1906.

2. Disposal of the following tenders for 1906-07 :—

1 For collecting tolls in the City toll-gates.
2 Do do Tumkur road toll-gate.
3 Do fees in the vegetable, fish and fowl markets.
4 Do do Waddar cart-stand.
5 Do do old timber yard.
6 Do do Taramandalpet.
7 Do do slaughter house.
8 For the right of collecting street-sweepings, etc.
9 For collecting toll in the toll-gates of certain cross roads.
10 Result of the sale of pasture lands.

3. Application from Mr. A. Srinivasa Iyengar and Chitragar Lakshmaiya for part of mandi site near the Municipal well in New Tharagupet.

4. Applications from the Rameswara Temple Committee, Mr. Shama Rao and Mr. Saligram Subba Rao for the hollow ground to the east of the temple in the 1st main road in Chamarajendrapete.

5. Proposal to abolish the levy of toll on bicycles and tricycles at the joint toll-gate of Nandidrug road as proposed by the President of the Civil and Military Station Municipality.

6. The General and Revenue Secretary's docket No. 12410—Ml. (51-02), dated the 3rd June 1906, calling for a report on the closing of a conservancy lane between sites Nos. 78 and 79 owned by Mr. K. Subba Rao in the VIII Block in the Basavangudi Extension.

7. Proposal to convey the thanks of the Board to Mr. Hajee Ismail Sait for having allowed the Municipal Dispensary of the II Division to be held in the old Taluk Cutcherry building free of rent after its purchase by him, for eight months from 11th October 1905 to 5th May 1906.

8. Application of Rao Bahadur Annasamy Mudaliar for a portion of the road margin to the north of his mandi in New Tharagupet on the southern side of the Mysore road.

9. Estimate amounting to Rs.—for opening out a lane.

10. Estimate amounting to Rs.—for constructing a flight of steps to the honda in the Sampangi tank.

11. Remission statements of arrears of taxes and scavenging cess amounting to Rs. 4,344-12-8 and Rs. 1,055-2-6, respectively, irrecoverable owing to death, desertion, poverty or other causes.

12. The Senior Surgeon and Sanitary Commissioner's docket No. 2205-P, dated the 8th May 1906, stating that the Municipality should bear a moiety of the cost of all items of expenditure relating to the Plague establishment in the City including the repair of camp sheds, etc.

13. Papers relating to the bills presented by Mr. Pleader Sitaramaiya in adjustment of advances paid to him from time to time on account of fees payable to him for conducting Municipal cases.

A. S. NAGAVKAR,
President.

BOWRINGPET MUNICIPALITY.

Notice is hereby given that the contract for the exclusive right of collecting fees for slaughtering sheep and goats in the slaughter enclosure at Bowringpet (in the old Shandy ground) will be put up to public auction and sold to the highest bidder, at the Taluk Office, Bowringpet, at 11 A.M., on the 23rd June 1906.

The successful bidder will be required to deposit at once, in cash, or currency, one-fourth of the money, or his bid will be cancelled, and the right to collect fees for slaughtering animals re-auctioned, any loss to which the Municipal Board may be thereby put to be borne by the said bidder. The balance of the purchase money, etc., to be paid thereafter, in eleven (11) regular monthly instalments, commencing from the 1st August 1906.

The contractor will be called upon to enter into the following agreements with the Vice-President :—

(1) To slaughter only in the license slaughter-house or in such place as the Municipal Board may from time to time direct.

(2) To keep the slaughter enclosures clean and in sanitary condition to the satisfaction of the Sanitary Inspector or other officer of the Board.

(3) To remove all skins, carcasses, etc., immediately from the slaughter enclosures.

(4) To remove without delay all bones, horns and offal, from the slaughter enclosures and bury them in such place as may be pointed out by the Sanitary Inspector.

(5) The contractor will also be called upon to take charge of the slaughter enclosures on the 30th June 1906, and on the expiry of the contract to hand over the said slaughter enclosures to the Vice-President or such other officer as he may depute for the purpose, in good order and repair.

The undersigned reserves to himself the right to refuse any bid without assigning any reason.

C. SESHADRIENGAR, for *President.*

BANGALORE CENTRAL JAIL.

Notification dated 28th May 1906.

Notice is hereby given that sealed tenders will be received up to 10 A.M. on Saturday the 16th June 1906 by the Superintendent of the Bangalore Central Jail for the supply, by contract, of mutton required for the use of the said Jail for the period of one year from 1st July 1906 to 30th June 1907, both days inclusive.

Full details of supply required and conditions for tenders are published in the *Mysore Gazette* of 31st May 1906.

G. HUME WRIGHT,
Supt., Central Jail.

MYSORE GOVERNMENT MUSEUM, BANGALORE.

Visitors to the Mysore Government Museum, Bangalore, during the month of May 1906.

Signatures made in—								Total No. of signatures		Unable to sign No. of—		Total No. of visitors	Daily average, exclusive of Sundays and holidays.
English													
Europeans	Natives	Tamil	Telugu	Kanarese	Hindustani	Marathi	Guzarati	Males	Females	Men and boys	Women and girls		
504	1,059	129	35	402	33	14	12	2,121	67	8,076	6,975	17,239	663

J. CAMERON,
Supt., Mysore Govt. Museum, Bangalore.

Notification No. 252, *dated 6th June* 1906.

The following Co-operative Society has been registered under Section 6, clause (2), of the Mysore Co-operative Societies Regulation, III of 1905, with effect from the date mentioned against it:—

Name—
"The Co-operative Agricultural Society, Limited, Koppa.

Place—Koppa.
Date of Registration—6th June 1906.

M. SHAMA RAO,
Registrar, Co-operative Societies in Mysore.

GOVERNMENT CENTRAL BOOK DEPOT, BANGALORE.

Notification dated 23rd May 1906.

The undermentioned books are available for sale at the Central Book Depot, Bangalore:—

	Rs.	a.	p.
Kannada Balabodhe, Part I	0	1	0
Do Brief History of Mysore	0	2	6
Savitre Charitre	0	2	0

S. ABDUL HAI, *Curator.*

MYSORE GOVERNMENT CENTRAL PRESS.

Notice dated 29th May 1906.

Notice is hereby given that the right of collecting the manure and removing the same from the latrines of the Government Press will be sold by public auction on 20th June 1906, to the highest bidder for a period of three years commencing from 1st July 1906 to 30th June 1909.

C. H. YATES,
Supt., Govt. Press.

MORTUARY REGISTER.

FOR THE WEEK ENDING 4TH MAY 1906.

Bangalore City.

Estimated population according to the Census of 1901. { Males ... 35,964; Females ... 33,483 } Total ... 69,447

Diseases	M.	F.	Total
Plague	...	...	...
Cholera	...	...	...
Small-pox	..	...	...
Fevers	2	6	8
Bowel-complaints ...	5	5	10
Suicide	...	...	...
Wounding	...	1	1
Accident	...	1	1
Snake-bite or killed by wild beasts.	...	..	...
All other causes ...	23	23	46
Total ...	30	36	66
Births during the week ...	15	5	20

Mysore City.

Estimated population according to the Census of 1901. { Males ... 34,328; Females ... 33,783 } Total ... 68,111

Diseases	M.	F.	Total
Plague	...	...	...
Cholera	...	...	...
Small-pox	...	.	...
Fevers	1	...	1
Bowel-complaints ...	1	2	3
Suicide	...	...	...
Wounding	...	...	...
Accident	...	...	...
Snake-bite or killed by wild beasts.	...	...	...
All other causes ...	7	7	14
Total ...	9	9	18
Births during the week ...	14	9	23

FOR THE WEEK ENDING 11TH MAY 1906.

Diseases	M.	F.	Total
Plague	...	...	...
Cholera	...	...	...
Small-pox	...	2	2
Fevers	2	4	6
Bowel-complaints ...	4	1	5
Suicide	...	...	...
Wounding	...	...	...
Accident	...	...	...
Snake-bite or killed by wild beasts.	...	...	...
All other causes ...	24	41	65
Total ..	30	48	78
Births during the week ...	16	12	28

Diseases	M.	F.	Total
Plague	...	...	...
Cholera	...	...	...
Small-pox	...	...	...
Fevers	3	4	7
Bowel-complaints ...	3	1	4
Suicide	...	...	...
Wounding	...	...	...
Accident	...	...	...
Snake-bite or killed by wild beasts.	...	...	...
All other causes ..	8	5	13
Total ...	14	10	24
Births during the week ..	18	9	27

By Order,
T. S. NANJAPPA,
Personal Asst. to the Sr. Surgn. & Sany. Comr., M. G.

CINCHONA FEBRIFUGE.

Cinchona Febrifuge can be purchased by all Government Officers and by any one taking *six pounds* at a time from the Superintendent, Botanical Garden, Calcutta, at the following rates:—per four-ounce tin, *Rs.* 2-8; per eight-ounce tin, *Rs.* 5; per pound tin, *Rs.* 10. The general public can be supplied by the Superintendent, Botanical Garden, *for Cash only*, at the undernoted rates:—per four-ounce tin, *Rs.* 3; per eight-ounce tin, *Rs.* 6; per pound-tin, *Rs.* 12. This medicine is also sold by the principal European and Native Druggists in Calcutta. Postage—four annas per four-ounce tin, eight annas per eight-ounce tin, and twelve annas per pound-tin in addition to the foregoing rates.

MYSORE GOVERNMENT METEOROLOGICAL DEPARTMENT.

Monthly Means of Meteorological Observations for May 1906.

	BANGALORE	MYSORE	HASSAN	CHITALDRUG
Height of Observatory above Sea Level	3,021 ft.	2,518 ft.	3,091 ft.	2,405 ft.
Barometer (red. to 32°F.) ...	26·842	27·335	26·806	27·419
Temperatures in shade:—				
Daily mean dry ...	82·7	82·3	79·4	84·8
Daily max. do ...	95·9	94·8	93·3	97·5
Daily min. do ...	70·5	70·7	67·3	72·8
Daily mean wet ...	68·6	71·0	69·5	70·7
Daily minimum wet ...	65·2	67·9	65·3	66·9
Temperatures of Radiation:—				
Daily max. Solar Heat in Vacuo	147·5	...	...	...
Daily min. Temp. on Grass	68·4	...	...	...
Rainfall—Total in inches ...	1·36	4·45	2·63	1·23
Wind Direction (daily mean) ...	W S W	W S W	S W b S	W b S
Velocity (miles per day) ...	207	260	91	223
Clear Sky: Daily percentage ...	63	41	50	73
Bright Sunshine: Hours Daily	9·2	...	...	...

J. COOK,
Director of Meteorology in Mysore.

Dated 11*th June* 1906.

Daily Means of Observations for the Week Sunday 27th May to Saturday 2nd June 1906.

No.	BANGALORE	Sunday 27	Monday 28	Tuesday 29	Wednesday 30	Thursday 31	Friday 1 June	Saturday 2
1	Barometer red. to 32° F.	26·829	26·804	26·818	26·816	26·816	26·802	26·844
2	Daily Barometric range	·124	·119	·114	·125	·115	·124	·131
3	Mean Dry Temperature in shade	81·4	82·7	81·9	80·5	79·9	81·4	80·4
4	Maximum do	93·1	95·4	94·6	93·8	92·5	94·3	91·5
5	Minimum do	70·3	70·4	70·1	68·4	67·7	69·2	69·2
6	Daily range of do	22·8	25·0	24·5	25·4	24·8	25·1	22·3
7	Mean Wet Temperature in shade	69·3	70·1	69·5	69·1	68·6	70·1	71·4
8	Minimum do	66·2	66·0	64·7	66·0	63·6	65·3	66·4
9	Pressure of Aqueous Vapour	5·78	·601	·592	·587	·579	·627	·697
10	Humidity	52	54	52	56	55	56	65
11	Wind Vely. in Miles p. day to 8 A. M	293	303	301	289	285	225	192
12	Mean Wind Direction	W S W	W S	W	W b S	W b N	N W b W	W
13	Rainfall in inches to 8 A.M.	0	0	0	0·06	0	0	0·43
14	Total Rainfall from 1st January	3·03	3·03	3·03	3·09	3·09	3·09	3·52
15	Per cent of Cloudy Sky	83	33	23	47	50	20	80
16	Character of Weather	Fine passing clouds	Fine passing clouds	Distant thunder and lightning	Thunder storm	Fine passing clouds	Distant thunder and lightning	Fine passing clouds

MYSORE GOVERNMENT METEOROLOGICAL DEPARTMENT.

Daily Means of Observations for the Week Sunday 27th May to Saturday 2nd June 1906.

No.	MYSORE	Sunday 27	Monday 28	Tuesday 29	Wednesday 30	Thursday 31	Friday 1 June	Saturday 2
1	Barometer red. to 32° F.	27·331	27·306	27·327	27·322	27·302	27·290	27·329
2	Daily Barometric range	·114	·114	·113	·119	·123	·137	·136
3	Mean Dry Temperature in shade	?	80·1	81·1	78·7	80·4	81·2	79·5
4	Maximum do	92·0	92·4	92·8	91·2	93·3	94·4	92·7
5	Minimum do	70·3	69·7	70·4	69·0	67·7	68·6	71·6
6	Daily range of do	21·7	22·7	22·4	22·2	25·6	25·8	21·1
7	Mean Wet Temperature in shade	71·4	71·8	71·8	70·9	69·1	69·6	70·8
8	Minimum do	68·4	68·4	68·8	67·1	66·3	67·0	68·7
9	Pressure of Aqueous Vapour	?	·685	·659	·663	·566	·589	·669
10	Humidity	?	61	58	63	52	54	67
11	Wind Vely. in Miles p. day to 8 A.M.	298	329	379	553	345	228	251
12	Mean Wind Direction	W S W	W b S	W b S	W S W	W b S	W b N	S W
13	Rainfall in inches to 8 A.M.	0	0	0	0	0	0	0
14	Total Rainfall from 1st January	5·30	5·30	5·30	5·30	5·30	5·30	5·30
15	Per cent of Cloudy Sky	60	40	37	77	80	53	100
16	Character of Weather	Fine passing clouds	Windy	Strong wind	Strong wind	Fine passing clouds	Fine passing clouds	Gloomy

744

MYSORE GOVERNMENT METEOROLOGICAL DEPARTMENT.

Daily Means of Observations for the Week Sunday 27th May to Saturday 2nd June 1906.

No.	HASSAN	Sunday 27	Monday 28	Tuesday 29	Wednesday 30	Thursday 31	Friday 1 June	Saturday 2
1	Barometer red. to 32° F.	26·806	26·778	26·797	26·782	26·772	26·773	26·805
2	Daily Barometric range	·093	·087	·079	·093	·082	·092	·116
3	Mean Dry Temperature in shade	77·8	77·3	76·9	77·5	77·2	75·0	78·4
4	Maximum do	89·4	89·0	89·4	89·8	90·1	93·1	91·4
5	Minimum do	68·1	67·5	66·3	65·7	65·6	65·4	67·0
6	Daily range of do	21·3	21·5	23·1	24·1	24·5	27·7	24·4
7	Mean Wet Temperature in shade	69·3	69·3	69·0	68·8	67·9	67·2	69·6
8	Minimum do	66·2	66·5	64·5	64·5	64·1	64·3	65·1
9	Pressure of Aqueous Vapour	·612	·615	·620	·594	·544	·579	·625
10	Humidity	57	58	58	55	50	61	58
11	Wind Vely. in Miles p. day to 8 A.M.	109	112	138	119	135	101	67
12	Mean Wind Direction	W N W	W b N	W b N	W N W	W b N	N W b W	N W b N
13	Rainfall in inches to 8 A.M.	0	0	0	0	0	0	0·09
14	Total Rainfall from 1st January	2·85	2·85	2·85	2·85	2·85	2·85	2·94
15	Per cent of Cloudy Sky	67	40	50	43	67	57	50
16	Character of Weather	Fine passing clouds	Fine passing clouds	Fine passing clouds	Fine passing clouds	Fine passing clouds	Fine passing clouds	Distant thunder

745

MYSORE GOVERNMENT METEOROLOGICAL DEPARTMENT.

Daily Means of Observations for the Week Sunday 27th May to Saturday 2nd June 1906.

No.	CHITALDRUG	Sunday 27	Monday 28	Tuesday 29	Wednesday 30	Thursday 31	Friday 1 June	Saturday 2
1	Barometer red. to 32° F.	27·401	27·380	27·390	27·386	27·373	27·385	27·427
2	Daily Barometric range	·123	·120	·107	·110	·127	·136	·141
3	Mean Dry Temperature in shade	83·2	83·6	82·3	82·4	82·5	82·6	82·6
4	Maximum do	94·7	95·2	94·2	94·1	94·5	95·3	93·7
5	Minimum do	72·4	72·6	71·0	71·2	70·9	70·6	71·8
6	Daily range of do	22·3	22·6	23·2	22·9	23·6	24·7	21·9
7	Mean Wet Temperature in shade	70·0	71·3	70·3	69·9	69·3	68·9	69·5
8	Minimum do	68·9	69·4	68·1	68·4	65·5	66·8	66·2
9	Pressure of Aqueous Vapour	·563	·617	·599	·576	·572	·548	·573
10	Humidity	49	53	53	52	49	48	51
11	Wind Vely. in Miles p. day to 8 A. M.	278	279	296	305	283	250	214
12	Mean Wind Direction	W b S	W b S	W b N	W b N	W b N	N W b W	N W b W
13	Rainfall in inches to 8 A. M.	0	0	0	0	0	0	0
14	Total Rainfall from 1st January	2·47	2·47	2·47	2·47	2·47	2·47	2·47
15	Per cent of Cloudy Sky	40	37	17	33	33	27	30
16	Character of Weather	Fine passing clouds	Fine passing clouds	Fine passing clouds	Fine passing clouds	Fine passing clouds	Fine passing clouds	Fine passing clouds

Dated 8th June 1906.

J. COOK, *Director of Meteorology.*

Abstract Statement of Plague Cases and Deaths in the Mysore Province for the week ending Friday the 8th June 1906.

Place	During the week ending 8th June 1906		During the week ending 1st June 1906		Figures for the corresponding week of last year		Number of infected villages
	Attacks	Deaths	Attacks	Deaths	Attacks	Deaths	
Bangalore City	...	...	1	...	1	...	..
Mysore City	...	...	...	...	...	...	...
Bangalore District	..	..	1	...	3	2	...
Mysore District	...	...	3	2	7	4	1
Kolar District (excluding Gold Fields)	...	...	...	...	...	...	...
Kolar Gold Fields	...	...	...	...	...	...	..
Tumkur District	...	...	...	...	10	6	...
Hassan District	3	2	3	2	...	...	1
Chitaldrug District	...	...	...	...	...	...	...
Kadur District	1	1	4	4	...	...	2
Shimoga District	...	...	...	...	1	1	...
Total ...	4	3	12	8	22	13	4

T. S. NANJAPPA,
for *Sr. Surgn. & Sany. Comr., M. G.*

748

The Mysore Gazette.

Vol. 41.] PUBLISHED BY AUTHORITY. [No. 24.

BANGALORE, THURSDAY, JUNE 14, 1906.

PART III.

Legislative Measures and Rules thereunder.

Notification No. J. 3491—*Pol.* 108-05-21, *dated* 13*th June* 1906.

With reference to item (10) of Rule 1 of the Arms Rules of the 26th December 1905, the Government of His Highness the Maharaja are pleased to direct that each village patel be allowed to hold free of license only a single fire arm in virtue of his office, and that if he requires more he should apply for a license for such additional arms like any other person and abide by the orders of the District Magistrate in the matter.

By Order,

K. S. CHANDRASEKHARA AIYAR,

Dy. Secy. to Govt., Gen. & Rev. Dept.

749

The Mysore Gazette.

VOL. 41.] PUBLISHED BY AUTHORITY. [No. 24.

BANGALORE, THURSDAY, JUNE 14, 1906.

PART IV
OFFICIAL PAPERS.

Season Report for the Week ending with the 23rd Saturday in 1906 (*9th June* 1906).

District and Station.	Rainfall up to 8 A.M. on Saturday.					Price of food grains in seers per rupee and market fluctuations in prices of food grains.		
	This week	Last ten years' average for the corresponding week.	Up to the end of the week from 1st January 1906.					
			This year.	Average of past ten years.	Excess (+) or defect (—) of column 4 compared with column 5.			
1	2	3	4	5	6	7		
	I. c	I. c.	I. c.	I. c.	I. c.		This week.	Past week.	Past ten years' fortnightly average.
							Seers	Seers.	Seers.
BANGALORE. Bangalore C. & M. Station ...	... 17	... ...	... 17	.. ...	.. ...		6·50	6·50	9·28
" City & Taluk...	.. 26	.. 43	3 59	7 45	— 3 86	Rice, 2nd sort.			
Hoskote ...	... 62	... 85	1 84	7 47	— 5 63		15·00	16·00	21·83
Dodballapur ...	... 26	.. 94	1 71	8 3	— 6 32	Ragi	10·75	10·50	...
Nelamangala ...	1 ...	... 55	3 60	7 8	— 3 48	Kulthi	8·00	8·00	10·65
Kankanhalli ...	1 29	... 74	5 51	8 56	— 3 5	Kadale			
Magadi ...	1 12	... 60	1 47	6 12	— 5 65				
Channapatna ...	... 15	... 54	4 7	8 ..	— 3 93				
Anekal ...	1 16	... 91	5 53	9 22	— 3 69				
Devanhalli ...	1 19	... 54	2 23	7 40	— 5 17				
Closepet ...	... 63	... 49	5 24	8 35	— 3 11				
District average...	... 77	.. 66	3 48	7 78	— 4 30				
KOLAR. Kolar ...	... 85	.. 88	2 23	6 26	— 4 5				
Bowringpet ..	... 35	1 35	2 41	6 61	— 4 20	Rice, 2nd sort.	7·25	7·00	9·40
Chintamani ...	... 10	... 90	1 14	5 47	— 4 33				
Mulbagal ...	1 79	1 29	4 11	5 21	— 1 10	Ragi	15·00	15·00	24·30
Sidlaghatta ...	1 51	1 19	1 87	6 47	— 4 60	Kulthi	12·00	12·00	..
Chikballapur ...	... 15	... 83	5 23	7 66	— 2 43	Kadale	9·00	9·00	9·30
Bagepalli ...	... 12	... 56	1 88	3 48	— 1 60				
Goribidnur ...	1 15	... 61	2 67	4 94	— 2 27				
Malur ...	1 18	1 18	4 60	6 98	— 2 38				
Srinivaspur ...	... 40	... 99	2 47	6 73	— 4 26				
Gudibanda ...	1 36	... 82	3 33	4 41	— 1 8				
District average...	.. 89	.. 96	2 90	5 84	— 2 94				
TUMKUR. Tumkur ...	1 25	1 10	3 7	8 23	— 5 16				
Maddagiri ...	1 36	... 82	2 44	5 14	— 2 70				
Chiknayakanhalli ..	... 58	1 3	3 38	7 93	— 4 55	Rice, 2nd sort.	7·00	7·00	9·40
Sira ...	... 65	1 2	2 46	6 41	— 3 95				
Gubbi ...	... 20	1 9	2 9	6 26	— 4 17	Ragi	13·00	13·00	25·80
Tiptur ...	... 22	1 13	.. 99	8 19	— 7 20	Kulthi	11·50	11·50	...
Pavagada ...	1 50	.. 52	1 50	4 6	— 2 56	Kadale	7·00	7·00	9·58
Kunigal ...	... 32	1 39	4 11	6 18	— 2 7				
Koratagere ..	1 23	.. 95	2 53	5 44	— 2 91				
Turuvekere ...	1 20	1 46	3 52	6 69	— 3 17				
District average...	... 85	1 5	2 61	6 45	— 3 84				

District and Station.	Rainfall up to 8 A. M. on Saturday.					Price of food grains in seers per rupee and market fluctuations in prices of food grains.			
	This week.	Last ten years' average for the corresponding week.	Up to the end of the week from 1st January 1906.						
			This year.	Average of past ten years	Excess (+) or defect (−) of column 4 compared with column 5				
1	2		3		4	5	6	7			
	I.	c.	I.	c.	I. c.	I. c.	I. c.		This week Seers.	Past week Seers	Past ten years fortnightly average. Seers.
MYSORE.											
Mysore	...	9	...	83	6 76	7 95	−1 19				
Chamrajnagar	...	..	...	52	2 91	10 76	−7 85				
Seringapatam	...	92	...	80	4 80	6 78	−1 98	Rice, 2nd sort.	7·12	8·00	9·88
Hunsur	1	20	1	4	4 66	8 84	−4 18				
Yedatore	...	77	...	81	4 55	7 72	−3 17	Ragi	12·00	14·00	21·29
Heggaddevankote	...	10	..	38	3 74	12 21	−8 47	Kulthi	11·00	12·00	...
Gundlupet	1	6	...	22	6 9	8 25	−2 16	Kadale	9·00	9·00	10·43
Nanjangud	...	10	...	43	2 99	7 94	−4 95				
T.-Narsipur	...	16	...	47	3 99	8 80	−4 81				
Malvalli	...	...	...	97	3 41	7 8	−3 67				
Mandya	*	*	*	*	* *	* *	* *				
Krishnarajpete	1	65	..	86	5 65	8 46	−2 81				
Nagamangala	..	8	1	21	5 90	6 64	−0 74				
District average...	...	..	...	.	... ...	... ..	. ...				
HASSAN.											
Hassan	...	23	1	...	3 29	8 15	−4 86				
Manjarabad (Saklespur)	1	92	1	2	6 67	8 54	−1 87				
Arkalgud	2	9[illegible]	...	84	7 39	7 68	−0 29				
Belur	1	64	.	90	6 62	8 21	−1 59	Rice, 2nd sort.	8·00	8·50	10·41
Channarayapatna	...	45	1	35	5 79	7 64	−1 85				
Arsikere	1	28	1	28	2 79	7 35	−4 56	Ragi	16·00	16·00	14·86
Hole-Narsipur	2	70	..	82	8 11	6 86	+1 25	Kulthi	10·00	10·50	...
Alur	...	23	1	11	2 92	7 18	−4 26	Kadale	8·00	8·50	9·80
District average...	1	42	1	4	5 45	7 70	−2 25				
SHIMOGA.											
Shimoga	...	81	...	93	5 55	6 45	−0 90				
Channagiri	...	12	...	73	1 99	5 45	−3 46	Rice, 2nd sort	7·70	7·50	12·03
Honnali	2	70	1	54	4 77	7 26	−2 49				
Shikarpur	1	70	1	7	2 8	5 75	−3 67	Ragi	13·00	13·00	28·48
Sorab	2	40	..	57	2 95	4 22	−1 28	Kulthi	9·50	9·50	...
Sagar	2	34	...	84	4 91	5 24	−0 [illegible]				
Nagar (Kallurkatte)	..	78	...	66	1 69	4 1	−2 32				
Tirthahalli	2	70	1	2	4 34	5 66	−1 32				
Kumsi	...	74	..	75	2 15	5 85	−3 70				
District average...	1	59	..	90	3 38	5 54	−2 16				
KADUR.											
Chikmagalur	3	31	1	18	6 85	8 90	−2 5				
Kadur	...	97	1	36	2 61	6 49	−3 88	Rice, 2nd sort	7·50	7·00	10·17
Tarikere	1	2	1	14	4 6	7 93	−3 87				
Koppa	...	63	1	74	5 80	7 4	−1 23	Ragi	14·00	14·00	23·90
Mudgere	1	15	1	31	4 83	9 55	−4 72	Kulthi	9·00	9·00	..
Yedahalli	1	66	1	7	4 4	7 38	−3 34	Kadale	8·00	8·00	10·05
Sringeri	1	44	1	74	5 85	7 50	−1 65				
District average	1	45	1	36	4 86	7 82	−2 96				
CHITALDRUG.											
Chitaldrug	2	26	...	85	4 71	4 58	+0 13				
Challakere	..	20	...	94	... 32	4 51	−4 19	Rice, 2nd sort	7·50	7·50	10·50
Hiriyur	2	8	...	39	3 85	4 28	−0 43				
Holalkere	..	50	.	95	1 88	5 39	−3 51	Ragi	14·00	14·00	27·10
Davangere	1	93	..	96	4 59	5 64	−1 25	Kulthi	10·00	10·00	..
Molakalmuru	1	14	...	88	2 42	5 83	−7 45	Kadale	8·00	8·00	10·50
Jagalur	..	90	1	6	2 3	6 19	−4 16	Cholum	12·00	12·00	23·90
Hosdurga	1	59	.	97	3 30	4 84	−1 50				
Harihar	...	39	..	75	6 78	4 83	+1 95				
District average...	1	22	...	86	3 30	5 12	−1 82				
Provincial average...	...	..	...	...	.. ..	... ...	... ..				

Note—Rice (husked)—Oryza Sativa.
Ragi—Eleusine Corocana.
Kulthi—(Horse gram) Dolichos Biflorus.
Cholum—Sorghum Vulgare.
Kadale—(Bengal gram) Ciser Arietinum.

* Report not received.

DISTRICT REPORTS.

8. Markets how supplied.

9. Progress of agricultural operations, state of standing crops, prospects and probable outturn of harvests, serious damage done to crops by insects or other natural calamities.

10. Prospects of season, tracts in which the rainfall has been insufficient, areas affected by scarcity number of people under relief, and state of food stocks.

11. Public health.

12. Remarks as to the condition of agricultural stock, failure of pasturage of fodder, etc.

BANGALORE CIVIL AND MILITARY STATION.

		Normal.	*Current.*	
Prices of food grains—	Rice ...	10 to 11	6½ to 7	seers per rupee.
	Ragi	25 to 30	15 to 16	

Agricultural operation—Ploughing.

Cattle are in good condition. Water and fodder sufficient.

BANGALORE CITY AND TALUKS.

8. Market well supplied.

9. Standing crops are in good condition, except in Closepet where sugar-cane is reported to be drying for want of sufficient water. Ploughing is carried on throughout the district. In Channapatna and Closepet the red soil lands are reported to be still hard to plough. In Dodballapur about three acres of sugar-cane are reported to have been harvested, and Vysakhi paddy in some parts of Hoskote. Haraka is reported to have been sown in some parts of Hoskote. The outturn of harvests is estimated to be between 4 and 8 annas.

10. Prospects of the season hopeful. Though the rainfall gauged in the Hoskote and Dodballapur stations is small, pretty good rains are reported to have fallen in these taluks, and the tanks have received some supply of water. In Kankanhalli three to four months' supply of water is reported to have been received in big tanks and about a month's supply throughout the Channapatna Taluk. Insufficiency of rainfall is complained of only in the Magadi Taluk. More rain is wanted in Channapatna and Closepet.

11. Public health generally good. Fever prevails in some parts of Hoskote and Dodballapur, and small-pox in some parts of Anekal and Devanhalli.

12. Cattle generally healthy, except in Devanhalli and Closepet, where they are reported to be not in a satisfactory condition. Fodder is sufficiently available throughout the district except in Devanhalli and Closepet, where green leaves are used as fodder to a certain extent. Water is available. Two wells are reported to have been sunk in Dodballapur.

KOLAR.

8. Market well supplied. Prices high.

9. Same is being sown in Mulbagal. Maize is being harvested in Kolar and paddy in parts of Sidlaghatta and Bagepalli.

10. Prospects of the season are somewhat hopeful. Food stocks are available in moderate quantities.

11. Public health generally good.

12. The condition of cattle is generally poor. Supply of fodder is considerably diminishing. The recent showers may help the springing up of pasture. Difficulty for water is still felt.

TUMKUR.

8 Market well supplied.

9. Vysakhi paddy in Maddagiri, Sira, Kunigal, Koratagere and Turuvekere; cholum in Sira, and sugar-cane in Gubbi are being harvested. Irrigated ragi in Maddagiri and Pavagada; cholum in Sira, Gubbi and Turuvekere; green gram, paddy and haraka in Gubbi are sown. Sugar-cane crops in Tumkur; paddy and sugar-cane in Maddagiri; paddy, cholum, irrigated ragi and sugar-cane in Sira; irrigated ragi in Pavagada, and paddy and sugar-cane in Kunigal, Koratagere and parts of Turuvekere are in fair condition. In Gubbi, Tiptur and in parts of Turuvekere they are withering. Cocoanut trees in parts of Tiptur are said to be withering. The probable outturn of crops harvested is as follows:—

Maddagiri—Paddy 8 to 12 annas.

Sira—Paddy 4 to 8 annas, cholum 2 to 4 annas.

Kunigal—Paddy 8 annas.

Turuvekere—Paddy 4 to 8 annas.

10. Prospects of the season are not encouraging. Food stocks are available for the present. Supply of water in wells is diminishing all over the district. In Maddagiri and Turuvekere the number of people employed on ordinary expansion of public works is 126 and 105, respectively.

11. Public health generally good, except that small-pox is prevalent in parts of Gubbi and fever and small-pox in parts of Tiptur.

12. Cattle are deteriorating in condition. Foot and mouth disease prevails in parts of Tiptur. In Maddagiri, Chiknayakanhalli, Sira and Tiptur date leaves are used as fodder for cattle. The leaves of avenue trees also are used as fodder wherever it is found necessary. The recent rains have provided some water for men and cattle in parts of the district.

MYSORE.

8. Market well supplied.

9. Standing crops, such as cholum, til, togari, castor and sugar-cane in parts of Chamrajnagar; sugar-cane, cholum, til, black and green grams in parts of Seringapatam; ragi and cholum in parts of Yedatore; cholum, castor, til, ragi, togari and ballar in parts of Gundlupet; cholum, togari, ballar, castor and cotton in parts of Nanjangud; cholum and til in parts of T.-Narsipur; sugar-cane, mulberry, cholum, til and togari in parts of Malvalli, and sugar-cane and black and green grams in parts of Krishnarajpete, are reported to be pretty fair. They are reported to be withering for want of rain in parts of Heggaddevankote, T.-Narsipur and Nagamangala. Black and green grams are being harvested in parts of Seringapatam.

10. Prospects of the season not bad. But standing crops are in urgent need of rain, which is anxiously awaited. Food stocks are sufficient for the present.

11. Public health generally good, but small-pox still prevails in parts of Heggaddevankote.

12. Cattle healthy in all parts, except in parts of Heggaddevankote, where they are reported to be still suffering from foot and mouth disease. Water and fodder generally available. In Kowlandi Hobli of Nanjangud, cattle are fed on date and other leaves for want of fodder.

HASSAN.

8. Market fairly supplied. Prices high.

9. Sowing is going on in all parts. Sugar-cane in Hassan, Belur, Channarayapatna, Hole-Narsipur and Alur, and paddy in Manjarabad are reported to be in fair condition. The outturn of standing crops in Hole-Narsipur is estimated at 8 annas.

10. Prospects of the season hopeful. More rain is wanted in all parts. Food stocks are sufficient for the present.

11. Public health generally good. Small-pox is reported to still exist in parts of Hassan, Manjarabad, Arsikere and Channarayapatna.

12. Cattle generally healthy, but foot and mouth disease exists in parts of Manjarabad and Hole-Narsipur. Water and fodder are generally available except in parts of Arsikere.

SHIMOGA.

8. Market well supplied. Prices high.

9. Kar-paddy has been completely harvested under the Sulekere tank in the Channagiri Taluk, and harvesting is going on in Sagar and Nagar. Agricultural operations are in progress in all parts where rainfall is sufficient. Paddy is being sown in Sorab, Sagar, Nagar and Tirthahalli. Some good has been done to sugar-cane by the recent rains in Sorab, Sagar and Nagar, and the arecanut gardens in Sagar are reviving in some localities. Sugar-cane in Shimoga requires rain.

10. More rain is wanted in all the taluks. Food stocks are somewhat insufficient in Shimoga, Shikarpur, Sorab, Honnali and Kumsi. Rice continues to be imported from the Madras Presidency into the several parts of the district.

11. Public health is generally good. Cholera prevails in parts of Shimoga, Shikarpur Honnali and Sorab, and small-pox in parts of Sagar, Sorab and Kumsi.

12. Supply of fodder is limited in Honnali, Shikarpur and Sorab. Pasture is springing up in parts where there has been rain and in the *malnad*. Scarcity of water has not yet materially diminished.

KADUR.

8. Market fairly well supplied.

9. Ploughing is carried on throughout the district. Ragi, paddy and black gram in Chikmagalur; paddy in Koppa and Yedahalli; paddy and gingelly in parts of Tarikere, and coriander and gingelly in a few villages of Kadur are being sown. Standing sugar-cane crops in parts of Chikmagalur, Yedahalli, Kadur, Tarikere and Koppa, and kar-paddy in parts of Koppa are in fairly good condition. Sugar-cane is being harvested in Kadur.

10. Prospects of the season fair, but more rain is needed. Food stocks are available and sufficient for the present.

11. Public health generally good, except that small-pox prevails in parts of Chikmagalur and Tarikere.

12. Cattle generally healthy. Water and fodder generally available.

CHITALDRUG.

8. Market well supplied.

9. It is reported that the raiyats are busy in preparing lands for sowing in all taluks.

10. Prospects of the season fair. More rain is anxiously looked for throughout the district Food stocks available.

11. Public health good.

12. Cattle healthy. Water and fodder procurable in limited quantities.

BANGALORE,
13th *June* 1906.

P. G. D'SOUZA,
for *Secy. to the Govt. of H. H. the Maharaja of Mysore, Gen. & Rev. Dept.*

Prices Current [Wholesale] of Food Grains, &c., at the Head-Quarters of the several Districts of the Mysore State during the fortnight ending 31st May 1906.

ಸನ್ 1906ನೆ ಇಸವಿ ಮೇ ಮಾಹೆ 31ನೆ ತಾರೀಖಿಗೆ ಆಖೈರಾದ ಪಂಧ್ರವಾಡಾ ಬಾಬತು ಒಟ್ಟು ವ್ಯಾಪಾರದ ದುಕಾನಗಳಲ್ಲಿ ಪುರೋಖ್ತ್ ಆದ ಆಹಾರ ಜಿನಸಿ ವಗೈರೆ ನಿರಖುನಾಮಾ ಡಿಸ್ಟ್ರಿಕ್ಟ್ ಹೆಡ್ ಕ್ವಾರ್ಟರ್‌ಗಳ ಬಾಬತು.

Prices per 10 maunds of 82 2/7 lbs. each ಮಣ 1ಕ್ಕೆ 82 2/7 ಪೌನುಗಳ ಮೇರಿಗೆ 10 ಮಣಕ್ಕೆ ಖರೀದಿ

Grains and Pulses ಧಾನ್ಯ ಮತ್ತು ಕಾಳುಗಳು

District ಡಿಸ್ಟ್ರಿಕ್ಟ	Rice unhusked (paddy) Oryza sativa ಭತ್ತ 2			Rice, best sort ಅವಲ್ ತರಹೆ ಅಕ್ಕಿ 3			Rice, common ಸಾಧಾರಣ ಅಕ್ಕಿ 4			Wheat Triticum sativum ಹೊಟ್ಟೆ ಗೋಧಿ 5			Barley Hordeum vulgare ಜವೆ ಗೋಧಿ 6		
	Present fortnight ಸುಜಕ್ಕರ್ ಪಂಧ್ರವಾಡಾ	Past fortnight ಗುಜಷ್ಟಾ ಪಂಧ್ರವಾಡಾ	Corresponding fortnight of last year ಗುಜಷ್ಟಾ ಸಾಲ್ ಹೊಕಾಬಿಲಾ ಪಂಧ್ರವಾಡಾ	Present fortnight ಸುಜಕ್ಕರ್ ಪಂಧ್ರವಾಡಾ	Past fortnight ಗುಜಷ್ಟಾ ಪಂಧ್ರವಾಡಾ	Corresponding fortnight of last year ಗುಜಷ್ಟಾ ಸಾಲ್ ಹೊಕಾಬಿಲಾ ಪಂಧ್ರವಾಡಾ	Present fortnight ಸುಜಕ್ಕರ್ ಪಂಧ್ರವಾಡಾ	Past fortnight ಗುಜಷ್ಟಾ ಪಂಧ್ರವಾಡಾ	Corresponding fortnight of last year ಗುಜಷ್ಟಾ ಸಾಲ್ ಹೊಕಾಬಿಲಾ ಪಂಧ್ರವಾಡಾ	Present fortnight ಸುಜಕ್ಕರ್ ಪಂಧ್ರವಾಡಾ	Past fortnight ಗುಜಷ್ಟಾ ಪಂಧ್ರವಾಡಾ	Corresponding fortnight of last year ಗುಜಷ್ಟಾ ಸಾಲ್ ಹೊಕಾಬಿಲಾ ಪಂಧ್ರವಾಡಾ	Present fortnight ಸುಜಕ್ಕರ್ ಪಂಧ್ರವಾಡಾ	Past fortnight ಗುಜಷ್ಟಾ ಪಂಧ್ರವಾಡಾ	Corresponding fortnight of last year ಗುಜಷ್ಟಾ ಸಾಲ್ ಹೊಕಾಬಿಲಾ ಪಂಧ್ರವಾಡಾ
	Rs a p	Rs a p	Rs a p	Rs a p	Rs a p	Rs a p	Rs a p	Rs a p	Rs a p	Rs a p	Rs a p	Rs a p	Rs a p	Rs a p	Rs a p
Bangalore	24 11 11	24 11 11	15 10 9	59 10 0	59 10 0	44 11 2	51 1 9	51 1 9	37 10 7	43 12 4	42 7 1	31 13 4	*	*	*
Kolar ...	22 0 0	22 0 0	20 0 0	57 0 0	57 0 0	50 0 0	53 0 0	53 0 0	44 0 0	50 0	50 0 0	40 0 0	50 0 0	50 0 0	40 0 0
Tumkur ...	22 0 0	22 0 0	18 0 0	63 0 0	63 0 0	45 0 0	48 0 0	48 0 0	44 0 0	58 0	58 0 0	39 0 0	58 0 0	58 0 0	39 0 0
Mysore ...	30 4 0	27 3 2	24 3 3	53 0 6	51 3 2	43 14 1	47 8 8	43 14 2	38 9 7	62 11 1	58 12 4	39 2 11	58 12 4	58 12 4	*
Hassan ...	20 9 2	20 9 2	17 2 3	53 7 9	53 7 9	45 11 5	51 6 10	51 6 10	41 2 3	68 9 2	58 12 5	41 2 3	68 9 2	61 11 5	41 2 3
Shimoga ...	21 12 4	21 12 4	16 14 0	65 1 8	55 15 3	49 1 0	55 15 3	49 1 0	35 8 4	55 15 5	55 15 5	35 8 4	*	*	*
Kadur ...	20 0 0	15 0 0	19 0 0	52 0 0	52 0 0	50 0 0	50 0 0	50 0 0	36 0 0	52 0 0	50 0 0	36 0 0	50 0 0	32 0 0	32 0 0
Chitaldrug	25 11 5	25 11 5	17 2 4	58 12 5	58 12 5	45 11 5	51 6 10	51 6 10	41 2 3	51 6 10	51 6 10	34 4 7	51 6 10	51 6 10	34 4 7

* Article not available.

Prices Current [Wholesale] of Food Grains, &c., at the Head-Quarters of the several Districts of the Mysore State during the fortnight ending 31st May 1906—*contd.*

ಸನ 1906 ನೆ ಇಸವಿ ಮೇ ಮಾಹೇ 31 ನೆ ತಾರೀಖಿಗೆ ಆಖೈರಾದ ಪಂಧ್ರಾವಾಡಾ ಬಾಬತು ಒಟ್ಟುವ್ಯಾಪಾರದ ದುಕಾನಗಳಲ್ಲಿ ಪುರೋಖ್ತ ಆದ ಆಹಾರಜಿನಸು ಪಗ್ಸೆರೆ ನಿರಖುನಾಮಾ-ಡಿಸ್ಟ್ರಿಕ್ಟ್ ಹೆಡ್‌ಕ್ವಾರ್ಟರ್‌ಗಳ ಬಾಬತು-ಸಕೇಪ.

Prices per 10 maunds of $82\frac{2}{7}$ lbs. each ಮಣ 1ಕ್ಕೆ $82\frac{2}{7}$ ಪೌನುಗಳ ಮೇರಿಗೆ 10 ಮಣಕ್ಕೆ ಖರೀದಿ

Grains and Pulses ಧಾನ್ಯ ಮತ್ತು ಕಾಳುಗಳು

District ಡಿಸ್ಟ್ರಿಕ್ಟ	Cholam or javar Sorghum vulgare ಜೋಳ 7			Kambu or Bajara Pennisetum typhoideum ಸಜ್ಜೆ 8			Ragi Eleusine coracana ರಾಗಿ 9			Maize Zeamays ಮುಸುಕಿನ ಜೋಳ 10			Bengal gram Cicer arietinum ಕಡಲೆ 11		
	Present fortnight ಸುಜಕ್ಕರೆ ಪಂಧ್ರಾವಾಡಾ	Past fortnight ಗುಜಷ್ಟಾ ಪಂಧ್ರಾವಾಡಾ	Corresponding fortnight of last year ಗುಜಷ್ಟಾ ಸಾಲ್ ಪೊಕಾಬಿಲಿ ಪಂಧ್ರಾವಾಡಾ	Present fortnight ಸುಜಕ್ಕರೆ ಪಂಧ್ರಾವಾಡಾ	Past fortnight ಗುಜಷ್ಟಾ ಪಂಧ್ರಾವಾಡಾ	Corresponding fortnight of last year ಗುಜಷ್ಟಾ ಸಾಲ್ ಪೊಕಾಬಿಲಿ ಪಂಧ್ರಾವಾಡಾ	Present fortnight ಸುಜಕ್ಕರೆ ಪಂಧ್ರಾವಾಡಾ	Past fortnight ಗುಜಷ್ಟಾ ಪಂಧ್ರಾವಾಡಾ	Corresponding fortnight of last year ಗುಜಷ್ಟಾ ಸಾಲ್ ಪೊಕಾಬಿಲಿ ಪಂಧ್ರಾವಾಡಾ	Present fortnight ಸುಜಕ್ಕರೆ ಪಂಧ್ರಾವಾಡಾ	Past fortnight ಗುಜಷ್ಟಾ ಪಂಧ್ರಾವಾಡಾ	Corresponding fortnight of last year ಗುಜಷ್ಟಾ ಸಾಲ್ ಪೊಕಾಬಿಲಿ ಪಂಧ್ರಾವಾಡಾ	Present fortnight ಸುಜಕ್ಕರೆ ಪಂಧ್ರಾವಾಡಾ	Past fortnight ಗುಜಷ್ಟಾ ಪಂಧ್ರಾವಾಡಾ	Corresponding fortnight of last year ಗುಜಷ್ಟಾ ಸಾಲ್ ಪೊಕಾಬಿಲಿ ಪಂಧ್ರಾವಾಡಾ
	Rs a p	Rs a p	Rs a p	Rs a p	Rs a p	Rs a p	Rs a p	Rs a p	Rs a p	Rs a p	Rs a p	Rs a p	Rs a p	Rs a p	Rs a p
Bangalore	*	*	*	*	*	*	24 15 0	23 8 2	20 9 1	3 maizes for 4 pies.	3 maizes for 4 pies.	3 maizes for 4 pies.	46 1 7	46 1 7	32 10 5
Kolar ...	*	*	*	*	*	*	26 0 0	26 0 0	20 0 0	*	*	*	44 0 0	44 0 0	40 0 0
Tumkur ...	29 0 0	29 0 0	18 0 0	*	*	*	22 0 0	22 0 0	18 0 0	*	*	*	48 0 0	48 0 0	39 0 0
Mysore ..	29 4 1	27 14 2	18 4 6	*	*	*	29 6 3	25 7 6	22 10 1	*	*	*	43 1 7	41 2 3	35 4 3
Hassan ...	*	*	*	*	*	*	25 11 5	25 11 5	20 9 2	*	*	*	53 7 9	51 6 10	41 2 3
Shimoga ...	32 8 0	32 8 0	17 12 2	*	*	*	32 8 0	27 15 6	17 12 2	*	*	*	49 1 0	49 1 0	34 1 0
Kadur ...	22 0 0	22 0 0	17 0 0	*	*	*	28 0 0	25 0 0	15 0 0	*	*	*	50 0 0	50 0 0	32 0 0
Chitaldrug	31 10 4	31 10 4	17 2 4	25 11 5	25 11 5	17 2 4	29 6 2	29 6 2	17 2 4	*	*	*	51 6 10	51 6 10	34 4 7

* Article not available.

Prices Current [Wholesale] of Food Grains, &c., at the Head-Quarters of the several Districts of the Mysore State during the fortnight ending 31st May 1906- *-contd.*

ಸನ್ 1906ನೆ ಇಸವಿ ಮೇ ಮಾಹೇ 31ನೆ ತಾರೀಖಿಗೆ ಆಖೈರಾದ ಪಂಧ್ರಾವಾಡಾ ಬಾಬತು ಒಟ್ಟು ವ್ಯಾಪಾರದ ದುಕಾನ್‌ಗಳಲ್ಲಿ ಪುರೋಖ್ತ್ ಆದ ಆಹಾರಜಿನಸು ವಗೈರೆ ನಿರಖ್‌ನಾಮಾ-ಡಿಸ್ಟ್ರಿಕ್ಟ್ ಹೆಡ್ ಕ್ವಾರ್ಟರ್‌ಗಳ ಬಾಬತು-ಸಶೇಷ.

Prices per 10 maunds of 28⅔ lbs. each ಮಣ 1ಕ್ಕೆ 28⅔ ಪೌನುಗಳ ಮೇರಿಗೆ 10 ಮಣಕ್ಕೆ ಖರೀದಿ

District ಡಿಸ್ಟ್ರಿಕ್ಟ	Grains and Pulses ಧಾನ್ಯ ಮತ್ತು ಕಾಳುಗಳು																								Ghee (Clarified butter) ತುಪ್ಪ		
	Horse gram Dolichos biflorus ಹುರಳಿ						Arhar Cajanus indicus ತೊಗರಿ						Arhar Dal ತೊಗರಿ ಬ್ಯಾಳೆ						Kangani Setaria italica ನವಣೆ								
	12						13						14						15						16		
	Present fortnight ಪಂಜಕ್ಕೂರ್ ಪಂಧ್ರಾವಾಡಾ			Past fortnight ಗುಜಷ್ತಾ ಪಂಧ್ರಾವಾಡಾ			Corresponding fortnight of last year ಗುಜಷ್ತಾ ಸಾಲ್ ಸೊಕಾಬಿಲಾ ಪಂಧ್ರಾವಾಡಾ			Present fortnight ಪಂಜಕ್ಕೂರ್ ಪಂಧ್ರಾವಾಡಾ			Past fortnight ಗುಜಷ್ತಾ ಪಂಧ್ರಾವಾಡಾ			Corresponding fortnight of last year ಗುಜಷ್ತಾ ಸಾಲ್ ಸೊಕಾಬಿಲಾ ಪಂಧ್ರಾವಾಡಾ			Present fortnight ಪಂಜಕ್ಕೂರ್ ಪಂಧ್ರಾವಾಡಾ			Past fortnight ಗುಜಷ್ತಾ ಪಂಧ್ರಾವಾಡಾ			Corresponding fortnight of last year ಗುಜಷ್ತಾ ಸಾಲ್ ಸೊಕಾಬಿಲಾ ಪಂಧ್ರಾವಾಡಾ			Present fortnight ಪಂಜಕ್ಕೂರ್ ಪಂಧ್ರಾವಾಡಾ			Past fortnight ಗುಜಷ್ತಾ ಪಂಧ್ರಾವಾಡಾ			Corresponding fortnight of last year ಗುಜಷ್ತಾ ಸಾಲ್ ಸೊಕಾಬಿಲಾ ಪಂಧ್ರಾವಾಡಾ		
	Rs	a	p	Rs	a	p	Rs	a	p	Rs	a	p	Rs	a	p	Rs	a	p	Rs	a	p	Rs	a	p	Rs	a	p	Rs	a	p	Rs	a	p	Rs	a	p
Bangalore	29	11	9	29	14	9	26	5	4	29	4	1	28	2	1	30	7	7	48	6	5	47	0	0	45	11	5		*			*			*		† 531	6	10	488	9	1	342	13	8
Kolar ..	29	0	0	29	0	0	26	0	0		*			*			*		44	0	0	44	0	0	50	0	0		*			*			*		400	0	0	400	0	0	400	0	0
Tumkur ...	28	0	0	28	0	0	29	0	0	30	0	0	30	0	0	29	0	0	48	0	0	0	0	0	48	0	0		*			*			*		291	0	0	291	0	0	289	0	0
Mysore ..	29	6	3	25	9	9	26	13	11	45	4	1	43	14	2	31	5	6	57	9	7	54	13	8	56	3	8		*			*			*		486	10	2	516	3	0	356	0	0
Hassan ...	41	2	3	41	2	3	34	4	7	37	6	5	37	6	5	37	6	5	51	6	10	51	6	10	51	6	10		*			*			*		514	4	7	548	9	1	377	2	3
Shimoga ...	43	12	0	35	8	4	33	5	4	32	8	0	32	8	0		*		49	1	0	49	1	0	45	15	0		*		32	8	0		*		415	1	8	415	1	8	410	15	10
Kadur ...	42	0	0	32	0	0	30	0	0		*		30		00	30	0	0	50	0	0	42	0	0	50	0	0		*			*			*		363	0	0	363	0	0	363	0	0
Chitaldrug	37	6	5	37	6	5	29	6	2	29	6	2	29	6	2	29	6	2	51	6	10	51	6	10	45	11	5	20	9	2	20	9	2	13	11	5	411	6	10	411	6	10	411	6	10

* Article not available.

† The higher price of ghee is accounted for by the diminution of supply consequent upon the deficiency of production caused by the failure of timely rain.

Prices Current [Wholesale] of Food Grains, &c., at the Head-Quarters of the several Districts of the Mysore State during the fortnight ending 31st May 1906—*contd.*

ಸನ 1906ನೆ ಇಸವಿ ಮೇ ಮಾಹೇ 31ನೆ ತಾರೀಖಿಗೆ ಆಖೈರಾದ ಪಂಧ್ರವಾಡಾ ಬಾಬತು ಒಟ್ಟುವ್ಯಾಪಾರದ ದುಕಾನಗಳಲ್ಲಿ ಪುರೋಖ್ತ ಆದ ಆಹಾರ ಜಿನಸಿ ವಗೈರೆ ನಿರಖುನಾಮಾ ಡಿಸ್ಟ್ರಿಕ್ಟ ಹೆಡ್‌ಕ್ವಾರ್ಟರ್‌ಗಳ ಬಾಬತು.ಸಂಕ್ಷೇಪ.

Prices per 10 maunds of 82⅔ lbs. each ಮಣ ,ಕ್ಕೆ 82⅔ ಪೌನುಗಳ ಮೇರಿಗೆ 10 ಮಣಕ್ಕೆ ಖರೀದಿ

District ಡಿಸ್ಟ್ರಿಕ್ಟ	Wheat Flour ಗೋಧಿ ಹಿಟ್ಟು 17			Sea Salt ಕಲ್ಲುಪ್ಪು 18			Oil Seeds: Gingelly Sesamum indicum ಎಳ್ಳು 19			Sugar: Goor or jaggery ಬೆಲ್ಲ 20			Fibres: Cotton cleaned Gossypium ಅರಳೆ 21		
	Present fortnight ಸುಜಕಕೊರ್ ಪಂಧ್ರವಾಡಾ	Past fortnight ಗುಜಷ್ಟಾ ಪಂಧ್ರವಾಡಾ	Corresponding fortnight of last year ಗುಜಷ್ಟಾ ಸಾಲ್ ಜೊಕಾಲಿಲಾ ಪಂಧ್ರವಾಡಾ	Present fortnight ಸುಜಕಕೊರ್ ಪಂಧ್ರವಾಡಾ	Past fortnight ಗುಜಷ್ಟಾ ಪಂಧ್ರವಾಡಾ	Corresponding fortnight of last year ಗುಜಷ್ಟಾ ಸಾಲ್ ಜೊಕಾಲಿಲಾ ಪಂಧ್ರವಾಡಾ	Present fortnight ಸುಜಕಕೊರ್ ಪಂಧ್ರವಾಡಾ	Past fortnight ಗುಜಷ್ಟಾ ಪಂಧ್ರವಾಡಾ	Corresponding fortnight of last year ಗುಜಷ್ಟಾ ಸಾಲ್ ಜೊಕಾಲಿಲಾ ಪಂಧ್ರವಾಡಾ	Present fortnight ಸುಜಕಕೊರ್ ಪಂಧ್ರವಾಡಾ	Past fortnight ಗುಜಷ್ಟಾ ಪಂಧ್ರವಾಡಾ	Corresponding fortnight of last year ಗುಜಷ್ಟಾ ಸಾಲ್ ಜೊಕಾಲಿಲಾ ಪಂಧ್ರವಾಡಾ	Present fortnight ಸುಜಕಕೊರ್ ಪಂಧ್ರವಾಡಾ	Past fortnight ಗುಜಷ್ಟಾ ಪಂಧ್ರವಾಡಾ	Corresponding fortnight of last year ಗುಜಷ್ಟಾ ಸಾಲ್ ಜೊಕಾಲಿಲಾ ಪಂಧ್ರವಾಡಾ
	Rs a p	Rs a p	Rs a p	Rs a p	Rs a p	Rs a p	Rs a p	Rs a p	Rs a p	Rs a p	Rs a p	Rs a p	Rs a p	Rs a p	Rs a p
Bangalore..	66 12 3	64 8 7	48 6 5	23 13 7	25 8 10	29 13 6	72 5 5	72 5 5	58 12 5	49 4 7	49 4 7	64 4 7	205 11 5	205 11 5	205 11 5
Kolar ..	50 0 0	50 0 0	50 0 0	26 0 0	26 0 0	33 0 0	50 0 0	50 0 0	50 0 0	44 0 0	44 0 0	44 0 0	*	*	*
Tumkur ...	*	*	*	28 0 0	28 0 0	33 0 0	53 0 0	53 0 0	*	44 0 0	44 0 0	*	*	*	*
Mysore ...	57 9 6	57 9 6	48 0 0	26 7 2	25 7 6	27 6 1	75 3 8	70 8 5	65 13 3	52 9 1	52 9 1	79 15 11	188 9 11	188 9 11	188 9 1
Hassan ...	82 4 7	58 12 6	68 9 2	41 2 3	29 6 3	34 4 7	68 9 2	68 9 2	51 6 10	68 9 2	68 9 2	85 11 5	171 6 10	171 6 10	171 6 10
Shimoga ...	71 7 4	71 7 4	49 1 0	24 6 10	24 6 10	21 6 10	55 15 5	55 15 5	49 1 0	58 2 0	58 2 0	85 5 10	226 11 6	226 11 6	193 6 2
Kadur ...	64 0 0	64 0 0	64 0 0	27 0 0	27 0 0	31 0 0	61 0 0	50 0 0	50 0 0	72 0 0	72 0 0	72 0 0	303 0 0	303 0 0	303 0 0
Chitaldrug.	51 6 10	51 6 10	45 11 5	41 2 3	41 2 3	41 2 3	51 6 10	51 6 10	34 4 7	137 2 3	137 2 3	51 6 10	137 2 3	137 2 3	137 2 3

* Article not available.

Prices Current [Wholesale] of Food Grains, &c., at the Head-Quarters of the several Districts of the Mysore State during the fortnight ending 31st May 1906—*contd.*

ಸನ್ 1906ನೆ ಇಸವಿ ಮೇ ಮಾಹೆ 31ನೆ ತಾರೀಖಿಗೆ ಆಖೈರಾದ ಪಂಧ್ರಾವಾಡಾ ಬಾಬತು ಒಟ್ಟುವ್ಯಾಪಾರದ ದುಕಾನ್‌ಗಳಲ್ಲಿ ಪುರೋಖ್ತ್ ಆದ ಆಹಾರ ಧಾನ್ಯ ವಗೈರೆ ನಿರಖುನಾಮಾ-ಡಿಸ್ಟ್ರಿಕ್ಟ್‌ಹೆಡ್ ಕ್ವಾರ್ಟರ್‌ಗಳ ಬಾಬತು-ಸಂಕ್ಷೇಪ.

Prices per 10 maunds of 82⅔ lbs. each ಮಣ 1ಕ್ಕೆ 82⅔ ಪೌನುಗಳ ಮೇರಿಗೆ ಮಣ 10ಕ್ಕೆ ಖರೀದಿ

District ಡಿಸ್ಟ್ರಿಕ್ಟ	Drugs and Narcotics — Tobacco leaf Nicotiana tabacum and N. rustica ಹೊಗೆಸೊಪ್ಪು (22)			Fodder — Grass ಹಸೀ ಹುಲ್ಲು (23)			Straw ಒಣ ಹುಲ್ಲು (24)			Javar stalks ಜೋಳದ ಕಡ್ಡಿ (25)		
	Present fortnight ಪ್ರಸಕ್ತದ ಪಂಧ್ರಾವಾಡಾ	Past fortnight ಗುಜಷ್ತಾ ಪಂಧ್ರಾವಾಡಾ	Corresponding fortnight of last year ಗುಜಷ್ತಾ ಸಾಲ್ ಪೊಕಾಬಿಲಾ ಪಂಧ್ರಾವಾಡಾ	Present fortnight ಪ್ರಸಕ್ತದ ಪಂಧ್ರಾವಾಡಾ	Past fortnight ಗುಜಷ್ತಾ ಪಂಧ್ರಾವಾಡಾ	Corresponding fortnight of last year ಗುಜಷ್ತಾ ಸಾಲ್ ಪೊಕಾಬಿಲಾ ಪಂಧ್ರಾವಾಡಾ	Present fortnight ಪ್ರಸಕ್ತದ ಪಂಧ್ರಾವಾಡಾ	Past fortnight ಗುಜಷ್ತಾ ಪಂಧ್ರಾವಾಡಾ	Corresponding fortnight of last year ಗುಜಷ್ತಾ ಸಾಲ್ ಪೊಕಾಬಿಲಾ ಪಂಧ್ರಾವಾಡಾ	Present fortnight ಪ್ರಸಕ್ತದ ಪಂಧ್ರಾವಾಡಾ	Past fortnight ಗುಜಷ್ತಾ ಪಂಧ್ರಾವಾಡಾ	Corresponding fortnight of last year ಗುಜಷ್ತಾ ಸಾಲ್ ಪೊಕಾಬಿಲಾ ಪಂಧ್ರಾವಾಡಾ
	Rs a p	Rs a p	Rs a p	Rs a p	Rs a p	Rs a p	Rs a p	Rs a p	Rs a p	Rs a p	Rs a p	Rs a p
Bangalore..	291 6 10	291 6 10	308 9 2	9 2 3	9 2 3	7 9 10	8 9 1	8 9 1	6 13 9	*	*	*
Kolar ...	No wholesale transaction.			5 0 0	5 0 0	5 0 0	8 0 0	8 0 0	8 0 0	*	*	*
Tumkur ...	*	*	*	*	*	*	*	*	*	*	*	*
Mysore ...	280 3 3	280 3 3	280 8 3	11 6 4	11 6 4	11 6 10	6 8 2	6 8 2	6 8 2	6 8 0	6 8 0	7 8 0
Hassan ...	171 6 10	171 6 10	171 6 10	1 11 5	1 11 5	1 11 5	3 6 10	3 6 10	3 6 10	*	*	*
Shimoga ...	173 0 4	173 0 4	173 0 4	*	*	*	3 10 4	3 10 4	1 13 2	*	*	*
Kadur ..	303 0 0	303 0 0	303 0 0	*	*	*	22 0 0	22 0 0	22 0 0	*	*	*
Chitaldrug	137 2 3	137 2 3	137 2 3	*	*	*	13 11 5	13 11 5	6 13 8	13 11 5	13 11 5	10 4 7

* Article not available.

Prices Current [Wholesale] of Food Grains, &c., at the Head-Quarters of the several Districts of the Mysore State during the fortnight ending 31st May 1906—*contd.*

ಸನ 1906ನೆ ಇಸವಿ ಮೇ ತಿಂಗಳ 31ನೆ ತಾರೀಖಿಗೆ ಅನ್ವಯವಾದ ಸಂಪ್ರದಾಯದ ಬಾಬು ಮೈಸೂರಿನ ಹಲವು ಜಿಲ್ಲೆಗಳಲ್ಲಿ ಪ್ರಧಾನವಾದ ಆಹಾರದಿನಸು ಮತ್ತೆ ನಿರವಯವಾದ ಪಿನ್ಸ್ ಕ್ಲರ್ಕ್‌ಗಳ ಬಾಬುತ್ತಾಯಿತು.

Prices per 10 maunds of 82⅔ lbs each ಪೂರ 1ಕ್ಕೆ 82⅔ ಪೌಂಡುಗಳ ಮೇರೆಗೆ 10 ಮೌಂಡ್ಸ್ ಬೆಲೆ

District ಜಿಲ್ಲೆ	Garden produce																	
	Turmeric Curcuma longa ಅರಶಿನ 26			Coffee Coffea arabica ಕಾಫಿ 27			Cardamom Amomum aromaticum ಯಾಲಕ್ಕಿ 28			Supari Areca catechu ಅಡಿಕೆ 29								
	Present fortnight ಪ್ರಸ್ತುತದ ಪಂಥ್ರಾಣಿ	Past fortnight ಗತಿಸಿದ ಪಂಥ್ರಾಣಿ	Corresponding fortnight of last year ಗತಿಸಿದ ಸಾಲಿನ ಪಂಥ್ರಾಣಿ	Present fortnight ಪ್ರಸ್ತುತದ ಪಂಥ್ರಾಣಿ	Past fortnight ಗತಿಸಿದ ಪಂಥ್ರಾಣಿ	Corresponding fortnight of last year ಗತಿಸಿದ ಸಾಲಿನ ಪಂಥ್ರಾಣಿ	Present fortnight ಪ್ರಸ್ತುತದ ಪಂಥ್ರಾಣಿ	Past fortnight ಗತಿಸಿದ ಪಂಥ್ರಾಣಿ	Corresponding fortnight of last year ಗತಿಸಿದ ಸಾಲಿನ ಪಂಥ್ರಾಣಿ	Present fortnight ಪ್ರಸ್ತುತದ ಪಂಥ್ರಾಣಿ	Past fortnight ಗತಿಸಿದ ಪಂಥ್ರಾಣಿ	Corresponding fortnight of last year ಗತಿಸಿದ ಸಾಲಿನ ಪಂಥ್ರಾಣಿ						
	Rs a p	Rs a p	Rs a p	Rs a p	Rs a p	Rs a p	Rs a p	Rs a p	Rs a p	Rs a p	Rs a p	Rs a p						
Bangalore	111 6 10	111 10	64 4 7	303 9 2	317 2 3	342 13 8	†1,711 6 10	1,371 6 10	1,713 6 10	317 2 3	317 2 3	282 13 9						
Kolar ..	100 0 0	100 0 0	100 0 0	400 0 0	400 0 0	400 0 0	1,600 0 0	1,600 0 0	1,600 0 0	400 0 0	400 0 0	400 0 0						
Tumkur ..	*	*	*	*	*	*	*	*	*	*	*	*						
Mysore ...	109 1 5	109 1 5	81 13 1	285 14 0	285 14 0	312 5 6	1,690 8 4	1,690 8 4	1,690 8 4	303 9 2	303 9 2	342 13 8						
Hassan ...	102 13 9	102 13 9	63 9 2	274 4 7	303 9 2	274 4 7	1,028 9 1	1,028 9 1	857 2 3	171 6 10	205 11 5	171 6 10						
Shimoga ...	136 15 8	136 15 8	85 5 10	250 12 6	250 12 6	273 15 4	1,095 15 10	1,095 15 10	657 8 0	300 4 0	273 15 4	346 4 0						
Kadur ...	151 0 0	151 0 0	151 0 0	363 0 0	363 0 0	363 0 0	1,600 0 0	2,100 0 0	2,424 0 0	363 0 0	363 0 0	[illegible]0						
Chitaldrug	137 2 3	137 2 3	137 2 3	411 6 10	411 6 10	411 6 10	3,291 6 10	3,291 6 10	3,291 6 10	205 11 5	205 11 5	205 11 5						

* Article not available.

† The high price of cardamom is accounted for by the diminution of supply consequent upon the deficiency of production caused by the failure of timely rain.

Prices Current [Wholesale] of Food Grains, &c., at the Head-Quarters of the several Districts of the Mysore State during the fortnight ending 31st May 1906—*concld.*

ಸನ್ 1906ನೆ ಇಸವಿ ಮೇ ಮಾಹೆ 31ನೆ ತಾರೀಖಿಗೆ ಆಯ್ದಿರುವ ಪಂಥ್ರಾಣಾದಾ ಬಾಬತು ಒಟ್ಟು ವ್ಯಾಪಾರದ ದುಕಾನಗಳಲ್ಲಿ ಪುರೋಖ್ತ್ ಆದ ಆಹಾರಜಿನಸು ವಗೈರೆ ನಿರಖುನಾಮಾ-ಡಿಸ್ಟ್ರಿಕ್ಟ್‌ಹೆಡ್ ಕ್ವಾರ್ಟರ್‌ಗಳ ಬಾಬತುನಮಾ.

District ಡಿಸ್ಟ್ರಿಕ್ಟ್	Garden produce — Dry cocoanut cocos nucifera ಬೊಂಬರಿ (30)			Hides (cattle) ದನವಿನ ಚರ್ಮ (31)			Plough bullocks (pair) ಉಳೋಎತ್ತುಗಳು ಜೊತೆ 1ಕ್ಕೆ (32)			Sheep (score) ಕುರಿಗಳು 20ಕ್ಕೆ (33)		
	Present fortnight ಸುಜಪಕ್ಕರ್ ಪಂಥ್ರಾಣಾ	Past fortnight ಗುಜಷ್ಟಾ ಪಂಥ್ರಾಣಾ	Corresponding fortnight of last year ಗುಜಷ್ಟಾ ಸಾಲ್ ಸೊಕಾಬಿಲಾ ಪಂಥ್ರಾಣಾ	Present fortnight ಸುಜಪಕ್ಕರ್ ಪಂಥ್ರಾಣಾ	Past fortnight ಗುಜಷ್ಟಾ ಪಂಥ್ರಾಣಾ	Corresponding fortnight of last year ಗುಜಷ್ಟಾ ಸಾಲ್ ಸೊಕಾಬಿಲಾ ಪಂಥ್ರಾಣಾ	Present fortnight ಸುಜಪಕ್ಕರ್ ಪಂಥ್ರಾಣಾ	Past fortnight ಗುಜಷ್ಟಾ ಪಂಥ್ರಾಣಾ	Corresponding fortnight of last year ಗುಜಷ್ಟಾ ಸಾಲ್ ಸೊಕಾಬಿಲಾ ಪಂಥ್ರಾಣಾ	Present fortnight ಸುಜಪಕ್ಕರ್ ಪಂಥ್ರಾಣಾ	Past fortnight ಗುಜಷ್ಟಾ ಪಂಥ್ರಾಣಾ	Corresponding fortnight of last year ಗುಜಷ್ಟಾ ಸಾಲ್ ಸೊಕಾಬಿಲಾ ಪಂಥ್ರಾಣಾ
	Rs a p	Rs a p	Rs a p	Rs a p	Rs a p	Rs a p	Rs a p	Rs a p	Rs a p	Rs a p	Rs a p	Rs a p
Bangalore ..	154 4 7	154 4 7	120 0 0	4 7 2 3	437 2 3	437 2 3	120 to 150	120 to 150	120 to 150	160 0 0	160 0 0	160 0 0
Kolar ...	133 0 0	133 0 0	133 0 0	190 0 0	190 0 0	190 0 0	100 0 0	100 0 0	100 0 0	100 0 0	100 0 0	100 0 0
Tumkur ..	*	*	*	*	*	*	25 0 0	25 0 0	*	80 0 0	80 0 0	*
Mysore ...	103 9 1	103 9 1	126 10 8	514 4 6	514 4 6	514 4 6	70 0 0	70 0 0	70 0 0	100 0 0	100 0 0	100 0 0
Hassan ...	164 9 2	164 9 2	164 9 2	164 9 2	164 9 2	164 9 2	30 0 0	30 0 0	30 0 0	100 0 0	80 0 0	100 0 0
Shimoga ...	136 15 8	136 15 8	136 15 8	2 3 15 4	273 15 4	273 15 4	60 0 0	60 0 0	50 0 0	60 0 0	60 0 0	60 0 0
Kadur ...	193 0 0	193 0 0	193 0 0	2 0 0 per hide.	2 0 0 per hide.	2 0 0 per hide.	40 0 0	40 0 0	40 0 0	60 0 0	60 0 0	60 0 0
Chitaldru	137 2 3	137 2 3	137 2 3	137 2 3	137 2 3	137 2 3	from 20 to 80 Rs.	from 20 to 80 Rs.	from 20 to 80 Rs	from 80 to 120 Rs. Per	from 80 to 120 Rs. score	from 80 to 120 Rs

*Article not available.

760

Prices Current [Retail] of Food Grains, &c., at the Head-Quarters of the several Districts of the Mysore State during the fortnight ending 31st May 1906.

ಸನ್ 1906ನೆ ಇಸವಿ ಮೇ ಮಾಹೆ 31ನೆ ತಾರೀಖಿಗೆ ಆಖೈರಾದ ಪಂಧ್ರವಾಡಾ ಬಾಬತು ಒಟ್ಟುವ್ಯಾಪಾರದ ಚಿಲ್ಲರೆ ಅಂಗಡಿಗಳಲ್ಲಿ ಪುರೋಖ್ತ್ ಆದ ಆಹಾರ ಜಿನಸಿ ವಗೈರೆನಿರಖುನಾಮಾಡಿಸ್ಟ್ರಿಕ್ಟ್ ಹೆಡ್ ಕ್ವಾರ್ಟರ್‌ಗಳ ಬಾಬತು.

Quantity per rupee by the standard seer of 80 tolas, *vide* Government of India No. 1—21, dated 10th February 1874

ಸನ್ 1874ನೆ ಇಸವಿ ಫೆಬ್ರುವರಿ 10ನೆ ಮರಕೂಂ 1—21ನೆ ನಂಬರು ಇಂಡಿಯಾ ಗವರ್ನ್‌ಮೆಂಟ್ ಆರ್‌ಡರ್ ಅನುಸರಿಸಿ ರೂಪಾಯಿ ಒಕ್ಕೆ ೮೦ ತೊಲಾ ತೂಕದ ಬಾಬತು ಶೇರುಗಳು

District ಡಿಸ್ಟ್ರಿಕ್ಟ್	Grains and Pulses ಧಾನ್ಯ ಮತ್ತು ಕಾಳುಗಳು																													
	Rice unhusked (paddy) Oryza sativa ಭತ್ತ						Rice, best sort ಅವಲ್ ತರಹೆ ಅಕ್ಕಿ						Rice, common ಸಾಧಾರಣ ಅಕ್ಕಿ						Wheat Triticum sativum ಹೊಟ್ಟೆ ಗೋಧಿ						Barley Hordeum vulgare ಜವೆ ಗೋಧಿ					
	2						3						4						5						6					
	Present fortnight ಸಜಕ್ಕೊರ್ ಪಂಧ್ರವಾಡಾ		Past fortnight ಗುಜಷ್ಟಾ ಪಂಧ್ರವಾಡಾ		Corresponding fortnight of last year ಗುಜಷ್ಟಾ ಸಾಲ್ ಜೊಕಾಬಿಲಾ ಪಂಧ್ರವಾಡಾ		Present fortnight ಸಜಕ್ಕೊರ್ ಪಂಧ್ರವಾಡಾ		Past fortnight ಗುಜಷ್ಟಾ ಪಂಧ್ರವಾಡಾ		Corresponding fortnight of last year ಗುಜಷ್ಟಾ ಸಾಲ್ ಜೊಕಾಬಿಲಾ ಪಂಧ್ರವಾಡಾ		Present fortnight ಸಜಕ್ಕೊರ್ ಪಂಧ್ರವಾಡಾ		Past fortnight ಗುಜಷ್ಟಾ ಪಂಧ್ರವಾಡಾ		Corresponding fortnight of last year ಗುಜಷ್ಟಾ ಸಾಲ್ ಜೊಕಾಬಿಲಾ ಪಂಧ್ರವಾಡಾ		Present fortnight ಸಜಕ್ಕೊರ್ ಪಂಧ್ರವಾಡಾ		Past fortnight ಗುಜಷ್ಟಾ ಪಂಧ್ರವಾಡಾ		Corresponding fortnight of last year ಗುಜಷ್ಟಾ ಸಾಲ್ ಜೊಕಾಬಿಲಾ ಪಂಧ್ರವಾಡಾ		Present fortnight ಸಜಕ್ಕೊರ್ ಪಂಧ್ರವಾಡಾ		Past fortnight ಗುಜಷ್ಟಾ ಪಂಧ್ರವಾಡಾ		Corresponding fortnight of last year ಗುಜಷ್ಟಾ ಸಾಲ್ ಜೊಕಾಬಿಲಾ ಪಂಧ್ರವಾಡಾ	
	Srs	ch	Srs	ch	Srs	ch	Srs	ch	Srs	ch	Srs	ch	Srs	ch	Srs	ch	Srs	ch	Srs	ch	Srs	ch	Srs	ch	Srs	ch	Srs	ch	Srs	ch
Bangalore ...	15	12	15	12	25	6	6	9	6	9	8	10	7	7	7	7	10	6	8	13	9	1	12	5	*	*	*	*	*	*
Kolar ...	18	0	18	0	20	0	7	0	7	0	8	0	7	8	7	8	9	0	8	0	8	0	10	0	8	0	8	0	10	0
Tumkur ...	18	0	18	0	21	0	6	8	6	8	8	8	8	0	8	0	9	0	7	0	7	0	10	0	7	0	7	0	10	0
Mysore ...	13	9	16	12	17	0	7	5	7	0	9	2	8	7	8	0	10	11	6	4	6	4	10	8	6	13	6	4	*	*
Hassan ...	20	0	20	0	24	0	7	8	7	8	9	0	8	0	8	0	10	0	6	0	7	7	10	0	6	0	6	6	10	0
Shimoga ..	18	14	18	14	25	3	6	5	7	6	8	6	7	6	8	6	11	9	7	6	7	6	11	9	*	*	*	*	*	*
Kadur ...	20	0	24	0	23	0	7	0	7	0	8	0	8	0	8	0	10	0	7	0	8	0	10	0	8	0	11	0	11	0
Chitaldrug ...	16	0	16	0	24	0	7	0	7	0	9	0	8	0	8	0	10	0	8	0	8	0	12	0	8	0	8	0	12	0

* Article not available.

Prices Current [Retail] of Food Grains, &c., at the Head-Quarters of the several Districts of the Mysore State during the fortnight ending 31st May 1906—*contd.*

ಸನ್ 1906ನೆ ಇಸವಿ ಮೇ ಮಾಹೇ 31ನೆ ತಾರೀಖಿಗೆ ಆಯ್ಕೆರಾದ ಪಂಧ್ರಾವಾಡಾ ಬಾಬತು ಚಿಲ್ಲರೆ ಅಂಗಡಿಗಳಲ್ಲಿ ಸ್ವರೋಬ್ಬ ಆದ ಆಹಾರ ಜಿನಸಿ ವಗೈರೆ ಬರಖುನಾಮಾ —ಡಿಸ್ಟ್ರಿಕ್ಟ್ ಹೆಡ್ ಕ್ವಾರ್ಟರ್‌ಗಳ ಬಾಬತು-ಸಶೇಷ.

Quantity per rupee by the standard seer of 80 tolas, &c.—*continued.* ರೂ. 1ಕ್ಕೆ 80 ತೊಲಾ ತೂಕದ ಬಾಬತು ಶೇರುಗಳು—ಸಶೇಷ.

Grains and Pulses ಧಾನ್ಯ ಮತ್ತು ಕಾಳುಗಳು

District ಡಿಸ್ಟ್ರಿಕ್ಟ್	Cholam or javar Sorghum vulgare ಜೋಳ 7						Kambu or Bajra Pennisetum typhoideum ಸಜ್ಜೆ 8						Ragi Eleusine coracana ರಾಗಿ 9						Maize Zeamays ಮುಸಕಿನ ಜೋಳ 10						Bengal gram Cicer arietinum ಕಡಲೆ 11					
	Present fortnight ಪಂಧ್ರಾವಾಡಾ		Past fortnight ಪಂಧ್ರಾವಾಡಾ		Corresponding fortnight of last year ಸಾಲ್ ಸೊಕಾಬಿಲಾ ಪಂಧ್ರಾವಾಡಾ		Present fortnight ಪಂಧ್ರಾವಾಡಾ		Past fortnight ಪಂಧ್ರಾವಾಡಾ		Corresponding fortnight of last year ಸಾಲ್ ಸೊಕಾಬಿಲಾ ಪಂಧ್ರಾವಾಡಾ		Present fortnight ಪಂಧ್ರಾವಾಡಾ		Past fortnight ಪಂಧ್ರಾವಾಡಾ		Corresponding fortnight of last year ಸಾಲ್ ಸೊಕಾಬಿಲಾ ಪಂಧ್ರಾವಾಡಾ		Present fortnight ಪಂಧ್ರಾವಾಡಾ		Past fortnight ಪಂಧ್ರಾವಾಡಾ		Corresponding fortnight of last year ಸಾಲ್ ಸೊಕಾಬಿಲಾ ಪಂಧ್ರಾವಾಡಾ		Present fortnight ಪಂಧ್ರಾವಾಡಾ		Past fortnight ಪಂಧ್ರಾವಾಡಾ		Corresponding fortnight of last year ಸಾಲ್ ಸೊಕಾಬಿಲಾ ಪಂಧ್ರಾವಾಡಾ	
	Srs	ch	Srs	ch	Srs	ch	Srs	ch	Srs	ch	Srs	ch	Srs	ch	Srs	ch	Srs	ch	Srs	ch	Srs	ch	Srs	ch	Srs	ch	Srs	ch	Srs	ch
Bangalore .	*	*	*	*	*	*	*	*	*	*	*	*	16	0	17	0	19	0	3 maizes for pies.	4	3 maizes for pies.	4	3 maizes for pies.	4	8	6	8	6	12	1
Kolar ...	*	*	*	*	*	*	*	*	*	*	*	*	15	0	15	0	20	0	*	*	*	*	*	*	9	0	9	0	10	0
Tumkur ...	16	0	16	0	21	0	*	*	*	*	*	*	18	0	18	0	20	0	*	*	*	*	*	*	9	0	9	0	10	0
Mysore ...	13	8	12	8	22	8	*	*	*	*	*	*	13	10	15	0	18	0	*	*	*	*	*	*	9	7	9	8	12	1
Hassan ...	*	*	*	*	*	*	*	*	*	*	*	*	16	0	16	0	20	0	*	*	*	*	*	*	7	8	8	0	10	0
Shimoga ...	12	10	12	10	23	2	*	*	*	*	*	*	12	10	14	11	23	0	*	*	*	*	*	*	8	6	8	6	12	1
Kadur ...	17	0	17	0	22	0	*	*	*	*	*	*	15	0	16	0	19	0	*	*	*	*	*	*	[illegible]	0	8	0	11	0
Chitaldrug	13	0	13	0	24	0	16	0	16	0	24	0	14	0	15	0	24	0	*	*	*	*	*	*	8	0	8	0	12	0

* Article not available.

Prices Current [Retail] of Food Grains, &c., at the Head-Quarters of the several Districts of the Mysore State during the fortnight ending 31st May 1906.—*contd.*

ಸನ 1906ನೆ ಇಸವಿ ಮೇ ಮಾಹೇ 31ನೆ ತಾರೀಖಿಗೆ ಆಖೈರಾದ ಪಂಧ್ರಾವಾಡಾ ಬಾಬತು ಚಿಲ್ಲರೆ ಅಂಗಡಿಗಳಲ್ಲಿ ಫರೋಖ್ತ್ ಆದ ಆಹಾರ ಜಿನಸಿ ವಗೈರೆ ನಿರಖುನಾಮಾ — ಡಿಸ್ಟ್ರಿಕ್ಟ್ ಹೆಡ್ ಕ್ವಾರ್ಟರ್‌ಗಳ ಬಾಬತು — ಸಶೇಷ.

Quantity per rupee by the standard seer of 80 tolas, &c.—*continued.* ರೂ. 1ಕ್ಕೆ. 80 ತೊಲಾ ತೂಕದ ಬಾಬತು ಶೇರುಗಳು — ಸಶೇಷ.

District ಡಿಸ್ಟ್ರಿಕ್	Grains and Pulses ಧಾನ್ಯ ವತ್ತು ಕಾಳುಗಳು																													
	Horse gram Dolichos biflorus ಹುರಳಿ						Arhar Cajanus indicus ತೊಗರಿ						Arhar Dal ತೊಗರಿ ಬ್ಯಾಳೆ						Kangani Setaria italica ನವಣೆ						Ghee (Clarified butter) ತುಪ್ಪ					
	12						13						14						15						16					
	Present fortnight ಪ್ರಸ್ತುತ ಪಂಧ್ರಾವಾಡಾ		Past fortnight ಗುಜಷ್ತಾ ಪಂಧ್ರಾವಾಡಾ		Corresponding fortnight of last year ಗುಜಷ್ತಾ ಸಾಲ್ ಸೊಕಾಬಿಲಾ ಪಂಧ್ರಾವಾಡಾ		Present fortnight ಪ್ರಸ್ತುತ ಪಂಧ್ರಾವಾಡಾ		Past fortnight ಗುಜಷ್ತಾ ಪಂಧ್ರಾವಾಡಾ		Corresponding fortnight of last year ಗುಜಷ್ತಾ ಸಾಲ್ ಸೊಕಾಬಿಲಾ ಪಂಧ್ರಾವಾಡಾ		Present fortnight ಪ್ರಸ್ತುತ ಪಂಧ್ರಾವಾಡಾ		Past fortnight ಗುಜಷ್ತಾ ಪಂಧ್ರಾವಾಡಾ		Corresponding fortnight of last year ಗುಜಷ್ತಾ ಸಾಲ್ ಸೊಕಾಬಿಲಾ ಪಂಧ್ರಾವಾಡಾ		Present fortnight ಪ್ರಸ್ತುತ ಪಂಧ್ರಾವಾಡಾ		Past fortnight ಗುಜಷ್ತಾ ಪಂಧ್ರಾವಾಡಾ		Corresponding fortnight of last year ಗುಜಷ್ತಾ ಸಾಲ್ ಸೊಕಾಬಿಲಾ ಪಂಧ್ರಾವಾಡಾ		Present fortnight ಪ್ರಸ್ತುತ ಪಂಧ್ರಾವಾಡಾ		Past fortnight ಗುಜಷ್ತಾ ಪಂಧ್ರಾವಾಡಾ		Corresponding fortnight of last year ಗುಜಷ್ತಾ ಸಾಲ್ ಸೊಕಾಬಿಲಾ ಪಂಧ್ರಾವಾಡಾ	
	Srs	ch	Srs	ch	Srs	ch	Srs	ch.	Srs	ch	Srs	ch	Srs	ch	Srs	ch	Srs	ch	Srs	ch	Srs	ch	Srs	ch	Srs	ch	Srs	ch	Srs	ch
Bangalore	13	7	13	7	15	10	13	8	14	1	12	15	8	4	8	4	8	8	*	*	*	*	*	*	0	12	0	13	1	2
Kolar ...	14	0	14	0	15	0	*	*	*	*	*	*	9	0	9	0	8	0	*	*	*	*	*	*	1	0	1	0	1	0
Tumkur ...	14	0	14	0	14	0	12	0	12	0	13	0	8	0	8	0	8	0	*	*	*	*	*	*	1	0	1	0	1	0
Mysore ...	14	8	12	8	15	5	9	0	12	4	13	2	7	2	10	0	7	5	*	*	*	*	*	*	0	13	2	8	1	3
Hassan ...	10	0	10	0	12	0	11	0	11	0	11	0	8	0	8	0	8	0	*	*	*	*	*	*	0	12	0	12	1	1
Shimoga ...	9	7	11	9	12	5	12	10	12	10	*	*	8	6	8	6	8	15	*	*	*	*	*	*	0	15	0	15	1	0
Kadur ...	9	0	11	0	12	0	*	*	12	0	12	0	8	0	9	0	8	0	*	*	*	*	*	*	1	3	1	3	1	3
Chitaldrug	11	0	11	0	14	0	14	0	14	0	14	0	8	0	8	0	9	0	20	0	20	0	30	0	1	0	1	0	1	0

* Article not available.

Prices Current [Retail] of Food Grains, &c., at the Head-Quarters of the several Districts of the Mysore State during the fortnight ending 31st May 1906—*contd.*

ಸನ್ 1906ನೆ ಇಸವಿ ಮೇ ಮಾಹೇ 31ನೆ ತಾರೀಖಿಗೆ ಆಖೈರಾದ ಪಂಧ್ರಾವಾಡಾ ಬಾಬತು ಜಿಲ್ಲರೆ ಅಂಗಡಿಗಳಲ್ಲಿ ಪುರೋಖ್ತ್ ಆದ ಆಹಾರಜಿನಸಿ ವಗೈರೆ ನಿರಖುನಾಮಾ— ಡಿಸ್ಟ್ರಿಕ್ಟ್ ಹೆಡ್ ಕ್ವಾರ್ಟರ್‌ಗಳ ಬಾಬತು—ಸಕೇಪ.

Quantity per rupee by the standard seer of 80 tolas, &c.—*continued.* ರೂ. 1ಕ್ಕೆ 80 ತೊಲಾ ತೂಕದ ಬಾಬತು ಶೇರುಗಳು—ಸಕೇಪ.

District ಡಿಸ್ಟ್ರಿಕ್ಟ	Wheat Flour ಗೋಧಿ ಹಿಟ್ಟು 17						Sea Salt ಕಲ್ಲುಪ್ಪು 18						Oil Seeds Gingelly Sesamum indicum ಎಳ್ಳು 19						Sugar Goor or jaggory ಬೆಲ್ಲ 20						Fibres Cotton cleaned Gossypium ಅರಳೆ 21					
	Present fortnight ಪುಜಕ್ಕೂರಿ ಪಂಧ್ರಾವಾಡಾ		Past fortnight ಗುಜಷ್ತಾ ಪಂಧ್ರಾವಾಡಾ		Corresponding fortnight of last year ಗುಜಷ್ತಾ ಸಾಲ್ ಸೊಕಾಬಿಲಾ ಪಂಧ್ರಾವಾಡಾ		Present fortnight ಪುಜಕ್ಕೂರಿ ಪಂಧ್ರಾವಾಡಾ		Past fortnight ಗುಜಷ್ತಾ ಪಂಧ್ರಾವಾಡಾ		Corresponding fortnight of last year ಗುಜಷ್ತಾ ಸಾಲ್ ಸೊಕಾಬಿಲಾ ಪಂಧ್ರಾವಾಡಾ		Present fortnight ಪುಜಕ್ಕೂರಿ ಪಂಧ್ರಾವಾಡಾ		Past fortnight ಗುಜಷ್ತಾ ಪಂಧ್ರಾವಾಡಾ		Corresponding fortnight of last year ಗುಜಷ್ತಾ ಸಾಲ್ ಸೊಕಾಬಿಲಾ ಪಂಧ್ರಾವಾಡಾ		Present fortnight ಪುಜಕ್ಕೂರಿ ಪಂಧ್ರಾವಾಡಾ		Past fortnight ಗುಜಷ್ತಾ ಪಂಧ್ರಾವಾಡಾ		Corresponding fortnight of last year ಗುಜಷ್ತಾ ಸಾಲ್ ಸೊಕಾಬಿಲಾ ಪಂಧ್ರಾವಾಡಾ		Present fortnight ಪುಜಕ್ಕೂರಿ ಪಂಧ್ರಾವಾಡಾ		Past fortnight ಗುಜಷ್ತಾ ಪಂಧ್ರಾವಾಡಾ		Corresponding fortnight of last year ಗುಜಷ್ತಾ ಸಾಲ್ ಸೊಕಾಬಿಲಾ ಪಂಧ್ರಾವಾಡಾ	
	Srs	ch	Srs	ch	Srs	ch	Srs	ch	Srs	ch	Srs	ch	Srs	ch	Srs	ch	Srs	ch	Srs	ch	Srs	ch	Srs	ch	Srs	ch	Srs	ch	Srs	ch
Bangalore	5	12	5	15	8	1	16	11	15	8	12	10	5	4	5	4	6	9	8	0	8	0	6	0	1	14	1	14	1	14
Kolar ...	8	0	8	0	8	0	15	0	15	0	12	0	8	0	8	0	8	0	9	0	9	0	9	0	*	*	*	*	*	*
Tumkur ..	7	0	7	0	8	0	13	0	13	0	12	0	8	0	8	0	8	0	4	0	4	0	4	0	2	0	2	0	2	0
Mysore ...	8	0	8	0	7	4	15	12	15	0	14	11	5	4	6	4	6	2	7	8	7	8	5	4	2	4	7	8	2	4
Hassan ...	5	0	7	0	6	0	10	0	14	0	12	0	6	0	6	0	8	0	6	0	6	0	5	0	2	6	2	6	2	6
Shimoga ...	5	12	5	12	8	6	16	13	16	13	16	3	7	6	7	6	8	6	7	3	7	3	4	13	1	13	1	13	2	2
Kadur ...	6	0	6	0	6	0	14	0	14	0	12	0	6	0	8	0	8	0	5	4	5	4	5	4	1	5	1	5	1	5
Chitaldrug	8	0	8	0	9	0	10	0	10	0	10	0	8	0	8	0	12	0	3	0	3	0	8	0	3	0	3	0	3	0

*Article not available.

Prices Current [Retail] of Food Grains, &c., at the Head-Quarters of the several Districts of the Mysore State during the fortnight ending 31st May 1906—*contd.*

ಸನ್ 1906ನೆ ಇಸವಿ ಮೇ ಮಾಹೇ 31ನೆ ತಾರೀಖಿಗೆ ಆಖೈರಾದ ಪಂಧ್ರಾವಾಡಾ ಬಾಬತು ಜಿಲ್ಲರೆ ಅಂಗಡಿಗಳಲ್ಲಿ ಪುರೋಖ್ತ್ ಆದ ಆಹಾರ ಜಿನಸಿ ವಗೈರೆ ನಿರಖುನಾಮಾ— ಡಿಸ್ಟ್ರಿಕ್ಟ್ ಹೆಡ್ ಕ್ವಾರ್ಟರ್‌ಗಳ ಬಾಬತು—ಸಶೇಷ.

Quantity per rupee by the standard seer of 80 tolas, &c.—*continued.* ರೂ. 1ಕ್ಕೆ 80 ತೊಲಾ ತೂಕದ ಬಾಬತು ಶೇರುಗಳು—ಸಶೇಷ.

District ಡಿಸ್ಟ್ರಿಕ್ಟ್	Drugs and Narcotics						Fodder																		Garden produce											
	Tobacco leaf Nicotiana tabacum and N. rustica ಹೊಗೆಸೊಪ್ಪು						Grass ಹಸೀ ಹುಲ್ಲು						Straw ಮಣಹುಲ್ಲು						Javar stalks ಜೋಳದ ಕಡ್ಡಿ						Turmeric Curcuma longa ಅರಿಶಿನ						Coffee Coffea arabica ಕಾಫಿ					
	22						23						24						25						26						27					
	Present fortnight ಸಜಕ್ಕೂರ್ ಪಂಧ್ರಾವಾಡಾ		Past fortnight ಗುಜಷ್ತಾ ಪಂಧ್ರಾವಾಡಾ		Corresponding fortnight of last year ಗುಜಷ್ತಾ ಸಾಲ್ ಸೊಕಾಬಿಲಾ ಪಂಧ್ರಾವಾಡಾ		Present fortnight ಸಜಕ್ಕೂರ್ ಪಂಧ್ರಾವಾಡಾ		Past fortnight ಗುಜಷ್ತಾ ಪಂಧ್ರಾವಾಡಾ		Corresponding fortnight of last year ಗುಜಷ್ತಾ ಸಾಲ್ ಸೊಕಾಬಿಲಾ ಪಂಧ್ರಾವಾಡಾ		Present fortnight ಸಜಕ್ಕೂರ್ ಪಂಧ್ರಾವಾಡಾ		Past fortnight ಗುಜಷ್ತಾ ಪಂಧ್ರಾವಾಡಾ		Corresponding fortnight of last year ಗುಜಷ್ತಾ ಸಾಲ್ ಸೊಕಾಬಿಲಾ ಪಂಧ್ರಾವಾಡಾ		Present fortnight ಸಜಕ್ಕೂರ್ ಪಂಧ್ರಾವಾಡಾ		Past fortnight ಗುಜಷ್ತಾ ಪಂಧ್ರಾವಾಡಾ		Corresponding fortnight of last year ಗುಜಷ್ತಾ ಸಾಲ್ ಸೊಕಾಬಿಲಾ ಪಂಧ್ರಾವಾಡಾ		Present fortnight ಸಜಕ್ಕೂರ್ ಪಂಧ್ರಾವಾಡಾ		Past fortnight ಗುಜಷ್ತಾ ಪಂಧ್ರಾವಾಡಾ		Corresponding fortnight of last year ಗುಜಷ್ತಾ ಸಾಲ್ ಸೊಕಾಬಿಲಾ ಪಂಧ್ರಾವಾಡಾ		Present fortnight ಸಜಕ್ಕೂರ್ ಪಂಧ್ರಾವಾಡಾ		Past fortnight ಗುಜಷ್ತಾ ಪಂಧ್ರಾವಾಡಾ		Corresponding fortnight of last year ಗುಜಷ್ತಾ ಸಾಲ್ ಸೊಕಾಬಿಲಾ ಪಂಧ್ರಾವಾಡಾ	
	Srs	ch	Srs	ch	Srs	ch	Srs	ch	Srs	ch	Srs	ch	Srs	ch	Srs	ch	Srs	ch	Srs	ch	Srs	ch	Srs	ch	Srs	ch	Srs	ch	Srs	ch	Srs	ch	Srs	ch	Srs	ch
Bangalore ...	1	5	1	5	1	4	45	0	45	0	54	0	48	0	48	0	60	0	*	*	*	*	*	*	3	6	3	6	6	0	1	5	1	4	1	2
Kolar ...	2	8	2	8	2	8	75	0	75	0	75	0	50	0	50	0	50	0	*	*	*	*	*	*	4	0	4	0	4	0	1	0	1	0	1	0
Tumkur ...	2	6	2	6	1	8	80	0	80	0	80	0	32	0	32	0	32	0	*	*	*	*	*	*	4	0	4	0	4	0	1	0	1	0	1	0
Mysore ...	1	2	3	12	1	3	36	0	120	0	80	0	51	0	140	0	170	0	100	0	100	0	90	0	3	9	12	0	5	4	1	8	5	0	1	2
Hassan ...	2	6	2	6	2	6	240	0	240	0	240	0	120	0	120	0	120	0	*	*	*	*	*	*	4	0	4	0	6	0	1	8	1	5	1	8
Shimoga ...	2	6	2	6	2	6	*	*	*	*	*	*	112	0	112	0	224	0	*	*	*	*	*	*	3	0	3	0	4	13	1	10	1	10	1	8
Kadur ..	1	5	1	5	1	5	*	*	*	*	*	*	17	9	17	9	17	9	*	*	*	*	*	*	2	10	2	10	2	10	1	3	1	3	1	3
Chitaldrug ..	3	0	3	0	3	0	*	*	*	*	*	*	30	0	30	0	60	0	30	0	30	0	40	0	3	0	3	0	3	0	1	0	1	0	1	0

* Article not available.

Prices Current [Retail] of Food Grains, &c., at the Head-Quarters of the several Districts of the Mysore State during the fortnight ending 31st May 1906—*concld.*

ಸನ್ 1906ನೆ ಇಸವಿ ಮೇ ತಿಂಗಳ 31ನೆ ತಾರೀಖಿಗೆ ಆಖೈರಾದ ಪಂಧ್ರಾವಾಡಾ ಬಾಬತು ಚಿಲ್ಲರೆ ಅಂಗಡಿಗಳಲ್ಲಿ ಪ್ರಚಲಿತದ ಆಹಾರಜಿನಸು ವಗೈರೆ ನಿರಖುನಾಮಾ—ಡಿಸ್ಟ್ರಿಕ್ಟ್ ಹೆಡ್ ಕ್ವಾರ್ಟರ್‌ಗಳ ಬಾಬತು-ಸಮಾಪ್ತಿ.

District ಡಿಸ್ಟ್ರಿಕ್ಟ್	Quantity per rupee by the standard seer of 80 tolas, &c.—*concluded* ರೂ. 1ಕ್ಕೆ 80 ತೊಲಾ ತೂಕದ ಬಾಬತು ಶೇರುಗಳು—ಸಮಾಪ್ತಿ																								Plough bullocks (pair) ಉಳೋ ಎತ್ತುಗಳು ಜೊತೆ 1ಕ್ಕೆ			Sheep (score) ಕುರಿಗಳು 20ಕ್ಕೆ		
	Garden produce.																													
	Cardamom Amomum Aromaticum ಯಾಲಕ್ಕಿ						Supari Areca catechu ಅಡಿಕೆ						Dry cocoanut Cocos nucifera ಖೊಬರಿ						Hides (cattle) ದನವಿನ ಚರ್ಮ											
	28						29						30						31						32			33		
	Present fortnight ಪಂಜಕ್ಕೂರಿ ಪಂಧ್ರಾವಾಡಾ		Past fortnight ಗುಜಿಷ್ಟಾ ಪಂಧ್ರಾವಾಡಾ		Corresponding fortnight of last year ಗುಜಿಷ್ಟಾ ಸಾಲ್ ಸೊಕಾಬಿಲಾ ಪಂಧ್ರಾವಾಡಾ		Present fortnight ಪಂಜಕ್ಕೂರಿ ಪಂಧ್ರಾವಾಡಾ		Past fortnight ಗುಜಿಷ್ಟಾ ಪಂಧ್ರಾವಾಡಾ		Corresponding fortnight o last year ಗುಜಿಷ್ಟಾ ಸಾಲ್ ಸೊಕಾಬಿಲಾ ಪಂಧ್ರಾವಾಡಾ		Present fortnight ಪಂಜಕ್ಕೂರಿ ಪಂಧ್ರಾವಾಡಾ		Past fortnight ಗುಜಿಷ್ಟಾ ಪಂಧ್ರಾವಾಡಾ		Corresponding fortnight of last year ಗುಜಿಷ್ಟಾ ಸಾಲ್ ಸೊಕಾಬಿಲಾ ಪಂಧ್ರಾವಾಡಾ		Present fortnight ಪಂಜಕ್ಕೂರಿ ಪಂಧ್ರಾವಾಡಾ		Past fortnight ಗುಜಿಷ್ಟಾ ಪಂಧ್ರಾವಾಡಾ		Corresponding fortnight of last year ಗುಜಿಷ್ಟಾ ಸಾಲ್ ಸೊಕಾಬಿಲಾ ಪಂಧ್ರಾವಾಡಾ		Present fortnight ಪಂಜಕ್ಕೂರಿ ಪಂಧ್ರಾವಾಡಾ	Past fortnight ಗುಜಿಷ್ಟಾ ಪಂಧ್ರಾವಾಡಾ	Corresponding fortnight of last year ಗುಜಿಷ್ಟಾ ಸಾಲ್ ಸೊಕಾಬಿಲಾ ಪಂಧ್ರಾವಾಡಾ	Present fortnight ಪಂಜಕ್ಕೂರಿ ಪಂಧ್ರಾವಾಡಾ	Past fortnight ಗುಜಿಷ್ಟಾ ಪಂಧ್ರಾವಾಡಾ	Corresponding fortnight of last year ಗುಜಿಷ್ಟಾ ಸಾಲ್ ಸೊಕಾಬಿಲಾ ಪಂಧ್ರಾವಾಡಾ
	Srs	ch	Srs	ch	Srs	ch	Srs	ch	Srs	ch	Srs	ch	Srs	ch	Srs	ch	Srs	ch	Srs	ch	Srs	ch	Srs	ch	Rs a p	Rs a p	Rs a p	Rs a p	Rs a p	Rs a p
Bangalore .	0	3	0	4	0	3	1	4	1	4	1	6	2	6	2	6	3	3	0	15	0	15	0	15	120 to 150	120 to 150	120 to 150	160 0 0	160 0 0	160 0 0
Kolar ...	0	4	0	4	0	4	1	0	1	0	1	0	3	0	3	0	3	0	2	0	2	0	2	0	100 0 0	100 0 0	100 0 0	100 0 0	100 0 0	100 0 0
Tumkur ...	0	2	0	2	0	2	1	4	1	4	1	4	3	0	3	0	2	8	1	0	1	0	1	0	40 0 0	40 0 0	40 0 0	100 0 0	100 0 0	80 0 0
Mysore ...	0	8	2	0	0	4	1	4	4	4	1	9	2	10	2	10	1	14	0	13	0	10	0	13	70 0 0	70 0 0	70 0 0	100 0 0	100 0 0	100 0 0
Hassan ...	0	6	0	6	0	7	2	6	2	0	2	6	2	8	2	8	2	8	2	8	2	8	2	8	30 0 0	30 0 0	30 0 0	100 0 0	100 0 0	100 0 0
Shimoga ...	0	6	0	6	0	10	1	3	1	8	1	3	3	0	3	0	3	0	1	8	1	8	1	8	60 0 0	60 0 0	50 0 0	60 0 0	60 0 0	60 0 0
Kadur ...	1	0	0	6	0	3	1	3	1	3	1	3	2	1	2	1	2	1	Rs a p 2 0 0		Rs a p 2 0 0		Rs a p 2 0 0 per hide		40 0 0	40 0 0	40 0 0	60 0 0	60 0 0	60 0 0
Chitaldrug	0	1/8	0	1/8	0	1/8	2	0	2	0	2	0	3	0	3	0	3	0	3	0	3	0	3	0	From 20 to 80 Rs.	From 20 to 80 Rs.	From 20 to 80 Rs.	From 80 to 120 Rs.	From 80 to 120 Rs.	From 80 to 120 Rs.

By Order,
P. G. D'SOUZA,
for *Secy. to Govt., Gen. & Rev. Dept.*

Prices-Current [*Retail*] of Food Grains and Salt in the Mysore State during the fortnight ending the 31st May 1906

Quantity per rupee in seer of 80 tolas, *vide* Government of India No. 1 – 21, dated 10th February 1874.

Fortnight ending.	No.	District.	Wheat.			Barley.			Rice, best sort.			Rice, common.			Javar or cholam (*Sorghum valgare*).			Bajra or kambu (*Pennisetum typhoideum.*)			Marua or ragi (*Eleusine Corocana.*)		
			Present return.	Next preceding return.	Corresponding return of last year.	Present return.	Next preceding return.	Corresponding return of last year.	Present return.	Next preceding return.	Corresponding return of last year.	Present return.	Next preceding return.	Corresponding return of last year.	Present return.	Next preceding return.	Corresponding return of last year.	Present return.	Next preceding return.	Corresponding return of last year.	Present return.	Next preceding return.	Corresponding return of last year.
	1	2	3	4	5	6	7	8	9	10	11	12	13	14	15	16	17	18	19	20	21	22	23
			S. c.	S. c.	S. c.	S. c.	S. c.	S. c.	S. c.	S. c.	S. c.	S. c.	S. c.	S. c.	S. c.	S. c.	S. c.	S. c.	S c.	S. c.	S. c.	S. c.	S. c.
31st May 1906.	1	Bangalore.	8 13	9 1	12 5	* *	* *	* *	6 9	6 9	8 10	7 7	7 7	10 6	* *	* *	* *	* *	* *	* *	16 0	17 0	19 0
	2	Kolar ...	8 0	8 0	10 0	8 0	8 0	10 0	7 0	7 0	8 0	7 8	7 8	9 0	* *	* *	* *	* *	* *	* *	15 0	15 0	20 0
	3	Tumkur ..	7 0	7 4	10 0	7 0	7 0	10 0	6 8	6 8	8 8	8 0	8 0	9 0	16 0	16 0	21 0	* *	* *	* *	18 0	18 0	20 0
	4	Mysore ...	6 4	6 4	10 8	6 13	6 4	* *	7 5	7 0	9 2	8 7	8 0	10 11	13 8	12 8	22 8	* *	* *	* *	13 10	15 0	18 0
	5	Hassan ...	6 0	7 7	10 0	6 0	6 6	10 0	7 8	7 8	9 0	8 0	8 0	10 0	* *	* *	* *	* *	* *	* *	16 0	16 0	20 0
	6	Shimoga...	7 6	7 6	11 9	* *	* *	* *	6 5	7 6	8 6	7 6	8 6	11 9	12 10	12 10	23 2	* *	* *	* *	12 10	14 11	23 0
	7	Kadur ...	7 0	8 0	10 0	8 0	11 0	11 0	7 0	7 0	8 0	8 0	8 0	10 0	17 0	17 0	22 0	* *	* *	* *	15 0	16 0	19 0
	8	Chitaldrug	8 0	8 0	12 0	8 0	8 0	12 0	7 0	7 0	9 0	8 0	8 0	10 0	13 0	13 0	24 0	16 0	16 0	24 0	14 0	15 0	24 0
		Average ..	7 5	7 10	10 13	7 5	7 12	10 10	6 14	7 0	8 9	7 13	7 15	10 1	14 7	14 4	22 8	16 0	16 0	24 0	15 0	15 13	20 6

* Article not available.

768

Prices-Current [*Retail*] of Food Grains and Salt in the Mysore State during the fortnight ending the 31st May 1906—*concluded.*

Fortnight ending.	No.	District	Quantity per rupee in seer of 80 tolas, *vide* Government of India No. 1—21, dated 10th February 1874.																																		Remarks
			Kangni or kakum Italian millet (*Setaria Italica.*)						Gram, chonna, chola, kadale or sunage (*Cicer Arietinum.*)						Indian-corn or maize (*Zea Mays.*)						Arhar or Thur-cadjan pea (*Cajanus Indicus.*)						Arhar Dal.						Salt.						
			Present return.		Next preceding return.		Corresponding return of last year		Present return.		Next preceding return.		Corresponding return of last year.		Present return.		Next preceding return.		Corresponding return of last year.		Present return.		Next preceding return.		Corresponding return of last year.		Present return.		Next preceding return.		Corresponding return of last year.		Present return.		Next preceding return.		Corresponding return of last year.		
			24		25		26		27		28		29		30		31		32		33		34		35		36		37		38		39		40		41		42
			S.	c.	S.	c.	S.	c.	S.	c.	S.	c.	S.	c.	S.	c.	S.	c.	S.	c.	S.	c.	S.	c.	S.	c.	S.	c	S.	c.	S.	c.	S.	c.	S.	c.	S.	c.	
31st May 1906.	1	Bangalore	*	*	*	*	*	*	8	6	8	6	12	1	3 maizes for 4 pies.		3 maizes for 4 pies.		3 maizes for 4 pies.		13	8	14	1	12	15	8	4	8	4	8	8	16	11	15	8	12	10	
	2	Kolar ...	*	*	*	*	*	*	9	0	9	0	10	0	*	*	*	*	*	*	*	*	*	*	*	*	9	0	9	0	8	0	15	0	15	0	12	0	
	3	Tumkur ;	*	*	*	*	*	*	9	0	9	0	10	0	*	*	*	*	*	*	12	0	12	0	13	0	8	0	8	0	8	0	13	0	13	0	12	0	
	4	Mysore ...	*	*	*	*	*	*	9	7	9	8	12	1	*	*	*	*	*	*	9	0	12	4	13	2	7	2	10	0	7	5	15	12	15	0	14	11	
	5	Hassan ..	*	*	*	*	*	*	7	8	8	0	10	0	*	*	*	*	*	*	11	0	11	0	11	0	8	0	8	0	8	0	10	0	14	0	12	0	
	6	Shimoga ..	*	*	*	*	*	*	8	6	8	6	12	1	*	*	*	*	*	*	12	10	12	10	*	*	8	6	8	6	8	15	16	13	16	13	16	13	
	7	Kalur ...	*	*	*	*	*	*	8	0	8	0	11	0	*	*	*	*	*	*	*	*	12	0	12	0	8	0	9	0	8	0	14	0	14	0	12	0	
	8	Chitaldrug	20	0	20	0	20	0	8	0	8	0	12	0	*	*	*		*	*	14	0	14	0	14	0	8	0	8	0	9	0	10	0	10	0	10	0	
		Average	20	0	20	0	30	0	8	7	8	8	11	2	3 maizes for 4 pies.		3 maizes for 4 pies.		3 maizes for 4 pies.		12	0	12	9	12	11	8	1	8	9	8	3	13	14	14	3	12	12	

* Article not available.

GOVT. OF H. H. THE MAHARAJA OF MYSORE, GENL. AND REV. SECRETARIAT,
Dated Bangalore, the 8th June 1906.

By Order,
P. G. D'SOUZA,
for *Secy. to Govt., Gen. & Rev. Dept.*

LIST OF PRIZES TO BE AWARDED AT THE HORTICULTURAL SHOW TO BE HELD AT THE LAL-BAGH ON 2ND AUGUST 1906.

CLASS I.—PERENNIAL FLOWERS IN POTS.

No.	Description.	Rs.
1.	Best Standard Roses, in six varieties and six pots	8
2.	Second best do in do do	5
3.	Best Dwarf Roses in do do	6
4.	Second best do in do do	4
5.	Best General Collection of Roses not including the above; not less than twelve pots and not exceeding twenty	15
6.	Second best do do do	10
7.	Third best do do do	5
8.	Best new Roses, exhibited for the first time	8
9.	Second best do do	5
*10.	Best General Collection of Foliage Plants, without duplicates	25
*11.	Second best do do	15
*12.	Best General Collection of Ferns, without duplicates	25
*13.	Second best do do	15
14.	Best Collection of Palms, one plant of each species	8
15.	Best Group of Aralias and Panax, one plant of each species	6
16.	Best Caladiums, including only one plant of each variety	7
17.	Second best do do do	5
18.	Best Collection of Gladioli, not less than six varieties	6
19.	Second best	4
20.	Best Collection of Anthuriums including only one plant of each variety	8
21.	Best Collection of Dracænas do do do	8
22.	Best New Geraniums, exhibited for the first time; one pot of each	7
23.	Best Double Geraniums, in six or more varieties, not exceeding 25 pots	6
24.	Second best do do do	4
25.	Best Single Geraniums, in eight or more varieties, not exceeding 25 pots	6
26.	Second best do do do	4
27.	Best Ivy-leaved Geraniums, double or single, not exceeding 25 pots	5
28.	Best Dahlias	7
29.	Second best Dahlias	5
30.	Best Achimenes, not less than twelve varieties	6
31.	Second best do do	3
32.	Best Tuberous-rooted Begonias, not less than eight varieties	8
33.	Second best do do	5
34.	Best Perennial Phlox, in three or more varieties	5
35.	Second best do do	3
36.	Best Pansies, in eight or more varieties, but not exceeding 25 pots	6
37.	Second best do do do	3
38.	Best Carnations, in three or more varieties	5
39.	Second best do do	3
40.	Best Cyclamen	5
41.	Best Gloxinias	6
42.	Best Fuchsias in four or more varieties	5
43.	Best Double Petunias, in four or more varieties	6
44.	Second best do do	4
45.	Best Verbenas, in six or more varieties, but not exceeding 15 pots	5
46.	Second best do do do	3
47.	Best Chrysanthemums, in eight or more varieties, but not exceeding 25 pots	
48.	Second best do do do	5
49.	Best Cannas in twelve or more varieties	7
50.	Second best do do	5
51.	Best Novelties in Perennials, exhibited for the first time, one plant of each	6
	Total	353

CLASS II.—ANNUAL FLOWERS IN POTS.

*1.	Best General Collection of Annuals in flower	8
*2.	Second best do do	[illegible]
3.	Best Double Sunflower	3
4.	Best Asters, in six or more varieties	6
5.	Second best do do	4
6.	Best Nasturtiums, in six or more varieties	4
7.	Second best do do	2
*8.	Best Balsams, in six or more varieties	4
9.	Second best do do	2
10.	Best Phlox Drummondi, in ten or more varieties limited to fifty pots	6
11.	Second best do do	4
12.	Best Single Petunias, in six or more varieties	5
13.	Second best do do	3
14.	Best Lobelia	3
15.	Best Salpiglossis	4
16.	Second best do	2
17.	Best Pinks, in ten or more varieties, limited to 50 pots	4
18.	Second best do do	2
	Total	71

CLASS III.—CUT FLOWERS.

No.	Description	Rs.
1.	Best Arrangement of Flowers, &c., in a vase	8
2.	Second best do do	6
3.	Third best do do	3
*4.	Best Hand-Bouquet	6
*5.	Second best do	4
6.	Best Collection of Cultivated Flowers not less than twelve species or varieties	6
7.	Second best do do	3
8.	Best Collection and Arrangement of Wild Flowers and Grasses	5
9.	Best Arrangement for Dinner Table	8
10.	Second best do	5
11.	Best Cut Roses, not less than twelve varieties to be exhibited singly on Exhibition desks	6
12.	Second best do do do do	4
13.	Best Dahlias do do do do	3
14.	Second best do do do do	2
15.	Best Chrysanthemums do do do	3
16.	Second best do do do do	2
	Total ...	74

Mr. Geo. Hodson's prize of Rs. 10 for the most artistic arrangement of cut flowers in a vase, basket or bowl; to be competed for by children under twelve years of age. The arrangement of the flowers to be done at the Show by the child, who may be attended by a native servant only.

CLASS IV.—FRUITS.

*1.	Best Collection of Fruits of all kinds arranged in a basket	10
*2.	Second best do do	7
*3.	Third best do do	4
4.	Best Apples, in six or more varieties	10
5.	Second best do do	7
6.	Best Peaches, in two or more varieties	7
7.	Second best do do	4
8.	Best Figs	4
9.	Second best do	2
*10.	Best Bananas (only of the finest varieties)	5
11.	Second best do do	3
*12.	Best new Mangoes	6
13.	Best Raspberries	3
14.	Best Grapes, in three or more varieties	6
15.	Second best do do	4
16.	Best Guavas	4
17.	Best Hill Gooseberry	2
18.	Best Pumeloes	3
	Total ..	91

CLASS V.—VEGETABLES.

*1.	Best Potatoes, in six or more varieties, half a maund of each	10
2.	Second best do do do	6
3.	Third best do do do	4
4.	Best Cabbage, not less than three, and excluding Drumhead	5
5.	Second best do do do	3
6.	Best Brussels Sprouts	4
7.	Best English Carrots	5
8.	Second best do	3
9.	Best Blanched Celery	5
10.	Second best do	3
11.	Best Cabbage Lettuce	3
12.	Best Cos Lettuce	3
13	Best Endive	2
14	Best Parsnips	4
15.	Best Beetroot	4
16.	Best Green Peas	5
17.	Second best do	3
18.	Best Onions	4
19.	Best Asparagus	5
*20.	Best Custard Marrow	4
21.	Best Turnips	4
22.	Best Cauliflower, not less than three	5
23.	Second best do	3
24.	Best Knol-khol	3
25.	Best Cho-cho	2
26.	Best Tomato, not less than three varieties	3
*27.	Best Basket of English Vegetables	10

CLASS V.—VEGETABLES—*concld.*

No.	Description.	Rs.
28.	Second best of English vegetables	6
29.	Third best do do	3
30.	Best Collection of Sweet Herbs	5
31.	Best Bendekayi	2
32.	Best Hagalakayi	2
33.	Best Gorikayi	2
34.	Best Huralikayi	2
35.	Best Padavalakayi	2
36.	Best Budi Kumbalakayi	2
37.	Best Collection of Country Vegetables in varieties other than those mentioned above	5
	Total ...	146
	Grand Total ..	735

General Conditions.

1. Prizes marked by an asterisk are open to the whole Province, as also to the Presidency of Madras.

2. In view to arrangements being made for staging plants, it is requested that exhibitors will notify to the undersigned, four days prior to the Show, what number of pots they intend to enter and for what prize they intend to compete. Plants intended for competition should be delivered in the Conservatory before 4 P. M. on the day previous to the Show.

3. Cut Flowers may be delivered up till 2 P. M. on the day of the Show, but not later if intended for competition.

4. No prize shall be awarded unless there are at least two competitors for it, except in cases of rare excellence, when the Judges will use their own discretion.

The number of exhibits in all classes and sections should exceed the number of prizes offered, otherwise the Judges will be authorised to reduce the full value of such prizes.

5. It shall also be competent for the Judges to reduce the amount of prizes if, in their opinion, the articles exhibited do not merit the full sums.

6. Obtrusive staging, overcrowding, packing to conceal blemishes, and artificial support to blooms, etc., will be judged as defects to an exhibit, preference being given to natural growth and artistic arrangement.

7. Where a number limit is laid down, any exhibit exceeding that number shall be disqualified.

8. Where one plant of each species or variety is specified as a condition, any exhibit containing duplicates shall be disqualified.

9. If funds are available, the Judges may award special extra prizes in cases of exceptional merit.

10. All exhibits sent for competition must be *bona fide* the produce of, or have been raised by, the exhibitors; and unless otherwise specified, must have been grown in Bangalore.

The Judges may withhold any prize untill proof of these conditions be produced. Contractors bringing up fruit and vegetables for competition in their own name are disqualified.

11. Exhibitors will not be permitted to remove their exhibits until the Show is closed, and gardeners and others found offering articles for sale before 6 P. M. on the day of the Show shall be summarily ejected.

12. The names of exhibitors can only be attached to exhibits when the judging has been completed. Plant labels will be supplied by the Show Executive, subject to the approval of the same.

The following Rules for awarding Medals at the Horticultural Shows are hereby notified to the public.

The Government of His Highness the Maharaja have sanctioned the grant of medals in addition to the usual money prizes offered at the half yearly horticultural shows, subject to the following conditions :—

(1) The medals will consist of a gold medal for classes I and II, a silver medal for class IV and a bronze medal for class V.

(2) These medals will be awarded by the Judges, at their discretion, at the Summer Show held in July or August in each year.

(3) The following exhibitors will be qualified for the award of a medal :—

(*a*) The exhibitor of the best all-round exhibit in the appropriate class or classes taking the two shows of the calendar year together.

(*b*) The exhibitor of an exhibit of more than ordinary excellence in any sub-class.

(*c*) The exhibitor of any specially meritorious novelty.

(4) No exhibitor who has been awarded a medal in any class will be qualified to receive another medal in that class during the three calendar years succeeding that in which he has received the medal.

(5) No exhibitor will be qualified to receive a medal who is not the *bona fide* cultivator of his exhibit, or the actual occupant of the garden in which the exhibit was raised, *e.g.*, no contractor, who has merely purchased fruit or vegetables exhibited will be eligible.

(6) It will be open to the Judges to withhold any or all the medals in any year on the ground of deficiency of merit in the exhibits.

J. CAMERON,
Supt., Govt. Gardens.

INDEX

774

TO THE

MYSORE GAZETTE.

PART I.

SUBJECTS.

FROM 1ST JULY TO 31ST DECEMBER 1905.

A

Addenda to Notifn. No. 12335—L. R. 479-04-2, dated 10th June 1905. 585.

Assistant Commissioner, Senior, of the Shimoga Dist. to be in charge of Shimoga Dist. 536.

———of Try. Dept., Kolar Dist., to be in charge of the Dist. Police. 701.

———of Try. Dept., Chikmagalur Dist. to be in charge of the Kadur Excise Divisional Office. 715.

———2nd Genl., of the Tumkur Dist. authorized to take orders for the acquisition of the land mentioned in Notifn. No. R. 3268—Mis. 317-04-2, dated, 6th October 1904. 538.

B

Board, Sanitary.—Appointment of non-official members for the Kolar Gold Fields, 669.

C

Cemeteries—Amendments to the Ecclesiastical Rules applicable to Govt., in the State. 651.

Christian Marriage Act, 1872.—Appointment of—

Revd. Sempson David as Marriage Registrar under the Indian, 655.

———Revocation of the appointment of Revd. Francis George Gray as a Marriage Registrar under the Indian, 536.

Civil Appointments.—Informing Heads of Departments and all other officers that Notifications in the Gazette to be accepted as disposing of all references regarding, 577, 586, 595, 604, 612, 620, 630, 638, 646, 654, 665, 670, 680, 690, 701, 710, 715, 723, 731, 737, 744, 756.

Corrigenda to Notifn. No. R. 1754—L. R. 120-05-1, dated 9th August 1905. 612, 615.

Courts.—Investing the Subordinate Judges', of Bangalore and Shimoga with the functions of a Dist. Court conferred by Sec. 22 under Regln., VII of 1901. 596.

———Do the Subordinate Judge of Shimoga with the powers conferred by Rule 5 of the Rules relating to the custody and guardianship of minors. 646.

———Do the Subordinate Judges', of Mysore and Shimoga with the powers conferred on Dist. Courts by Secs. 344 to 359 of the Code of Civil Procedure. 596.

———Withdrawing the Small Cause Jurisdiction conferred on the Munsiff of Shimoga, by Sec. 16 of the Mysore Civil Courts Regln., I of 1883. 621.

———Exempting Messrs. Sha Syed Ahmed Shuttari *alias* Saliman Padsha Sajjada Nishin Sajjada of the Affamulla Sha Saheb, Shuttari Durga, from personal appearance in the Civil, of the State. 659.

———Continuation of 2nd Addl. Munsiffs', at Bangalore and Mysore. 724.

D

Dasara.—List of gentlemen elected for the Representative Assembly of 1905. 641, 650, 652, 658.

Dharmadarsi.—Appointment of, for certain temples and institutions at—
Purada, Kadur Tk. 576.
Turuvekere. 631.
Kigga, Koppa Tk. 639.
Bangalore City. 724.
Varuna, Mysore Tk. 724.

Dharmadarsis.—Appointment of, for certain temples and institutions at—
Harihar. 576.
Bannur, T.-Narsipur Tk. 621.
Somapur, Tarikere Tk. 631.
Mysore. 639.
Bellur, Nagamangala Tk. 639.
Gorur, Hassan Tk. 682.
Bangalore City. 717.
Devavrinda, Mudgere Tk. 724.

Dharmadarsis.—Appointment of, for Prince Gulam Mahamed's Charity Fund Committee. 631.

E

Epidemic Diseases Act, 1897.—Permission of pilgrimage to Hedjaz subject to certain precautions. 637, 666.

Epidemic Diseases Regln., 1897.—Certain places removed from the list of infected areas in—
Tumkur Dist. 633.
Shimoga Dist. 535, 566.
Chitaldrug Dist. 578, 584.
Bagavalu in Hole-Narsipur Tk. 566, 585.

———Certain places declared to be infected areas in—
Tumkur Dist. 597, 607, 615, 672, 683, 692.
Mysore Dist. 622, 703.
Shimoga Dist. 535, 566, 634, 693, 703, 733, 738, 746.
Kadur Dist. 734, 738, 746.
Devarayanadurga, Tumkur Tk. 649, 658, 666.
Marasandra, Chiknayakanhalli Tk. 667, 672, 683, 692.
Hassan Town, Hassan Tk. 672, 683, 692.
Gyrahalli, Hassan Tk. 725, 733, 738.
Anapanahalli, Tumkur Tk. 739, 746.

Erratum to Notifn. No. R 6290—L. R. 337-04-3, dated 20th Jan. 1905. 586.
———Do No. 803 -P. W. D. 5101, dated 3rd Aug. 1905. 621.
———Do No. S. 1328—G. R. (4-05)-11, dated 11th Sept. 1905. 659.
———Do No. 3769—L. S. 22-05-2, dated 20th Sept. 1905. 685.
———Do No. 5505—42-4—L. B., dated 23rd and 27th Dec. 1904. 704.
———Do No. R. 2486—Mis. 249-04-3, dated 17th Sept. 1904. 709.
———Do No. J. 1204—A. S. 109-2, dated 30th Oct. 1905. 721.
———Do No. J. 971—C. 84-3, dated 26th Sept. 1905. 721.
———to outturn of selected crops in Mysore for the years 1897-1898 to 1903 and 1904 published as a supplement to the Gazette, dated 3rd Aug. 1905. 653.

Examination.—Directing the substitution of certain Syllabus published with Notifn. No. J. 2798—Pris. 63-04, dated 31st March 1905. 615, 623, 633.
———Requiring all officers and subordinate officers of Jails shall pass the Prisons', 608, 615, 622.
———Holding of the competitive, practical, written, and oral, 698.
———List of candidates declared to have passed the Mysore Local Service Registration, held in Nov. 1905. 749.
———Do do to have been failed in the above. 749.

F

Fair, etc.—Prohibition of attendance of persons to certain, at—
Velanganni, Tanjore Dist. 567.

Fair, etc.—Prohibition of attendance of persons to certain, at—
Nagore, Tanjore Dist. 567.
Maduswaran Hills, Coimbatore Dist. 592, 723.
Gounasamudram, Chitaldrug Dist. 597, 607, 614
Tiruvannamalai, North Arcot Dist. 614, 693.
Sringeri, Kadur Dist. 640, 648, 658.
Sivasamudram, Coimbatore Dist. 648.
Palni, Madura Dist. 657.
Kalganda, South Canara Dist. 673.
Dharmastala, do 673.
Subramanya, do 673.
Kalpathi, Malabar Dist. 673.
Ootacamund, Nilgiri Dist. 693.
Kizhur, Malabar Dist. 712.
Udipi, South Canara Dist. 712.
Ramnathpur, Hassan Dist. 712, 718, 725.
Vaniyambadi, Salem Dist. 713.
Guruvayur, Malabar Dist. 718.
Tirthahalli, Shimoga Dist. 718, 725.
Chidambaram, South Arcot Dist. 719.
Yemmiganur, Bellary Dist. 725.
Denkanakote, Salem Dist. 733.
Trichinopoly and Srirangam, Trichinopoly Dist. 734.
Tiruvallur, Chingleput Dist. 747.
Ghati Subramanya, Dodballapur Tk. 747.
Bhagamandala village in Coorg. 657, 666, 671
Nagalmadike, Pavagada Tk. 747.
Ajmere, Ajmere Dist. 615, 693.
Uchchangamma, Bellary Dist. 649.
Gummalapuram, Salem Dist. 657.
Maligai, Salem Dist. 672.
Kottur, Bellary Dist. 726.
Maroba, do 726.

Fees.—Levying certain, on carts, etc., to the weekly market at Sakrepatna in Kadur Tk. 640.

Forest.—Fixing seigniorage on reserved timber in coffee lands. 565.

Forest Regulation, XI of 1900.—Declaring certain area as State Forest under the,—
571, 598, 599, 600, 602, 608, 610, 616, 617, 644, 661, 674, 676, 708, 713, 722, 729, 740, 750.

Forests.—Prohibition of shooting, etc., in certain in the Heggaddevankote Tk. 629.

G

G. O.—Publication of the extract of, regarding the desirability of Indian Students provided with a certificate of identity. 636.

Resolutions.—Publication of, No. 1-52-5, dated 7th Sept 1905, regarding Emigration. 685.

H

Holidays.—Directing to observe Dasara, from 4th to 16th Oct. 1905. 659.
———Closing all Public Offices, Courts and Schools from Monday the 25th Dec. 1905 to 2nd Jan. 1906 on account of Christmas. 739.

I

Invention.—Specification of, *in re* improvements in or relating to Typographic Machines. 641.

L

Land.—Cancellation regarding acquisition of, in Chamanhalli village, Mandya Tk. 709, 755.

Land Rev. Code —Authorizing under Sec. 236 of the, the extension of provisions of Chapters VIII to X to—
Hulisandra, Tiptur Tk. 562, 580, 637.
Jodi Inam village of the Alwalli, Manjarabad Tk. 653.
Jodi Siragondanahalli, Dodballapur Tk. 714.
Sarvamanya Kogilur village, Yedatore Tk. 731.
———Declaring under Sec. 112 of the, that the assessments imposed under the Revision Survey Settlement of the villages of the Challakere Tk. are fixed for 30 years. 688.
Do late Budihal Tk. 755.

Lands, etc.—Acquisition of certain, for—
Building purposes in Hancha village, Mysore Tk. 653, 660, 669.
Do houses in Sivapura village, Gundlupet Tk. 708, 713, 721.
Do a mantapam in Bellur village, Yedatore Tk. 688, 698, 708.
Constructing Holageri at Saligram, Yedatore Tk. 536.
Do a new Hindu kitchen for travellers' bungalow at Halebid, Belur Tk. 564, 571, 579.
Constructing a forest cattle pound at Byadarahalli, Malvalli Tk. 629.
Do a well for Railway Dept. at Gollapur village, Nelamangala Tk 629 643, 660.
Do a new weir to Rascheruvu tank, Bagepalli Sub-Tk. 714, 721, 729
Erecting a school at Rampur, Koratagere Tk. 563, 570, 579.
Do a plague shed at Hunsur. 649.
Do a Forest Lodge in Channagiri Tk. 669.
Excavating a gravel pit in Nagamangala road, Nagamangala Tk. 645, 653, 660.
Do earth for repairing Chinnamanakere tank, Sidlaghatta Tk. 736, 739, 750.
Do check drains and gravel pits by the side of Peresandra, etc., Chikballapur Tk. 744, 754.
Do Public Works Dept. at Gubbur, Kumsi Sub-Tk. 564, 579.
Extending village site at Dummi, Holalkere Tk. 537.
Do do at Kenchaganahalli. Pavagada Tk. 571, 580.
Do compound of Anglo-Vernacular School at Tumkur. 585, 597, 608, 615.
Do Muthalvadi, T.-Narsipur Tk. 709, 713, 721.
Do do of Mukodlu, Kankanhalli Tk. 731, 736, 739.

Lands, etc.—Acquisition of ce...
Forming a new village of Kacha ... Chikballapur Tk. 537.
Do a Kambalahalli, Gudibanda Sub-Tk. 618, 629, 637.
Do a new village of Mushtur, Mulbagal Tk. 618, 637.
Do a new village site of Mutha, Heggaddevankote Tk. 669, 673, 685.
Do a gravel quarry at Sulibele, Hoskote Tk. 653, 661, 669.
Do do at Talkad, T.-Narsipur Tk. 684.
Do a new village site at Kodagipalli, Bowringpet Tk. 722, 729, 735.
Do a Mahomedan Kabarastan at Hole-Narsipur Tk. 729.
Do a new village in Hosakere, Mulbagal Tk. 735, 739, 750.
Do a sewage form in connection with the drainage of Chamarajpet, Bangalore Tk. 740.
Widening the Kumbarkere road of Siralkoppa Shikarpur Tk. 637.
Do the road in front of Ganganna Setty's house at Settikere, Chiknayakanhalli Tk. 643.
Building new houses in Mavatur village, Tumkur Tk. 563, 569.
Constructing waste-weir of Byrandahalli tank in Seethi village, Kolar Tk. 538, 568.
Do travellers' bungalow in Chelur, Bagepalli Tk. 570, 579.
Do a septic tank at Malleswaram Extension, Bangalore Tk. 684.
Deviation of a road in Honakere, Nagamangala Tk. 538, 569.
Do of the Mysore-Belagula road, Seringapatam Tk. 572, 580, 585.
Erecting houses in Sravandahalli, Maddagiri Tk. 563, 568.
Extending the village site of Tumkur Town. 592.
Do Rampur channel, Nanjangud Tk. 603, 611, 619.
Do the Durgigudi in Shimoga Town. 667.
Do the chattram compound at Harihar, Chitaldrug Dist. 696.
Do the Pitchapalli village, Bowringpet Tk. 696.
Do roads in 3rd Division, Bangalore City. 704.
Improving the sanitation in Mysore City. 673.
Including in the bed of Venkatesa Sagara tank. 755.
Location of Patnulpet people of Bangalore City. 632.
Laying sewer pipe line in Chamrajpet, Bangalore Tk. 705.
Opening out roads, etc., in the village of Janakonda, Chitaldrug Tk. 593, 694.
Do conservancy lanes in Shimoga Town. 626.
Do roads in Chitaldrug Munly. 634, 727.
Do a cart-track at Honnapur, Shimoga Tk. 643, 652, 660.
Do do at Kallur village, Nagar Tk. 643, 652, 659.

Land, etc. Acquisition of certain, for—
Opening a nala in Devanhalli Munly. 736, 740, 750.
Restoring the Kittur Anikat and channel in the Belur Tk. 686, 699, 706.
Shifting the village Mayasandra in the Turuvekre Sub-Tk. 668.
Widening the main drain in Bangalore City, Bangalore Tk 633.
Do the road leading to the Cauvery river at Talkad, T.-Narsipur Tk. 685.
Local Boards Reglu.—Appointment of a Panchayatdar under the, for—
Begur Union. 654.
Bethamangala Union. 704.
———Appointment of Panchayatdars under the, for—
Boodikote and Bethamangala, Bowringpet Tk. 567.
Bellur Union. 587.
———Appointment of Vice-President under the, for—Kadur District Board, 680.
———Appointment of a member under the, for—
Honnali Tk. Board, 536.
Hoskote do 587.
Tirthahalli do 587.
Pavagada do 595.
Kadur Dist. Board, 646.
Mysore Tk. Board, 646.
Kolar Town. 654.
Gudibanda. 654.
Mysore Tk. Board. 659.
Bowringpet do 681, 704.
Mulbagal do 704.
Chitaldrug do 715.
Chikballapur do 623.
Goribidnur do 623.
Bagepalli do 623.
Malur do 623.
Chintamani do 623.
Kolar do 680.
———List of Ex-officio members under the, for—
Chikballapur Tk. Board. 623, 624.
Goribidnur do 624.
Bagepalli do 624.
Malur do 624, 625.
Srinivaspur do 625.
Chintamani do 625.
Chitaldrug do 719.
Challakere do 719.
Hiriyur do 719.
Holalkere do 719.
Davangere do 719.
Jagalur do 719.
Molakalmuru do 719.
———Converting the villages of Agara, Tayalur and Nangali in Mulbagal Tk. into Village Unions under the, 704.

M

Munl. Members.—Appointment of, for the Munly. of—
Hiriyur. 536.
Honnali. 578, 749.
Mysore City. 578.
Goribidnur. 578.
Chitaldrug. 638.
Chikmagalur. 665.
Bangalore City. 680.
Munl. Members.—Appointment of, for the Munly. of—
Nanjangud. 696.
Mulbagal. 696.
Nyamti. 715.
Harihar. 720.
Kallurkatte. 721.
Gubbi. 721.
Tyamagondla. 756.
Anekal Town. 756.
Vadigenahalli Town. 756.
———Re-appointment of, for the Munl. of—
Chamrajnagar. 605.
Mysore City. 737.
Dodballapur. 739.

O

Office.—Opening of a combined Post and Telegraph, at—
Devanhalli. 667.
Sira. 747.

P

Papers.—List of, placed at the disposal of the Press. 636, 649, 697, 748.
Petition Box.—Notice of clearance of the, at the office of the Genl. and Revenue Secretariat. 565, 573, 580, 588, 596, 605, 613, 621, 630, 639, 647, 655, 665, 670, 681, 691, 702, 715, 711, 724, 732, 737, 745, 757.
Pilgrims—Notice to, desiring to visit Mecca this year should be in Bombay not later than 25th December. 747.
Public Works.—Re-constitution of Marikanave works into a Division and all correspondence should in future be addressed to "Exec. Engineer," Marikanave Division. 631.

R

Railways.—Sanctioning the adoption on the Bangalore-Nanjangud and Birur-Shimoga Railways of Rule 72A and amended Rules 101 and 269 of Part I of the General Rules of 1895, for working of open lines of, in British India. 573, 581, 588.
———Authorizing Haffield, Mr. R. E., his Assistants, servants and workmen to make survey of a line from Palakodu to Bangalore. 702, 716, 711.
Rules—for the regulation of water-supply and for house-connections from the waterworks of the Chitaldrug town. 720, 726, 734.

S

Shekdari Scheme.—Reconstitution of Hoblis in persuance of the, in—
Tumkur District. 539.
Shimoga District. 754.
Sheristadar of Hole-Narsipur Tk. to be in charge of the Tk. 537.
———of Magadi Tk. to be in charge of the Tk. 586.
Tree.—Notice of describing and classifying certain, as a reserved one. 580.
Travellers' Bungalow.—Converting, to 1st and 2nd class at Malvalli and Somanhalli. 721.
———Closing of, to the public at Gersoppa falls. 747.

V

Village.—Changing the name of Chavara, Heggaddevankote Tk., into Chamalapura. 736, 740, 750.

778

The Mysore Gazette

Vol. 41.] PUBLISHED BY AUTHORITY. [No. 25.

BANGALORE, THURSDAY, JUNE 21, 1906.

☞ Separate paging is given to the Parts in order that they may be filed as distinct compilations.

CONTENTS.

PART I —Notifications by the Government of His Highness the Maharaja of Mysore.

PART II —Notifications by the Government of India ; The Hon'ble the Resident in Mysore ; Chief Judge ; Survey and Inam Superintendent ; Comptroller ; Chief Engineer ; Mysore State Railway ; Amrut Mahal Department ; Inspector-General of Registration ; Senior Surgeon ; District and Sessions Judges ; Sub-Judges ; Deputy Commissioners of Districts ; Forest Officers ; Presidents, Bangalore and Mysore City Municipalities ; Season Reports ; Mortuary and Meteorological Statements ; Postal Notices ; Civil and Military Station Notifications, &c.

PART III.—Legislative Measures and Rules thereunder.

PART IV.—Official Papers.

PART I.

Notifications by the Government of His Highness the Maharaja of Mysore.

GENERAL AND REVENUE.

No. 12978—*San.* (7-05)-163, *dated* 21*st June* 1906.

The following notification of the Madras Government received with No. 672 P., dated the 14th June 1906, from the Hon'ble the Resident in Mysore, is republished for general information :—

Whereas His Excellency the Governor in Council is satisfied that there is danger of an outbreak of plague at Rameswaram in the Ramnad Division of the Madura District, if persons from the Bellary and the Nilgiri Districts, Karamadai and Mettupalaiyam in the Coimbatore District, the Hosur Taluk of the Salem District, the Tiruvannamalai Taluk of the South Arcot District, the Tellicherry and Mangalore Municipalities, the Mysore State and other parts declared to be infected with plague are permitted to visit that place on the occasion of the ensuing Adi Amavasai and car festival :

In exercise of the powers delegated to him under the Epidemic Diseases Act, 1897, His Excellency in Council prohibits the attendance at the said festival, from the 1st to the 10th July 1906, inclusive, of persons from the said parts, and further directs that between the 25th June and the 9th July, inclusive, no tickets to travel by Railway shall be sold within the Bellary District and at the Railway Stations of Gudupalli, Kuppam, Mulanur, Patchur, Karaimadai, Mettupalaiyam, Ettakot, Mahe and Tellicherry on the Madras Railway and of Tiruvannamalai, Agaram, Sibbandi and Tandari on the South Indian Railway and at the Stations on the Nilgiri Railway, for the Station of Madura on the South Indian Railway and the Stations of Madura East, Silaiman, Tiruppuvanam, Tirupachetti, Mannamadura, Partibanur Road, Paramakudi, Pandinanmoi, Sattirrakkudi, Ramnad, Valantaravai, Uchippuli and Mantapam on the Madura-Pamban Railway to any person intending or believed to be intending to be present.

All persons proceeding to the said festival in contravention of this notification will be turned back.

No. G. 6230, dated 20th June 1906.

The following List of Papers placed at the disposal of the Press is published for general information :—

Serial No.	No. and date of Proceedings	Subject
1	G. O. No. R. 14084-5—Agri. 101-05-32, dated 1st May 1906.	Sanctions, as an exceptional measure, the remission of half the assessment for 1905-06 in the case of such lands in the Tumkur District, classed as "rice" under tanks, as owing to the absence or failure of water-supply in the tanks, either lay waste during both the seasons (Kartika and Vaisakha) of the year, or yielded a crop of 4 annas and under in either of these seasons; and directs that in the case of dry lands the collection of khists in certain tracts be made in four or six instalments, according to the requirements of each tract, beginning from 1st May 1906.
2	R. 14223-31—L. R. 457-05-4, dated 7th May 1906.	Cancels the Revenue Commissioner's order granting permission to one Timmarajiah of Chintamani town, to build a house on S. No. 9 of the Chintamani village, on the ground that the case comes under clause (2) of Section 63 of the Land Revenue Code, as there is a clear finding of the Deputy Commissioner that the building is not one required for *bonâ fide* agricultural purposes.
3	Fl. 5324—B. 26-05-5, dated 5th March 1906.	Report on the working of the Mysore State Life Insurance Scheme for the year ending June 1905.
4	Fl. 8190-235—S.&A. 620-05-2, dated 26th May 1906.	Cancelling the rule *re* the grant of privilege leave preparatory to retirement.
5	10235-48—Ml. (625-04)-17, dated 2nd April 1906.	States that Government are not in favor of disturbing the existing practice of levying Octroi duty on piece-goods after they are examined with reference to the price lists produced by the merchants, and that the matter may be left to the discretion of the Municipal Boards themselves.
6	G. 5196-236—G.M. 12-05-10, dated 23rd April 1906.	Passing orders in the matter of the claims of Gudigar Subbanna and others for value of articles supplied to the Delhi Exhibition, and laying down instructions for the guidance of officers entrusted with the collection of exhibits.
7	G. 5417-9—G. M. 113-05-2, dated 4th May 1906.	Sanctioning certain rules for the grant of post-graduate scholarships to selected students for advanced Scientific Research and Technical Education from the Damodar Dass Charities Fund.
8	G. 5725-64—G. M. 14-05-1, dated 19th May 1906.	States that the fifth Triennial Election of members for the Dasara Representative Assembly will come off in 1906, and prescribes the Dasara Calendar for that year.
9	A.—Gl. Fin. 16-05-06, dated 3rd June 1906.	Passing orders in regard to the retention in service or retirement of officers who have or are about to become superannuated.
10	4174—Muz. F. 10-02, dated 25th Mar. 1906.	Sanctioning the revival of the car festival of the Sri Sripatiswaraswami temple on the Seethi Hill in the Kolar Town, and the holding of a cattle fair, etc., on the occasion at the foot of the hill.
11	4177-81—Muz. F. 6-94, dated 26th Mar. 1906.	Passing orders regarding the alienation of Survey No. 123, an Inam endowed to Sri Narasimhaswami temple at Vighna Sante in the Tiptur Taluk.
12	4202-3—Muz. F. 10-A of 1895, dated 27th Mar. 1906.	Passing orders regarding the restoration of the Inam village of Thammagondanahalli in the Koratagere Sub-Taluk, to Haveri Jayaramachar, the enjoyer of the said village.

Serial No.	No. and date of Proceedings	Subject
13	4213-14—Muz. F. 36 of 93, dated 28th Mar. 1906.	Exempting the Swamigalu of the Sri Sivaganga Matt from furnishing details of the expenditure of the amounts paid for Nitya Katle and Hechu Katle expenses of the Matt.
14	4221-4—Muz. F. 25-92, dated 28th Mar. 1906.	Passing orders regarding the revision and improvement of the pay of the pandits of the Sri Chamarajendra Sanskrit College, Bangalore, and of His Highness the Maharaja's Sanskrit College, Mysore.
15	4236-8—Muz. F. 64-92, dated 28th Mar. 1906.	Accepting the offer of Hotte Ranganna and others of Mysore to take over under Government management certain properties left by their ancestors for charitable purposes and also sanctioning the addition of the Kunchigars' Chattram at Nanjangud to the Government Chattram building at the place.
16	4267-72—Muz. F. 55-01, dated 28th Mar. 1906.	Passing orders regarding the recognition of the succession of the Swamigalu of Sri Ahobala Matt at Tiruvallur in the Chingleput District and the restoration of the Matt endowments situated in the Mysore State.
17	4367-72—Muz. F. 32-95, dated 2nd April 1906.	Fixing the scale of establishment and other charges of the Chamarajendra Sanskrit College, Bangalore.
18	4498-509—Muz. F. 5-03, dated 7th April 1906.	Passing orders regarding the alienation of a house and hittalu belonging to the Sri Anjaneyaswami temple at Kaniyur in the Arkalgud Taluk.
19	4510-21—Muz. F. 41-98, dated 7th April 1906.	Passing orders on the petition of Shanbhog Nanjappa of Sugganahalli in the Magadi Taluk, in regard to the enhancement of assessment payable on a land belonging to the Sri Narasimhaswami temple at the place by one Srinivasaraghavachar.
20	5114-17, dated 8th May 1906.	Sanctioning an additional tasdik of Rs. 15 per mensem to the Sri Byatarayaswami temple (otherwise known as the Srinivasa Mandiram) in the Bangalore City.
21	5119-22, dated 8th May 1906.	Sanctioning a monthly cash tasdik of Rs. 40 to the Chamundeswari temple on the bank of the Kapila river at Nanjangud.

No. 12927—*L. B.* (476-05)-3, *dated* 19*th June* 1906.

Under Section 6 of the Land Acquisition Regulation, No. VII of 1894, it is hereby declared that the undermentioned vacant sites are required for a public purpose, *viz.*, for laying out a road in the west of Thoregeri in the Sosale Union, T.-Narsipur Taluk in the Mysore District :—

No.	Name of owner	Description of site	Total extent acquired			Kandayam	Boundaries			
			Dimensions in feet		Total					
			E. to W.	N. to S.			East	West	North	South
						Rs. a. p.				
1	Chick Racha ...	Vacant ...	22	25	550	0 8 0	Lane .	Narayan Jois' wet land.	Davare Putta's site.	Bundave Linga's site.
2	Davare Puttanna Sidda	Do ...	15	45	615	0 8 0	Lane...	Doddamallanna's kotige site.	Mujarani Mada's kotige site	Bhysajana kotige site

No. R. 15556—*L. R.* 528-05-4, *dated 6th June* 1906.

Under Section 6 of the Land Acquisition Regulation, No. VII of 1894, it is hereby declared that the lands described hereunder are required for a public purpose, *viz.*, for excavating a feeder channel to the Oomathur tank and for throwing bank to protect the Dasanur village tank, and under Sections 7 and 3 (*c*) of the said Regulation, the Assistant Commissioner in charge of the Nanjangud group of taluks is authorised to take order for the acquisition of the said lands:—

District	Taluk	Hobli	Village	Name of khatedar	Survey No.	Total extent	Kharab	Remaining extent	Assessment	Extent now required		Boundaries			
										Extent	Assessment	East	West	North	South
						A. g.	A. g.	A. g.	Rs. a. p.	A. g.	Rs. a. p.				
Mysore	Nanjangud	Dettakowlande	Dasanur	Mallegowda and others ...	257	5 11	0 11	5 0	6 8 0	1 3	1 4 6	No. 251 and voni ...	No. 251 ...	No. 311 and halla ...	Voni.
				Puttegowda and others ...	303	3 6	0 2	3 4	3 8 0	0 37	1 1 6	No. 303 ...	No. 303 ..	No. 304 ...	No. 299.
				Do	304	4 6	...	4 6	5 0 0	0 31	0 14 8	No. 304 ...	No. 304 ...	No. 305 ...	No. 303.
				Chikadesaraje Urs	290	20 3	0 13	19 30	27 0 0	1 14	1 14 0	No. 290 ...	No. 290 ...	No. 297 ...	Oomathur gadi.
				Hutchasetti	297	2 27	...	2 27	2 12 0	0 19	0 8 0	No. 297 ...	No. 297 ..	No. 298	No. 290.
				Krishnasetti	298	2 2	...	2 2	2 4 0	0 20	0 8 6	No. 298 ...	No. 298 ...	No. 299 ...	No. 297.
				Mallegowda and others ..	299	3 24	...	3 24	4 8 0	0 19	0 9 0	No. 299 ...	No. 299 ..	No. 302 ...	No. 298.
				Subbegowda	248	1 36	...	1 36	2 12 0	0 8	0 2 11	Halla ...	No. 248 ..	Halla ...	No. 249.
				Mallegowda and others ...	249	6 11	...	6 11	8 0 0	0 3	0 1 6	Do ...	No. 249 ...	Halla ...	No. 252.
				Do	252	3 30	...	3 30	4 8 0	0 4	0 1 11	No. 252 ...	No. 252 ..	No. 252 and halla ...	No. 252.
				Subbegowda and others ...	256	3 0	...	3 0	4 8 0	0 13	0 7 8	No. 257 ...	No. 256 ...	Nos. 312 and 313 and halla	No. 256.
				Do	311	5 15	0 2	5 13	7 8 0	0 3	0 1 7	No. 311 ..	No. 311 ...	No. 311 ...	Halla.
				Mallegowda and others ...	313	11	0 11	4 0	4 8 0	0 17	0 8 0	No. 256 ...	No. 313 ...	No. 313 ...	No. 313.
				Total ...		65 22	0 39	64 23	83 4 0	6 31	8 3 9				

781

No. J. 3540—*Legis.* 32-05 2, *dated* 20*th June* 1906.

Notification No. 6796, dated 23rd November 1905, from the Government of India, Department of Commerce and Industry :—

"In exercise of the power conferred by Section 19 of the Sea Customs Act, 1878 (VIII of 1878), the Governor-General in Council is pleased to prohibit the bringing into British India by sea or by land of dies stamped or engraved with the device of coin, as defined by Section 230 of the Indian Penal Code (Act XLV of 1860, as amended by Act XIX of 1872), or with any colourable imitation of such device."

No. R. 15553—*R. M.* 611-05-2, *dated* 6*th June* 1906.

Under Section 6 of the Land Acquisition Regulation, No. VII of 1894, it is hereby declared that the land described hereunder is required for a public purpose, *viz.*, for extending the village site; and under Sections 7 and 3 (*c*) of the said Regulation, the Assistant Commissioner in charge of the Tarikere group of taluks is authorized to take order for the acquisition of the said land:—

District—Kadur.
Taluk—Tarikere.
Hobli—Amrutapura.
Village—Lakshmisagara.
Name of khatedar—Marulaiya *bin* Rudraiya.
Survey No.—4.
Dry, wet or garden—Dry.
Total extent—13 acres and 19 guntas.
Assessment—Rs. 18.
Extent now required—39 guntas.
Boundaries—
East—Cattle track in Survey No.
West—Survey No. 23.
North—Village site already acquired out of Survey No. 4.
South— Do No. 5.

No. R. 15555—*R. M.* 534-05-5, *dated* 6*th June* 1906.

Under Section 6 of the Land Acquisition Regulation, No. VII of 1894, it is hereby declared that the lands described hereunder are required for a public purpose, *viz.*, for inclusion in the bed of the Mavathur tank; and under Sections 7 and 3 (*c*) of the said Regulation, the Assistant Commissioner in charge of Maddagiri group of taluks is authorized to take order for the acquisition of the said lands:—

District	Taluk	Hobli	Name of khatedar	Survey No.	Dry, wet or garden	Extent now required		Boundaries			
						Extent		East	West	North	South
Tumkur	Kolala	Siraganahalli	1 Srikantiah, son of Subba Sastri ½. 2. Subbarayappa, son of Krishna Sastri ¼. 3. Venkatnaranappa, brother of Nanjunda Sastri ⅓. 4. Nanjunda Sastri ⅛ ...	...	Dry	A. g. 105 23		Bevinhalli and Golhalli village boundary, Doddballapur Taluk	Remaining portion of Siraganahalli village.	Mavathur.	Huraligere.

Notification No. Fl. 8456—*S. & A.* 620-05-3, *dated Mysore,* 7*th June* 1906.

The following Order of the Government of His Highness the Maharaja is published for general information :—

Proceedings of the Government of His Highness the Maharaja of Mysore.

READ—

Letter No. 5434, dated the 30th March 1906, from the Comptroller to the Government of His Highness the Maharaja of Mysore, stating that the rule permitting the grant of privilege leave preparatory to retirement is in force in Mysore only, that in British India privilege leave is not given preparatory to retirement because it is allowed to an officer to give him some respite from work, and an officer who is allowed to retire from service and is relieved of work for the rest of his life does not stand in need of any such respite and cannot claim leave on full pay under the Regulations, and suggesting that the existing rule permitting the grant of privilege leave preparatory to retirement may be withdrawn.

Government Order No. 15097-136—P. & A. 1396, dated the 20th April 1903, directing that such privilege leave as an officer may be entitled to at the time of his retirement be granted to him preparatory to his retirement from the service.

No. FL. 8190-235—S. & A. 620-05-2, DATED THE 26TH MAY 1906.

ORDER THEREON.—The Government agree with the Comptroller that the grant of privilege leave preparatory to retirement as a matter of course in all cases is objectionable in principle and inconsistent with the spirit of the Mysore Service Regulations. Privilege leave is given to enable an officer to have some respite from work and to recoup his health and strength so that he may on return from leave perform his duties efficiently, and is evidently uncalled for in the case of an officer who retires.

2. Order No. 15097-136—P. & A. 1396, dated the 20th April 1903, which created the innovation, is accordingly cancelled and the Comptrolleris requested to issue a correction to the Mysore Service Regulations cancelling the rule in question.

3. As, however, the sudden withdrawal of an existing concession without previous notice is likely to cause hardship, this order will not be applied to those who retire this year from the 1st July 1906.

(Signed) B. K. VENKATA VARADA IYENGAR,
Secretary.

No. R. 15658—*L. R.* 703-05-3, *dated 9th June* 1906.

Under Section 6 of the Land Acquisition Regulation, No. VII of 1894, it is hereby declared that the land described hereunder is required for a public purpose, *viz.*, for the extension of the village site of Ganiga village, Mandya Taluk; and under Sections 7 and 3 (*c*) of the said Regulation, the Assistant Commissioner in charge of the French Rocks group of taluks is authorized to take order for the acquisition of the said land :—

District—Mysore.
Taluk—Mandya.
Hobli—Basaralu.
Village—Ganiga.
Name of khatedar—Kempa, Kada—Joint khatedars.
Survey No.—$\frac{1}{1}$.
Dry, wet or garden—Dry.
Total extent—6 acres and 17 guntas.
Assessment—Rs. 4-0-0.
Extent now required—2 acres.
Boundaries—
East—Part of Survey No. 1 and Survey No. 49.
West—Part of Survey No. 1.
North—Portion of Survey No. 1.
South—Lane and Gramathana.

No. R. 15863—*L. R.* 704-05-3, *dated 14th June* 1906.

Under Section 6 of the Land Acquisition Regulation, No. VII of 1894, it is hereby declared that the lands described hereunder are required for a public purpose, *viz.*, for extending the village of Harihara in the Malvalli Taluk of the Mysore District; and under Sections 7 and 3 (*c*) of the said Regulation, the Assistant Commissioner in charge of the French Rocks group of taluks is authorized to take order for the acquisition of the said lands :—

District—Mysore.
Taluk—Malvalli.
Hobli—Halgur.
Village—Harihara.
Names of khatedars—1. Puttasamaiya, 2. Honnappa, 3. Ramaiya.
Survey No.—241.
Dry wet or garden—Dry.
Total extent—7 acres and 14 guntas.
Assessment—Rs. 4.
Extent now required—
Extent—1 acre.
Assessment—Annas 9.
Boundaries—
East—Survey No. 1, Marigowda *bin* Marigowda.
West—Survey No. 231, Puttasamaiya, Ramaiya and Honnappa.
North—Survey No. 241, Puttasamaiya, Ramaiya and Honnappa.
South—Village site.

No. R. 15921—*L. R.* 715-05-3, *dated 16th June* 1906.

Under Section 6 of the Land Acquisition Regulation, No. VII of 1894, it is hereby declared that the land described hereunder is required for a public purpose, *viz.*, for extending the village site of Hebbalguppe village, Heggaddevankote Taluk; and under Sections 7 and 3 (*c*) of the said Regulation, the Assistant Commissioner in charge of the Hunsur group of taluks is authorized to take order for the acquisition of the said land :—

District—Mysore.
Taluk—Heggaddevankote.
Hobli— Do
Village—Hebbalguppe.
Name of khatedar—Chikka.
Survey No.—67.
Total extent—3 acres and 35 guntas.
Assessment—Rs. 4.
Extent now required—
Extent—3 acres and 35 guntas.
Boundaries—
East Hebbalguppe village.
West—Survey No. 68.
North— Do No. 69.
South— Do No. 66.

No. G. 6241—G. M. 129-05-8, dated 21st June 1906.

All Offices, Schools, Courts and other public institutions in the State will be closed on Friday the 29th June 1906, in celebration of the Birthday of His Majesty the King-Emperor of India, instead of on the 26th instant.

CIVIL APPOINTMENTS.

Heads of Departments and all other officers concerned are informed that Notifications in the Gazette are in future to be accepted as disposing of all references regarding leave, transfers, appointments, powers and other personal questions affecting Gazetted officers, as to which orders are gazetted by the Government in this Part of the Gazette, and that any subsidiary orders as to relief of their subordinates and the like, which such notifications necessitate, must be issued by them on receipt of the Gazette, as no other orders will be issued by Government.

No. 12909—*Med.* (22-05)-6, *dated* 19*th June* 1906.

Mr. A. Kodandapany Mudaliar, Sub-Assistant Surgeon, is granted extraordinary leave without allowances for another year in extension of the one year and ten months' leave of the same kind granted to him in Notification Nos. 870—Med. (22-05)-2 and 5928—Med. (22-05)-4, dated respectively the 19th—21st July and 4th—5th December 1905.

No. R. 15836—*L. R.* 637-05-6, *dated* 14*th June* 1906.

The fifteen days' privilege leave granted to Mahomed Peer, Deputy Amildar of Harihar, in Notification No. R. 15377—L. R. 637-05-4, dated the 30th May 1906, is extended by fifteen days.

No. R. 15826—*L. R.* 202-05-8, *dated* 14*th June* 1906.

The privilege leave for thirty-one days granted to Mr. S. Krishnappa, Amildar of Sorab, in Notifications ending with No. 15376—L. R. 202-05-06, dated the 30th May 1906, is extended by fifteen days.

No. Fl. 8648—*S. R.* 74-05-9, *dated* 16*th June* 1906.

The furlough for three months granted in combination with privilege leave for three months, to Mr. G. Dunning, Extra Assistant Commissioner, Excise Department, in Notification No. Fl. 6211—S. R. 74-05-7, dated the 21st March 1906, is extended by three months, under Article 165A of the Mysore Service Regulations.

No. R. 15951—*Ft.* 185-05-4, *dated* 18*th June* 1906.

The fifteen days' privilege leave of absence granted to Mr. P. S. Govinda Rao, Sub-Assistant Conservator of Forests, Shimoga District, in Government Notification No. R. 13500—Ft. 185-05-2, dated the 20th April 1906, is hereby extended by seven days.

No. Fl. 8682—*Pris.* 24-05-11, *dated* 18*th June* 1906.

Under Articles 188 and 165A of the Mysore Service Regulations, Mr. G. Hume Wright, Superintendent of the Bangalore Central Jail, is granted three months' privilege leave combined with three months' leave on medical certificate, with effect from the 18th June 1906, or the other date from which he may avail himself of the same.

2. Mr. P. S. Atchyuta Rao, Civil Surgeon, Mysore, and Superintendent of the Mysore Jail, is appointed to act as Superintendent of the Central Jail, Bangalore, during the absence of Mr. Hume Wright on leave or until further orders.

3. Mr. T. S. Nanjappa, Personal Assistant to the Senior Surgeon, is appointed to act as Civil Surgeon and Superintendent of the Jail, Mysore, during Mr. Atchyuta Rao's employment as Superintendent of the Central Jail, Bangalore, or until further orders.

4. Dr. S. V. Ramaswamy Iyengar, Oculist, is appointed to act as Personal Assistant to the Senior Surgeon, in addition to his own duties, during the absence of Mr. Nanjappa on the above employment or until further orders.

No. R. 16119—*L. R.* 26-05-9, *dated* 21*st June* 1906.

Under Article 188 of the Mysore Service Regulations. Mr. D. Devaraj Urs, Deputy Commissioner, is granted privilege leave of absence for two months and seven days, with effect from the date on which he avails himself of the same.

No. J., dated 16*th June* 1906.

Whereas Section 4 of Regulation I of 1884 requires that the Chief Court of Mysore shall consist of at least three Judges, His Highness the Maharaja is pleased to appoint Mr. A. Rangaswamiengar, B.A., B.L., to be one of the Judges of the said Court till such time as Rao Bahadur P. S. Krishna Rao, B.A., B.L., enters on his duties as a Judge of that Court.

2. Mr. Rangaswamiengar will continue to perform the duties of Revenue Commissioner in addition to those of a Judge of the Chief Court during the interval aforesaid.

No. J. 3497—*Police* 195-05-1, *dated* 15*th June* 1906.

To fill up the vacancies caused by the retirements of Mr. Mahomed Jaffer, Superintendent of Police, and Mr. Gulam Mohadin Khan, Assistant Superintendent of Police, and the reversion of Mr. Vedantadesigam Iyengar from the Police to the Revenue Department, with effect from the 1st July 1906, the following Amildars are appointed Assistant Superintendents of Police, 2nd class :—

1. Mr. B. S. Ranoji Rao.
2. „ S. Narayana Rao.
3. „ P. Visvanatha Rao.

No. J. 3514—*Cts.* 283-05-4, *dated* 18*th June* 1906.

His Highness the Maharaja is pleased to appoint Rao Bahadur P. S. Krishna Rao, B.A., B.L., as Puisne Judge of the Chief Court of Mysore, with effect from the 18th June 1906, to fill the vacancy caused by the appointment of Mr. A. Rangaswamiengar as Revenue Commissioner of Mysore.

No. G. 6202—*G. M.* 300-05-2, *dated* 18—18*th June* 1906.

The Government of His Highness the Maharaja are pleased to make the following appointments in the General and Revenue Secretariat :—

1. Mr. K. S. Chandrasekhara Aiyar, B.A., B.L., Deputy Secretary, to be Secretary to the Government of His Highness the Maharaja of Mysore in the General and Revenue Department, *vice* Mr. B. K. Venkata Varada Iyengar, granted privilege leave preparatory to retirement, with effect from the afternoon of the 3rd June 1906, when the former assumed charge of the office of Secretary.

2. The following officers to be Under-Secretaries to Government :—

(i) Mr. C. S. Balasundram Iyer, B.A., Assistant Commissioner and 1st Class Magistrate, Bangalore City, to be attached to the Dewan for duty. (To join forthwith.)

(ii) Mr. K. Mathan, B.A., Assistant Commissioner, Shimoga District. (To join on relief.)

(iii) Mr. P. G. D'Souza, B.A., B.L., Assistant Secretary to Government, General and Revenue Department.

No. 12906—*Ml.* (588-05)-2, *dated* 18*th June* 1906.

The appointment of a whole-time President for the Bangalore City Municipal Commission, sanctioned in Government Order No. 4274-6—L. F. 113-03, dated 9th May 1904, having been ordered to be abolished with effect from the 1st July 1906, the Government of His Highness the Maharaja are pleased to order the following arrangements for the charge of the Municipality with effect from the same date :—

(i) The Deputy Commissioner of the Bangalore District to be *ex-officio* President.

(ii) Mr. M. G. Krishnasami Rao, appointed an acting Extra Assistant Commissioner, *sub pro tem*, by a separate Notification, to be Vice-President.

No. 12907—*Med.* (291-05)-2, *dated* 18*th June* 1906.

The following appointments of Sub-Assistant Surgeons of the 3rd class are ordered :—

(1) Mr. V. Venugopal Naidu, B.A., M.B.&C.M.,
and (2) Mr. C. Rajagopal Mudaliar, B.A., M.B.&C.M.

No. J. 3525—*Police, dated* 18*th June* 1906.

The following promotions and confirmations in the Police Department are ordered :—

(1) Mr. Zahiruddin Maccai, from the 2nd to the 1st class of Superintendents, with effect from the date of Mr. Nagar Subba Rao's transfer to the Revenue Department.

(2) Mr. Nadig Subba Rao, from Assistant Superintendent of Police, 2nd class, to Assistant Superintendent, 1st class, with effect from the date of Mr. C. D. Ramaswamiah's retirement, and from Assistant Superintendent of Police, 1st class, to Superintendent of Police, 2nd class, with effect from the date of Mr. Zahiruddin Maccai's promotion to the 1st class of Superintendents.

(3) Mr. T. F. Wilkinson, acting Assistant Superintendent of Police, 2nd class, is confirmed in that class, with effect from Mr. Nadig Subba Rao's promotion as Superintendent, 2nd class.

No. R. 16024—*L. R.* 600-05-3, *dated* 18*th June* 1906.

Mr. K. Subba Rao, B.A., Manager, Revenue Commissioner's Office, is appointed an Extra Assistant Commissioner of the last class, and is deputed for duty as an additional Assistant to the Revenue Commissioner and *ex-officio* Director of Statistics.

No. R. 16029—*L. R.* 504-05-7, *dated* 18*th June* 1906.

Mr. H. Ramanujiengar, Deputy Commissioner, 3rd class, is promoted to the 2nd class, with effect from the 30th March 1906, the date of Mr. K. P. Puttanna Chetty's appointment as Councillor.

No. R. 16015—*L. R.* 248-05-8, *dated* 18*th June* 1906.

Mr. A. Mrityunjaya Iyer, B.A., acting Amildar of the Kolar Taluk, is appointed an Extra Assistant Commissioner of the last class, with effect from the 1st July 1906. He will be attached to the Excise Commissioner as his Office Assistant in the place of Mr. N. Gopaliengar, retired.

No. R. 16036—*L. R.* 723-05-1, *dated* 18*th June* 1906.

The following confirmations and appointments of Amildars and Deputy Amildars are ordered with effect from the 1st July 1906:—

1. *Amildars.*

1. Mr. V. Gopala Row, Police Inspector, and acting Amildar.
2. Mr. D. Narasinga Row, Head Clerk, Deputy Commissioner's office, Mysore, and acting Amildar.
3. Mr. T. Venkatramaiya, B.A., Head Clerk, Deputy Commissioner's office, Kolar, and *sub pro tem* Amildar.
4. Mr. N. Ramaswamiengar, Head Clerk, Deputy Commissioner's office, and acting District Sheristadar, Hassan.
5. Mr. F. S. Raghavachar, District Sheristadar, Kadur, and *sub pro tem* Amildar.
6. Mr. K. Srinivasa Row, B.A., Head Clerk, Revenue Commissioner's office and acting Amildar.
7. Mr. V. S. Rajagopalachar, Head-quarter Inspector of Police and sometime acting Amildar.
8. Mr. K. Hanumantha Row, Deputy Amildar and *sub pro tem* Amildar.
9. Mr. Gulam Mahomed Maccai, Deputy Amildar.
10. Mr. G. Narayan Row, Deputy Amildar.
11. Mr. Sheik Abdulla, Deputy Amildar and *sub pro tem* Amildar.
12. Mr. C. R. Narayansami Mudaliar, Deputy Amildar and acting Amildar.
13. Mr. K. Kesavachar, B.A., B.L., Deputy Amildar.
14. Mr. S. N. Appanniengar, B.A., B.L., Revenue Probationer.
15. Mr. C. Gopalachari, B.A., District Sheristadar, Tumkur, and acting Amildar.

2. *Deputy Amildars.*

1. S. Srinivasiengar, Head-quarter Inspector of Police, and acting Deputy Amildar.
2. G. Murudappa, Police Inspector.
3. S. Anantaramiengar, Head Clerk, Forest Conservator's office.
4. H. Basavaraj Urs, Clerk, General and Revenue Secretariat, and *sub pro tem* Deputy Amildar.
5. K. A. Ranganna, Taluk Sheristadar.
6. Mahomed Peer, B.A., Clerk, General and Revenue Secretariat, and *sub pro tem* Deputy Amildar.

No. R. 16032—*L. R.* 724-05-1, *dated* 18*th June* 1906.

1. The following officers are confirmed as Extra Assistant Commissioners:—
   (i) Mr. A. Vedantadesigam Iyengar.
   (ii) „ R. T. Mahadeva Rao.
   (iii) „ T. K. Sundararajiengar.
   (iv) „ K. Mylari Rao, B.A., B.L.
   (v) „ Ananda Rao Sirsi, B.A., LL.B.
   (vi) „ H. Sitaramaiya.

2. The following Amildars are appointed to act as Extra Assistant Commissioners, *sub pro tem.*
   (i) Mr. Mahomed Raza.
   (ii) „ G. Hanumantha Rao.
   (iii) „ M. G. Krishnaswami Rao.

3. The following postings and transfers of Assistant and Extra Assistant Commissioners are ordered:—
   (i) Mr. V. R. Tyagarja Iyer, from Kolar to Bangalore as Assistant to the Revenue Commissioner. To join forthwith.

(ii) Mr. G. Aravamudiengar, from the Revenue Commissioner's office to Chikballapur Division. To join on relief.

(iii) Mr. C. Rama Rao, from Chikballapur Division to Bangalore for charge of the City Magistrate's Court, *vice* Mr. C. Balasundram Iyer, taken to the General and Revenue Secretariat. To join on relief.

(iv) Mr. K. Srinivasa Rao, from French Rocks to Kolar, *vice* Mr. Tyagaraja Iyer. To join forthwith.

(v) Mr. G. Hanumantha Rao is posted to Mysore as Vice-President of the Mysore City Municipality. He will hand over charge of his taluk to the Sheristadar and proceed forthwith to relieve Mr. C. Venkata Rao.

(vi) Mr. C. Devaraj Urs from Hunsur to Closepet. To join forthwith.

(vii) Mr. A. Subramanya Iyer, from Krishnarajpete to Hunsur. To join forthwith. He will however continue to be in charge of the Krishnarajpete Division also until relieved by Mr. Badami Krishna Rao.

(viii) Mr. Badami Krishna Rao, from Sagar to Krishnarajpete. To join on relief.

(ix) Mr. Nagar Subba Rao to Sagar, on return from leave.

(x) Mr. T. K. Sundararajiengar from Davangere to Mysore for charge of the District Treasury. To join on relief.

(xi) Mr. K. Chandy, from Shimoga to Davangere. To join on relief by Mr. Mahomed Raza.

(xii) Mr. Mahomed Raza is posted to Shimoga. He will hand over charge of his taluk to the Sheristadar and join his new station forthwith.

(xiii) Mr. C. Venkata Rao, from Mysore to Shimoga (Honnali Divison) for general duty. To join on relief by Mr. G. Hanumantha Rao.

(xiv) Mr. B. Venkoba Rao from Bangalore to French Rocks. To join forthwith.

(xv) Mr. P. Sreenivasa Rao, from Tumkur (Gubbi) to Bangalore, *vice* Mr. Venkoba Rao, transferred. To join on relief.

(xvi) Mr. Ananda Rao Sirsi, from Closepet to Gubbi. To join on relief.

(xvii) Mr. Hassan Ali from Shimoga to Kolar for charge of the District Treasury, *vice* Mr. Sheshadri Iyengar, retired. To join on relief.

(xviii) Mr. Vedantadesigam Iyengar is reverted from the Police Department and posted to Shimoga for charge of the District Treasury. To join on relief by Mr. M. P. Viswanatha Rao.

No. Fl. 8691—*Cts.* 313-05-1, *dated* 19*th June* 1906.

The following arrangements in the Judicial Department are ordered with effect from the 1st July 1906 :—

(a) District and Sessions Judges.

1. Mr. S. Venkatavaradaniengar, District and Sessions Judge, to be promoted from the 3rd to the 2nd class, in the vacancy caused by Mr. M. Ramaswami Iyer's retirement.
2. Mr. T. Paramasiva Iyer, Subordinate Judge, to be District and Sessions Judge, 3rd class, in the vacancy caused by Mr. S. R. Subbaraya Iyer's retirement, and to be posted to the Bangalore Division.
3. Mr. R. B. Plumer, Special Magistrate, Kolar Gold Fields, to be District and Sessions Judge, 3rd class, supernumerary, *vice* Mr. Venkatavardaniengar promoted, and to be posted to the Shimoga Division. To join his new appointment on relief.

(b) Subordinate Judges.

4. Mr. C. B. Seshagiri Rau, Sub-Judge, to be promoted from the 2nd to the 1st class, *vice* Mr. Paramasiva Iyer, promoted.
5. Mr. Mir Humza Hussain, B.A., B.L., Sub-Judge, to be promoted from the 3rd to the 2nd class, *vice* Mr. C. B. Seshagiri Rao, promoted, and to be posted to Mysore.
6. Mr. D. M. Narasinga Rao, B.A., B.L., Registrar of the General and Revenue Secretariat to be a Sub-Judge of the 3rd class, supernumerary, *vice* Mr. Singarachar, retired, and to be posted to Chikmagalur.
7. Mr. B. S. Krishnaswamiengar, B.A., B.L., Munsiff, 1st class, to be Sub-Judge, 3rd class, *vice* Mr. Varadarajiengar, retired, and to be posted to Shimoga.
8. Mr. Jehangir H. Bhabha, B.A., (Oxon) Barrister-at-law, to be a Sub-Judge of the 3rd class, *vice* Mr. Humza Hussain, promoted, and to be posted to Bangalore.

(c) *Munsiffs.*

9. Mr. M. Narasappaiya, B.A., B.L., to be confirmed as a Munsiff of the last class, *vice* Mr. B. S. Krishnaswamiengar.

10. Mr. D. K. Rama Rao. B.A., B.L., Judicial Probationer, to be confirmed as a Munsiff of the last class, *vice* Mr. J. Holt, retired.

11. Mr. G. Satyaji Rao. B.A., B.L., to be confirmed as a Munsiff of the last class, *vice* Mr. S. Seshagiri Rao, retired.

12. Mr. G. Srinivasa Iyer, B.A., B.L., Amildar, doing duty as Second Additional Munsiff of Bangalore, to be appointed a Munsiff of the last class, *vice* Mr. K. Mylari Rao, confirmed as Extra Assistant Commissioner.

13. Mr. Venkatkrishnaiya, B.A., B.L., to be appointed a Munsiff of the last class, *vice* Mr. Ananda Rao Sirsi, confirmed as Extra Assistant Commissioner.

14. Messrs. Mahadevaiya, B.A., B.L., and B. Rangiengar, B.A., B.L., Advocates, and Mr. A. K. Srinivasa Raghavachar, B.A., B.L., Judicial Probationer, to be appointed to act as Munsiffs to fill the acting vacancies now held by Nos. 9, 10 and 11.

No. J. 3545—*Cts.* 306-05-2, *dated* 21*st June* 1906.

Under Section 12 of the Code of Criminal Procedure, Mr. M. Srinivasa Murti, Extra Assistant Commissioner, in charge of the District Treasury at Tumkur, is appointed a Magistrate of the 3rd Class.

No. J. 3498—*Police* 195-05-2, *dated* 15*th June* 1906.

The following postings and transfer of officers in the Police Department, are ordered:—

1. Mr. B. S. Ranoji Rao, Assistant Superintendent, to the Shimoga District.
2. Mr. S. Narayan Rao, Assistant Superintendent, to the Hassan District.
3. Mr. M. P. Visvanath Rao, Assistant Superintendent, to the Kolar District.
4. Zahirudin Meccai, Superintendent, from the Shimoga to the Mysore District.

No. J. 3519—*Cts.* 312-05-1, *dated* 18*th June* 1906.

Mr. K. R. Sreenivasiengar, M.A., Assistant Commissioner and 1st Class Magistrate, Bangalore District, is temporarily posted, with effect from 1st July 1906, to the Kolar Gold Fields to act as Assistant Commissioner and 1st Class Magistrate there until the return of Mr. P. F. Bowring from leave. He will relieve Mr. R. B. Plumer, who is under orders of transfer to Shimoga as District and Sessions Judge.

No. R. 16019—*L. R.* 721-05-1, *dated* 18*th June* 1906.

The following confirmation, posting and transfers of Deputy Commissioners are ordered, with effect from the 1st July 1906:—

1. Mr. C. Srikanteswara Aiyar, Officiating Deputy Commissioner, to be a Deputy Commissioner of the 3rd class, *vice* Mr. M. S. Narayana Rao, under orders of retirement, but to continue in the Kolar District.
2. Mr. M. Kantaraj Urs, B.A., is posted to the Mysore District.
3. Mr. H. H. Sparkes is transferred from the Mysore to the Bangalore District.
4. Mr. D. Devaraj Urs is transferred from the Bangalore to the Kadur District.
5. Mr. M. Narayana Rao, now on leave, is transferred from the Kadur to the Shimoga District.

No. J. 3529—*Cts.* 177-05-2, *dated* 20*th June* 1906.

Under Section 12 of the Code of Criminal Procedure, Mr. T. Thumboo Chetty, B.A., Extra Assistant Commissioner and 3rd Class Magistrate, Bangalore District, is appointed a Magistrate of the 2nd Class, and is invested with the following additional powers:—

(1) Power to commit for trial (Section 206).

(2) Power to take cognizance of offences without complaint (Section 190).

(3) Power to make order as to first offenders (Section 562).

Powers (2) and (3) will be exercised by Mr. Thumboo Chetty temporarily during the period he remains in charge of the Bangalore City Magistrate's Court.

No. J. 3546—*Cts.* 320-05-2, *dated* 21*st June* 1906.

The following transfers and postings of Munsiffs are ordered, with effect from the 1st July 1906 :—

Transfers.

Name	From	To
Mr. Sivaprakasam Pille ...	Mysore (Additional Munsiff) ...	Dodballapur.
,, G. Srinivasa Iyer ...	Bangalore (2nd Additional Munsiff).	Kolar.
,, N. T. Gopaliengar ...	Hole-Narsipur	Mysore (Principal Munsiff).
,, S. Hiriyannayya ...	Mysore (2nd Additional Munsiff).	Mysore (Additional Munsiff).
,, M. L. Srikantesha Gowda.	Dodballapur	Nanjangud.
,, M. Narasappayya ...	Sagar ...	Hole-Narsipur.
,, S. Venkatakrishnayya.	Mysore (Acting Additional Munsiff).	Sagar.

Postings.

Mr. Mahadevayya ... ... Mysore 2nd Additional Munsiff.
,, B. Rangiengar ... ... Bangalore do
,, A. K. Srinivasa Raghavachar ... Dodballapur (Acting during the absence of Mr. Sivaprakasam Pille on leave).

No. R. 16166—*L. R.* 201-05-16, *dated* 21*st June* 1906.

The following postings and transfers of Amildars and Deputy Amildars are ordered ; and under Section 12 of the Criminal Procedure Code, the officers newly appointed are invested with Magisterial powers as shown against their names :—

Name	From Taluk	To Taluk	Magisterial powers conferred	Remarks
Mr. M. Ranganatha Rao	Krishnarajpete ...	Kunigal ...		
,, V. S. Rajagopalachar	.....	Krishnarajpete ...	Powers of a Magistrate of 3rd class.	
,, K. A. Ranganna, Deputy Amildar.	.....	Koratagere ...	Do	
,, K. Kesavachar ...	.....	Mudgere ...	.....	
,, T. Venkatramaiya ...	Heggaddevankote ...	Shimoga ...	.....	*Vice* Mr. [illegible]. S. Ranoji Rao, appointed Assistant Superintendent of Police.
,, C. R. Krishna Rao	Tarikere ...	Bowringpet ...	.....	*Vice* Mr. S. Narayana Rao, appointed Assistant Superintendent of Police.
,, Sheik Abdulla ...	Channagiri ...	Tarikere ...	.....	
,, A. Krishnasamiengar	Nanjangud ...	Bangalore ...	.....	*Vice* Mr. M. G. Krishnasami Rao, appointed Extra Assistant Commissioner, *sub pro tem.*
Mr. B. Kesavaiya ...	Molakalmuru ...	Nanjangud ...	.....	
,, P. Ranga Rao ...	Chikballapur ...	Molakalmuru ...	.....	
,, G. Narayana Rao ...	.....	Chikballapur ...	.....	
,, S. Anantaramiengar, Deputy Amildar.	.....	Gudibanda ...	Powers of a Magistrate of 3rd class.	
,, S. N. Appanniengar.	Devanhalli ...	Channarayapatna ...	Do	
,, Gulam Mahomed Meccai.	.....	Shikarpur ...	.....	
,, Mohadin Sheriff, Deputy Amildar.	Alur	Closepet (Sub-Taluk)	.....	
,, C. V. Narayana Rao.	Tiptur	Kolar	.....	
,, C. Gopalachar ...	Maddagiri ...	Tiptur	.....	
,, V. Krishna Rao ...	.....	Maddagiri ...	.....	On relief by Mr. T. Chokkanna.
,, B. C. Krishna Sastri	Hoskote	Goribidnur ...	.....	*Vice* Mr. D. Subba Rao, retired.
,, C. V. Krishnaswami Rao.	Mandya	Holalkere ...	.....	*Vice* Mr. M. P. Viswanatha Rao, appointed Asst. Supt. of Police.
,, B. T. Seetharamiah (Acting).	Hole-Narsipur ...	Mandya ...	.....	
,, S. Krishna Iyer ...	Belur	Hole-Narsipur ...	.....	
,, B. Krishna Singh ...	Manjarabad ...	Belur	.....	
,, N. Ramaswamiengar.	.....	Manjarabad ...	Powers of a Magistrate of 3rd class.	
,, G. Mardappa, Deputy Amildar.	.....	Kumsi	Do ...	*Vice* Narasimhalu Naidu, retired.

2. The following acting appointments are ordered :—

(1) H. Basavaraj Urs, Deputy Amildar of Koratagere Sub-Taluk, to act as Amildar and 3rd Class Magistrate of the Hoskote Taluk, during the employment of Mr. B. Ramaswamayya, as Acting Extra Assistant Commissioner.

(2) P. Subba Rao, B.A., B.L., Head-quarter Inspector of Police, Kolar District, to act as Amildar and 3rd Class Magistrate of Anekal, *vice* Mr. Mahomed Raza, appointed Acting Extra Assistant Commissioner.

(3) Dharma Rao, Judicial Head Munshi, Kolar District Office, to act as Amildar and 3rd Class Magistrate of Heggaddevankote, during the employment of Mr. G. R. Srinivasa Iyengar, as Acting Extra Assistant Commissioner.

(4) Burli Krishna Rao, Head-quarter Inspector of the Chitaldrug District, to act as Amildar and 3rd Class Magistrate of the Channagiri Taluk, during the employment of Mr. M. Ranga Rao, as Acting Extra Assistant Commissioner.

(5) M. Ahobala Sastri, Clerk in the General and Revenue Secretariat, to act as Deputy Amildar and 3rd Class Magistrate of the Turuvekere Sub-Taluk.

(6) Mohidin Syed Sheriff, Taluk Sheristadar, Chiknayakanhalli, to act as Deputy Amildar and 3rd Class Magistrate of the Alur Sub-Taluk, *vice* Mohidin Sheriff, transferred to Closepet Sub-Taluk.

NOTE.—The officers newly appointed should be relieved so as to be able to reach their destination and take charge of their new appointments on 1st July 1906.

The officers transferred should be relieved on the 1st of July 1906, by handing over charge to their Taluk Sheristadars or others, as directed by the Deputy Commissioners of their Districts and required to proceed forthwith to take over charge of their new taluks or sub-taluks.

The Petition Box kept at the General and Revenue Secretariat, Bangalore, will be cleared at 12 noon every day by the Secretary to Government, and in his absence from Bangalore, by one of the Under-Secretaries."

By Order,
K. S. CHANDRASEKHARA AIYAR,
Secy. to Govt., Gen. & Rev. Dept.

GEOLOGICAL.

No. 2490, *dated 1st June* 1906.

The Government of His Highness the Maharaja of Mysore are pleased to make the following addition to the rules for the grant of prospecting licenses and mining leases issued with Notification (Geological) No. 555—S., dated 2nd March 1904 :—

Rule 8, *line* 1.—After " block of land, " add " not exceeding 12 square miles."

No. 2521, *dated 4th June* 1906.

The Government of His Highness the Maharaja of Mysore are pleased to direct that the following additions be made to the rules for the grant of prospecting licenses and mining leases in Mysore, published under Government Notification (Geological) No. 555—S., dated 2nd March 1904 :—

(1) *Rule* 10.—After the words " will be valid for one year " add the words " or such shorter period within which a mining lease is granted thereunder to the licensee."

(2) *Form of License, Clause* 1.—After the words " one calendar year from the date hereof " add " or such shorter period within which a mining lease is granted hereunder to the licensee."

(3) *Form of License, Clause* 15.—Add a fresh sentence at the end :—" When such mining lease has been granted to the licensee, this license shall immediately cease and determine."

No. 2759, *dated 13th June* 1906.

The Government of His Highness the Maharaja of Mysore are pleased to direct that the following alterations and additions be made in the General Rules for the grant of Prospecting Licenses and Mining Leases in Mysore, issued under Government Notification (Geological) No. 555-S, dated 2nd March 1904, in the case of applications for licenses and leases for Manganese and Chromium :—

(1) *Rule* 15.—After the words " in any direction " add the words " or two square miles in the case of Manganese and Chromium."

Rule 19.— Ditto

Rule 20.—For " thirty " read " ten."

Rule 21.— Omit.

Rule 22.—(*a*) For " Rs. 1,000 " read " Rs. 500."

FORM No. 2.

After the words "Prospecting License" in the heading and in the first para add the words "for Manganese or Chromium."

After "March 1904" add the words "as modified by Notification No. 2759, dated 13th June 1906."

FORM No. 3.

Heading of Form.—Add the words "for Manganese," or "for Chromium" (as the case may be) after "Prospecting License."

Preamble.—For the word "minerals" substitute the word "Manganese" or "Chromium" (as the case may be). After "March 1904" add "as modified by Notification No. 2759, dated 13th June 1906."

Clause 1.—For the words "minerals, stones and rocks" substitute the word "Manganese" or "Chromium" (as the case may be).

Clause 6.—For the words "all minerals, stones and rocks" in the second line substitute the word "Manganese" or "Chromium" (as the case may be).
In the same clause, after the word "royalty," substitute "at six annas per ton of ore removed" for the words "at the following rates on the gross value of the gold.....finished products, five per cent."

Clause 7.—For the words "minerals, stones and rocks" read the words "the Manganese" or "the Chromium" (as the case may be).

Clause 15.—After the words "mining purposes" and before "a block of land" add the words "within the area to which this license applies," and for the words "one square mile in area and not more than one mile from end to end..... applies" substitute "two sqare miles, which shall be as far as possible in the shape of a rectangle of which the length must not under ordinary circumstances exceed twice the breadth."

And after the words "2nd March 1904," add "as modified by Notification No. 2759, dated 13th June 1906."

FORM No. 4.

After the words "Mining Lease" in the heading and in the 1st para, add the words "for Manganese or Chromium."

After "March 1904" add "as modified by Notification No. 2759, dated 13th June 1906."

3rd para.—For "Rs. 1,000" read "Rs. 500."

4th para.—Omit.

FORM No. 5.

Heading of the Form.—Add the words "for Manganese" or "for Chromium" (as the case may be) after "Mining Lease."

Clause 2.—Substitute "Rs. 500" for "Rs. 1,000."

Clause 3.—Substitute the word "Manganese" or "Chromium" (as the case may be) for the words "all.....rocks" and omit the word "collectively" and read "mineral" for "minerals."
In the same clause omit the words "gold, metals, precious stones or other."

Clause 4.—Read "Mineral" for "Minerals."

Clause 5.—Substitute "ten" for "thirty" before "years" in the second line.

Clause 8.—After the word "royalty" substitute the words "provisionally fixed at the rate of six annas per ton of ore removed" for the words "at the rates hereinafter .....all other finished products, five per cent."

Clause 11.—Read the words "the mineral" for the words "all minerals."

Clause 13.—Omit this clause altogether.

Clause 14.—Read the words "the minerals" for the words "all minerals."

Clause 15.—Read the words "the minerals" for the words "all minerals."

Clause 16.—Read "Royalty" for "Royalties" and omit the words "provided.....

Clause 18.—Read "mineral" for "minerals."

Clause 22.—Read "mineral" for "such minerals."

Clause 44.—For "the raising of minerals" read "the raising of the mineral," Substitute the word "therefrom" for the words "from such minerals."

Clause 46.—Read "the mineral" for "minerals."

Clause 47.—Omit the words "or shall fail to provide .....block" and substitute "ten" for "thirty" and "Rs. 500" for "Rs. 1,000."

Add the following as a fresh para :—

Provided also, and these presents are upon this express condition, that the license and liberty granted by this lease shall apply to $\frac{\text{Manganese}}{\text{Chromium}}$ ores only, and that in the event of any other metal or metals, mineral or minerals, of economic value being discovered by the lessee within the mining block, the lessee shall forthwith communicate the same in writing to the lessors within a period of sixty days of such discovery, and shall be entitled on application to the lessors, to receive a secondary mining lease in respect of the discovered metal or metals, mineral or minerals; should no such application for a secondary lease be received by the lessors within four months from the date of the report of the discovery of the metal or metals, mineral or minerals, the lessors may at their discretion grant a secondary lease of the particular area containing the other metal or metals, mineral or minerals, to other applicants."

Clause 48.—Substitute "ten" for "thirty."

Clause 49.—Substitute "ten" for "thirty" in the two places in which this word occurs in this clause.

Schedule A.—Add the word $\frac{\text{("Manganese")}}{\text{or ("Chromium")}}$ before "Mining Block."

Schedule B.—Omit.

By Order,
E. W. WETHERELL,
Offg. Secy. to Govt., Geol. Dept.

MILITARY.

No. 4260-2, *dated* 20*th June* 1906.

His Highness the Maharaja of Mysore is pleased to sanction the following grade promotions in the commissioned ranks of the Imperial Service Regiment, with effect from 1st April 1906 :—

Rank	Name	From Rank	To Rank
Jemadar ...	Krishna Rao Sindhay	Troop Commander, 4th Grade.	Troop Commander, 3rd Grade.
Do ...	Hanumantha Rao Powar.	Troop Commander, 5th Grade,	Troop Commander, 4th Grade.

By Order,
R. G. JONES, *Lt.-Col.*,
Military Assistant.

794

The Mysore Gazette

Vol. 41.] PUBLISHED BY AUTHORITY. [No. 25.

BANGALORE, THURSDAY, JUNE 21, 1906.

PART II.

Notifications by Govt. of India, Resident, Chief Court, &c.

FOREST DEPARTMENT.

IMPERIAL FOREST SCHOOL, DEHRA DUN.

Notification dated 1st June 1906.

Applications are invited before 15th July 1906, from natives of Mysore being *full graduates* in Arts for training in the Imperial Forest School at Dehra Dun, with a view to their subsequent employment as Forest Rangers in the State on salaries rising from Rs. 50 to Rs. 100 per mensem, provided their conduct and training continue to be satisfactory.

Candidates should submit certificates of physical fitness for out-door life, age and of respectability and moral character from heads of Colleges or individuals of position.

2. Selected candidates must appear in October next for the Entrance Examination of the Dehra Dun School, which will be held in the office of the Conservator of Forests at Bangalore, on passing which they will be called upon to undergo a probationary practical forest training of three and a half months under the orders of the Conservator, before joining the Forest School in April 1907.

3. While under this practical training, they will receive travelling allowance of Rs. 20 per mensem, and should they give satisfaction during this period, will be deputed to Dehra Dun and given—

(i) A monthly stipend which will not be more than Rs. 40 per mensem during the course of 23½ months which they have to undergo at the school ;

(ii) their actual travelling allowance to and from Dehra Dun.

4. The grant of this stipend will be held to constitute a lien on the candidate's services for a period of five years after leaving the school, and removal for misconduct within that time will be grounds for refund of the total stipend awarded, and for this, proper security will be demanded. On the other hand, Government will be under no obligation to employ the candidate after returning from the school, while it may discontinue the grant of stipend at any time during the school course *without assigning any reason for so doing.*

For further information regarding the rules, etc., of the school, applicants should address this office.

Notice dated, 18th June 1906

TENDERS FOR THE PURCHASE OF SANDALWOOD IN THE HUNSUR KOTI.

1. Sealed tenders are invited up till the 25th June 1906, for the purchase of the undermentioned sandalwood to be re-sold under Rule 5 of the Sandal Auction Sale Rules issued under Government Notification No. 822—Ft. F. 16-96, dated the 5th June 1901, owing to the original purchaser Mr. Hajee Enaitulla of Kanouj City having failed to pay the full value of the wood and to otherwise abide by the conditions of the aforesaid sale rules :—

GOVERNMENT WOOD.

		T.	cwt.	lb.
Lot 1.	Roots II class	2	10	0
„ 2.	Roots III class	4	0	0
„ 3.	Jajpokal I class	15	0	0
	Total ...	21	10	0

INAM WOOD.

Lot 4.	Roots II class	0	9	70
	Grand Total ...	21	19	70

2. Each tender must be for one or more entire lots and should specify the rate per ton offered.

3. Tenders should be superscribed "Tender for the purchase of Sandalwood," and addressed to the Conservator of Forests in Mysore, Bangalore.

4. Each tender should be accompanied by a deposit of Rs. 100 as earnest money, which will be returned after the disposal of tenders to the unsuccessful tenderers.

5. The Conservator of Forests reserves to himself the right of rejecting any tender without assigning a reason therefor.

6. The successful tenderer should, within three days of the receipt of the intimation accepting his tender, pay up the full value of his purchases, failing which his earnest money will be forfeited to Government and the wood will be re-sold at the risk of the purchaser, who shall be liable for any loss but not participate in any profit. The amount due by the defaulter shall be recoverable as a revenue demand.

M. MUTHANNAH,
Conservator of Forests.

Notice dated 29th May 1906.

Attention of the firewood dealers is invited to this office Notification published in the *Mysore Gazette*, dated 7th June 1906, advertising the sale of firewood in the marked coupes of the Kamasandra State Forest, which will be held on Monday the 25th June 1906 at the Bowringpet travellers' bungalow.

S. A. BAPU RAO,
Dist. Forest Officer, Kolar.

Notice dated —— June 1906.

Under Section 40 of the Mysore Forest Regulation, 1900, it is hereby notified that the log described below, which was found adrift in the Kapila river, is now lying at the Nanjangud Depot. Persons claiming the same, are required to present to the District Forest Officer, Mysore District, a written statement of such claim within a month from the date of this notice, failing which, the ownership of the log in question shall, under Section 42 of the Mysore Forest Regulation, vest in the Government free from all encumbrances.

Kind.	No.	Marks.	Length. ft.	Length. in.	Girth. ft.	Girth. in.	Cubical contents. ft.	Cubical contents. in.	pts.
Honne log	H. 02—96	I. L. C.	15	0	6	3	36	7	5

Notification dated 16th June 1906.

It is hereby notified for general information that the exclusive privilege of collecting Tangadi (*cassia auriculata*) and Kakke (*cassia fistula*) barks on all Government unoccupied lands, excluding State Forests and Plantations (which will be separately dealt with) in the undermentioned taluks of the Mysore District, from 1st July 1906 to 30th June 1908, will be sold talukwar by public auction by the District Forest Officer at the District Forest Office at Mysore on the 16th July 1906 :—

Names of Taluks.

(1) Nanjangud.	(4) Mandya.	(7) Gundlupet.
(2) Seringapatam.	(5) Hunsur.	(8) Yedatore.
(3) Nagamangala.	(6) T.-Narsipur.	(9) Chamrajnagar.

2. The auction will commence at 2 P.M. on the day of sale, and, if the sale is not completed on the same day, it will be continued on the next following day at the same hour.

3. The exclusive privilege above described will be disposed of to the highest bidder, but the sale will be subject to the confirmation of the Deputy Commissioner, who reserves to himself the right to accept or reject any bid without assigning any reason therefor.

4. Parties intending to bid must attend either in person or by duly accredited agents, and no person will be permitted to bid either on his own behalf or on account of any one else, unless he deposits a sum of Rs. 100. The deposits made by the unsuccessful bidders will be returned at the close of sale. The successful bidder shall, within three days after the confirmation of the sale is intimated to him, pay into the Mysore District Treasury one-fourth of the total rental, including the deposit already made. Should he fail to do so, the deposit will be forfeited and the exclusive privilege will be re-sold by the officer conducting the sale.

5. The sale effected under the above para will be at the risk of the defaulting bidder, who will forfeit all gain, and, in the event of a loss by such re-sale, shall make good the deficiency between the total amount payable by him for the whole period under the terms of the original sale and the total amount payable by the successful bidder at the re-sale.

If the deficit be not paid on demand, it will be liable to be recovered as a revenue demand.

6. The lessee shall sign an agreement binding himself to observe the conditions below, and it should be executed within three days from the date on which the confirmation of the sale may be intimated to him; in default, the deposit will be forfeited and the right re-sold.

7. The balance of the lease amount and the local cess at one anna in the rupee on the whole sum shall be paid in full before the end of July 1906 or by quarterly khists in advance, *i.e.*, on 1st December 1906 (1st) (khist), 2nd June 1907 (2nd khist), and 1st December 1907 (3rd khist). In the event of a khist not being so paid, collection and removal of the barks will be stopped and the whole of the balance of the lease amount and local cess due will be recovered as a revenue arrear.

Conditions.

(1) No stem or shoot under one year old to be cut or barked.

(2) To hold him responsible to prevent the felling of tender stems by his servants or sub-contractors.

(3) To furnish a list of sub-contractors and mestris who may be appointed by him for the collection of barks in the different working circles.

(4) The barked wood to be the property of the lessee.

(5) To keep accounts showing the quantity of the bark removed in accordance with the lease and to permit inspection of such accounts by the District Forest Officer, Forest Range Officer, and the Amildar or any other officer deputed by them.

(6) To provide passes for each cart-load of bark in such manner as may be laid down by the District Forest Officer.

(7) To remove out of the limits of the Mysore District and before the end of June 1906, all barks cut, collected or stored.

(8) In the event of breach of any of the above conditions, the lease is liable to be cancelled, all the barks collected to be confiscated, and the whole of the amount paid by him or such portion thereof, as may be decided by the Deputy Commissioner, Mysore, to be forfeited to Government.

(9) In the case of some, only stunted and deformed trees must be cut for the removal of bark. Young, healthy, and straight-growing and mature trees should on no account be cut.

(10) As regards the collection of Papli bark, only lateral roots of the Papli climber which are sufficiently mature to yield dye, should be carefully removed so that the tap root may not be injured in any way, and this should be done in the rainy season.

M. G. RAMA RAO,
Dt. Forest Officer, Mysore Dt.

EDUCATION DEPARTMENT.

Notification, D. No. 49, dated 11th June 1906.

EXAMINATIONS FOR TEACHERS' CERTIFICATES.

1. The Examinations for Teachers' Certificates shall be of three grades, namely (1) Upper Secondary, (2) Lower Secondary, and (3) Primary, and shall be held in the months of November and December.

2. The Examinations shall consist of two parts, (1) a Written Examination, and (2) a Practical Test, and shall be conducted either in English or Vernacular.

3. The Examinations shall be open to all who, besides possessing the minimum educational qualifications, have either (1) gone through the full training course of a recognized Normal School and been permitted by the Head Master to appear, or (2) been teachers in a recognized school for at least three years, and an inspecting officer has certified that their work as teachers has been fairly satisfactory.

4. Candidates for admission shall produce a certificate from a person of known respectability, stating that they are above fifteen years and under twenty-five years, if they have not been teachers already in Government, Municipal, or Aided School, or under thirty-five years, if they have been employed for not less than three years continuously as teachers in a Government, Municipal, or Aided School.

5. The minimum educational qualifications required for admission to the Examinations shall be as follow:—

(1) For the Upper Secondary Teachers' Certificate, a certificate of having passed the Matriculation Examination or the Vernacular Teachers' or Upper Secondary Examination.

(2) For the Lower Secondary Teachers' Certificate, a certificate of having passed the Mysore Lower Secondary Examination or the late Middle School Examination of the Madras Department.

(3) For the Primary Teachers' Certificate, a certificate of having passed in all the heads of Vernacular Standard III, signed by a Deputy Inspector of Schools.

6. The Written Examinations for Teachers' Certificates of the Upper and Lower Secondary Grades shall be held in the Normal School at Mysore on the third Monday in November and following days; and the Written Examinations for Teachers' Certificates of the Primary Grade shall be held at the head-quarters of each district, and at Chikballapur and Channapatna on the Saturday immediately following the Lower Secondary Examination in November.

7. The subjects of the Written Examination shall be the following:—

For Upper Secondary Teachers' Certificate—

(1) The theory and practice of teaching the subjects included in the curriculum of Lower Secondary and Primary Schools, the art of oral teaching generally, Kindergarten principles and methods, and notes of a lesson on one of three given subjects. One paper of three hours' duration, 120 marks.

(2) Organization of schools and principles of moral discipline, 180 marks:—

(*a*) The organization of Lower Secondary and Primary Schools, the form of school registers, the mode of keeping them and making returns from them, and the correct forms of official correspondence. One paper of three hours' duration, 120 marks.

(*b*) Principles of moral discipline, and formation of habits and character. One paper of the duration of two hours, 60 marks.

For Lower Secondary Teacher's Certificate—

I. The methods of teaching the subjects included in the curriculum of Upper Primary Schools, the art of oral teaching generally, Kindergarten principles and methods, and notes of a lesson on one of three given subjects. One paper of 3 hours' duration, 150 marks.

II. The organization and discipline of a Primary School, the form of school registers, the mode of keeping them and making returns from them. One paper of three hours' duration, 150 marks.

For Primary Teachers' Certificate—

I. The art of oral teaching generally, Kindergarten principles and methods, and notes of a lesson on one of three given subjects. One paper of the duration of two hours, 150 marks.

II. The organization and discipline of a Lower Primary School, the form of school registers, the mode of keeping them and making returns from them. One paper of the duration of two hours, 150 marks.

8. Candidates shall not be considered to have passed, unless they have obtained not less than 40 per cent of the maximum marks allotted to each paper. Those successful candidates that have obtained 60 per cent of the marks on the whole shall be placed in the First Class and the rest in the Second Class.

9. The results of the Written Examinations shall be declared not later than the second Wednesday following the Examinations.

10. The Practical Tests shall commence in the Normal School, Mysore, on the second Monday following the Written Examinations, in the case of the Upper Secondary and Lower Secondary grades, and the third Monday after the Written Examinations in the case of the Primary grade.

11. The Practical Test shall be conducted by a Committee of not less than two Examiners.

12. No candidate shall be admitted to the Practical Test until he has passed the Written Examination.

13. The Practical Test shall comprise the following subjects :—

I. Compulsory—

(1) The giving of one lesson, which has not been previously taught to a class, of not less than thirty and not more than forty-five minutes' duration before at least two members of the Committee of Examiners—Total number of marks—250 which shall be divided between (1) Skill in questioning, (2) Exposition, Illustration and Explanation, (3) Discipline, (4) Black board illustrations and notes, (5) The final result produced on the pupils' minds.

(2) Black board exercises, 70 marks. The candidate should be able to draw within a limited time a map, a common object or an animal in bold outline and work a sum or write neatly on the board.

(3) (i) For male teachers—

Drill. The candidate should be able to put a class of boys already drilled through a set of elementary exercises—40 marks.

(ii) For female teachers—

Singing or drill as for male teachers—40 marks.

II. Optional :—

For male teachers only—Singing—40 marks. The candidate should be able to sing well as well as to teach the singing of the songs given in the Readers, action songs, and other songs suitable for schools. The marks obtained by him shall be added to the marks obtained in the Compulsory subjects and shall help in determining the class in which he should be placed. The fact of a candidate having passed in singing shall be stated in his certificate.

14. Two days before the candidate is required to give his lesson, he shall be furnished by the Examiners with two subjects, either of which he may select for his lesson.

15. No candidate shall be considered to have passed the Practical Test unless he has obtained 33 per cent of the maximum marks under each of the above heads. Those successful candidates that have obtained 60 per cent of the marks on the whole shall be placed in the First Class and the rest in the Second Class.

16. Those candidates that have passed both the Written Examination and Practical Test of any grade shall obtain the Teachers' Certificate of that grade.

Those that obtain the Teachers' Certificate of the Upper Secondary Grade will be qualified to teach in the Lower Secondary Classes.

Those that obtain the Teachers' Certificate of the Lower Secondary Grade will be qualified to teach in the Upper Primary Classes.

Those that obtain the Teachers' Certificate of the Primary Grade will be qualified to teach in the Lower Primary Classes.

17. Applications for admission to the Teachers' Certificate Examinations should reach the Manager, Mysore Local Examinations, not later than the 15th August preceding the Examinations.

18. The fees for admission to the Examinations will be—

	Rs.
For the Upper Secondary Grade	... 4
For the Lower Secondary Grade	.. 2
For the Primary Grade	... 2

A candidate who fails in the Written Examination will be admitted to subsequent Examinations on payment of the same fee on each occasion.

A candidate who fails in the Practical Text will subsequently be admitted to the same test on payment of a fee of half the above rates.

H. J. BHABHA,
Inspr.-Gen. of Education.

POLICE DEPARTMENT.

Dated 5th June 1906.

Descriptive roll of a person found dead under an avenue tree near the bungalow of Revd. Peck in Talkad on 17th March 1906 :—

Name	Not known.
Residence	Do
Caste	Do
Age	About 50 or 55 years.
Complexion	Dark.
Sex	Male.
Description	Has no tuft of hair on the head; has mustaches and hair on the chin.
Property found .. .	Nil
Remarks	Died of dropsy.

Dated 5th June 1906.

Descriptive roll of a person found dead on 6th April 1906 near the chattram behind Nanjundeswaraswami temple in Nanjangud :—

Name	Not known.
Sex	Male.
Residence	Not known.
Caste	Byragi.
Height	5 feet, 6 inches.
Age	50 years.
Complexion	Dark.
Descriptive marks	Long face; no hair on the head; body emaciated.
Property found	two pieces of cloth on the body.

Dated 11th June 1906.

Descriptive roll of a person found dead near the ditch in the Kurubagere of Hingala on the Nilgiri road, Hanumantharayanagudi Station limits, Gundlupet Taluk, on the 31st May 1906 :—

1. Name	Not known.
2. Caste	Do
3. Residence	Do
4. Age	About 70 years.
5. Height	5 feet 6 inches.
6. Complexion	Red.
7. Description	Round face; tuft of hair on the head; gray hairs on the chin, etc., body emaciated.
8. Property found	A thread round the waist; an old and worn-out panche and gunny bag.
9. Remarks	The S. H. Officer reports that the deceased looked like a traveller and to have died of consumption.

Dated 13th June 1906.

Descriptive roll of a person found dead in Lakshman Tirtha river near Belthur village in the Hunsur Taluk :—

1. Name	D'Souza *alias* Locha.
2. Caste	Mangalore Christian.
3. Age	About 45 years.
4. Height	5 feet 5 inches.
5. Residence	Not known.
6. Complexion	Cannot be ascertained since the face, eyes, chest, stomach and other important parts of the body were eaten up by fish and other animals.
7. Description	
8. Property found	A black check cap on the head, and a piece of white cloth round the waist.

MAHOMED JAFFER,
Supt. of Police, Mysore Dt.

MISCELLANEOUS.

BANGALORE DISTRICT.

Notification.

It is hereby notified for public information that the undermentioned Jodi village, which has been duly attached in satisfaction of the arrears of revenue due to Government as shown in the subjoined statement by the said Jodidars, will be sold by public auction at the place and on the date mentioned in the annexd statement. The sale will commence at 11 A.M. on the date specified and the village will be knocked down to the highest bidder without reserve.

2. Provided that when a village is divided into separate recognized vrittis, the Deputy Commissioner may, at his option, instead of selling the village as a whole, sell each vritti separately.

3. The purchaser will be required to deposit twenty-five per cent of the purchase money at the time of sale, and where the remainder of the purchase money may not be paid within fifteen days from the day of sale, the money so deposited shall be liable to forfeiture.

4. When such deposit shall not be made nor the remaining purchase money paid up, the lands shall be re-sold at the expense and risk of the first purchaser.

5. Persons bidding at the sale may be required to state whether they bid on their own account or as agents, and in the latter case to deposit a written authority signed by their principals, otherwise their bids may be rejected.

6. The sale shall be stayed if the defaulters, or any other person acting on their behalf or claiming an interest in the land, tender the full amount of the arrears of revenue with the interest and other charges, before the property is knocked down or give satisfactory proof that the amount of arrears, etc., has been paid up or furnish security under Section 170 of the Mysore Land Revenue Code.

7. Purchaser having completed the payment of the purchase money will, as soon as the sale has been confirmed, be placed in immediate possession, and the village will be registered in the name of the purchaser, and a certificate of sale, signed and sealed by the Deputy Commissioner, will be granted to him. It is to be distinctly understood that the Government are not responsible for errors of description and in estimated extent.

8. Provided, parties deeming themselves aggrieved by the sale, shall be at liberty to appeal to the Dewan within ninety days from the day of sale, and the purchase shall be conditional on the final order in such appeal.

SCHEDULE.

District	Taluk	Hobli	Village	Name of Jodidars	Estimated extent			Estimated gross rental or beriz			Quit-rent payable annually to Government				Arrears of Government revenue for which village is to be sold			Date of sale.	Place of sale
					A.	g.		Rs.	a.	p.	Rs.	a.	p.		Rs.	a.	p.		
Bangalore	Hoskote	Sulibele	Yettina Vadearapura Kayamgutta	Vasudeva Rao, etc.	69	35		82	4	0	53	2	0	1900-01	7	0	4	14th September 1906.	Hoskote Taluk Cutcherry.
														1901-02	18	2	0		
														1902-03	26	11	7		
														1903-04	26	11	9		
														1904-05	53	7	3		
															132	0	11		
														Notice fee, etc.	1	8	0		
														Total ...	133	8	11		

Boundaries.

East—Sadappanhalli.
West—Yemigunta and Attibele.
North—Attibele Sadappanhalli.
South—Sadappanahalli Yemigunta (whole village).

NOTE.—The sale is free from all tenures, encumbrances and rights created by the Jodidars or any of their predecessors in title or in any wise subsisting against them.

T. ROYALU CHETTY,
for *Dy. Comr.*

Notification dated 15th June 1906.

1. It is hereby notified for public information that the undermentioned Jodi village, which has been duly attached in satisfaction of the arrears of revenue due to Government (as shown in the subjoined statement) by the said Jodidar, will be sold by public auction at the place on the date mentioned in the annexed statement. The sale will commence at 11 A.M., on the date specified, and the village will be knocked down to the highest bidder without reserve.

2. Provided that when a village is divided into separate recognized vrittis, the Deputy Commissioner may, at his option, instead of selling the village as a whole, sell each vritti separately.

3. The purchaser will be required to deposit twenty-five per cent of the purchase money at the time of sale, and where the remainder of the purchase money may not be paid within fifteen days from the day of sale, the money so deposited shall be liable to forfeiture.

4. When such deposit shall not be made, nor the remaining purchase money paid up, the lands shall be re-sold at the expense and risk of the first purchaser.

5. Persons bidding at the sale may be required to state whether they bid on their own account or as agents, and in the latter case, to deposit a written authority signed by their principals, otherwise their bids may be rejected.

6. The sale shall be stayed, if the defaulter or any other person acting on his behalf or claiming an interest in the land, tender the full amount of the arrears of revenue with the interest and other charges, before the property is knocked down, or give satisfactory proof that the amount of arrears, etc., has been paid up, or furnish security under Section 170 of the Mysore Land Revenue Code.

7. Purchaser having completed the payment of the purchase money will, as soon as the sale has been confirmed, be placed in immediate possession, and the village will be registered in the name of the purchaser, and a certificate of sale, signed and sealed by the Deputy Commissioner, will be granted to him. It is to be distinctly understood that the Government are not responsible for errors of description or in estimated extent.

8. Provided, parties deeming themselves aggrieved by the sale, shall be at liberty to appeal to the Government within ninety days from the day of sale, and the purchase shall be conditional on the final order in such appeal.

SCHEDULE.

District	Taluk	Hobli	Village	Name of Jodidar	Estimated extent			Estimated gross rental or beriz			Quit-rent payable annually to Government			Arrears of Government revenue for which village is to be sold	Date of sale, etc.
						A.	g.	Rs.	a.	p.	Rs.	a.	p.		
Bangalore	Magadi Taluk	Gudemaranahalli	Jodi Pemmanahalli	Gangadara Gowda	Kharab	68	18	4	8	0				Rs. a. p. Arrears ... 18 4 7 Notice fee ... 1 8 0 Total ... 19 12 7	13th September 1906.
					Dry	413	18	271	4	9					
					Wet	25	15	42	7	0					
					Garden	13	30	31	9	11					
					Total ...	526	1	349	13	8					

T. THUMBOO CHETTY,
for *Dy. Comr.*

Memo dated 18th June 1906.

Under the provisions of Section 37, Criminal Procedure Code, Mr. T. Thumboo Chetty, Assistant Commissioner and 3rd Class Magistrate attached to Bangalore District, is hereby invested with the following additional powers specified in the 4th Schedule :—

1. Power to make orders prohibiting repetitions of nuisances, Section 143, C. P. C.
2. Power to make orders under Section 144, C. P. C.
3. Power to hold inquests, Section 174, C. P. C.
4. Power to take cognizance of offences upon complaint, Section 190, C. P. C.
5. Power to take cognizance of offences upon Police reports, Section 190, C. P. C.

D. DEVARAJ URS,
District Magistrate.

KOLAR DISTRICT.

Notification dated 11th June 1906.

It is hereby notified for public information that the undermentioned Jodi village, which has been duly attached in satisfaction of the arrears of revenue due to Government (as shown in the subjoined statement) by the said Jodidars, will be sold by public auction at the place and on the date mentioned in the annexed statement. The sale will commence at 11 A.M., on the date specified, and the village will be knocked down to the highest bidder without reserve.

2. Provided that when a village is divided into separate recognized vrittis, the Deputy Commissioner may, at his option, instead of selling the village as a whole, sell each vritti separately.

3. The purchaser will be required to deposit 25 per cent of the purchase money at the time of sale, and where the remainder of the purchase money may not be paid within fifteen days from the day of sale, the money so deposited shall be liable to forfeiture.

4. When such deposit shall not be made nor the remaining purchase money paid up, the lands shall be resold at the expense and risk of the first purchaser.

5. Persons bidding at the sale may be required to state whether they bid on their own account or as agents, and in the latter case to deposit a written authority signed by their principals, otherwise their bids may be rejected.

6. The sale shall be stayed, if the defaulters or any other person acting on their behalf or claiming an interest in the land, tender the full amount of the arrears of revenue with the interest and other charges, before the property is knocked down or give satisfactory proof that the amount of arrears, etc., has been paid up or furnish security under Section 170 of the Mysore Land Revenue Code.

7. Purchaser having completed the payment of the purchase money will, as soon as the sale has been confirmed, be placed in immediate possession, and the village will be registered in the name of the purchaser, and a certificate of sale signed and sealed by the Deputy Commissioner will be granted to him. It is to be distinctly understood that the Government are not responsible for errors of description and in estimated extent.

8. Provided, parties deeming themselves aggrieved by the sale shall be at liberty to appeal to the Government within ninety days from the day of sale, and the purchase shall be conditional on the final order in such appeal.

District	Taluk	Hobli	Village	Names of Jodidars	Estimated extent	Estimated gross rental or beriz	Quit-rent payable annually to Government	Arrears of Government revenue for which village is to be sold	Date of sale, etc.
					K. k. p.	Rs. a. p.	Rs. a. p.	Rs. a. p.	
Kolar	Srinivaspur	Yeldur	Jodi Pyarayyagaripalli	Nanjundabhatta and others	1 3 1	8 5 3	12 6 9	51 3 0	23rd July 1906. Srinivaspur Taluk Cutcherry.
					Boundaries. East—Ganganatha. West—Patamthakapalli. North—Pengasandra. South—Ganganatha.				

NOTE.—The sale is free from all tenures, encumbrances and rights created by the Jodidars or any of their predecessors in title or in any wise subsisting against them.

Notification dated 11th June 1906.

It is hereby notified for public information that the undermentioned Kayamgutta village, which has been duly attached in satisfaction of the arrears of revenue due to Government, (as shown in the subjoined statement) by the said Kayamguttadars, will be sold by public auction at the place and on the date mentioned in the annexed statement. The sale will commence at 11 A.M. on the date specified, and the village will be knocked down to the highest bidder without reserve.

2. Provided that, when a village is divided into separate recognized vrittis, the Deputy-Commissioner may, at his option, instead of selling the village as a whole, sell each vritti separately.

3. The purchaser will be required to deposit twenty-five per cent of the purchase money at the time of sale, and where the remainder of the purchase money may not be paid within fifteen days from the day of sale, the money so deposited shall be liable to forfeiture.

4. When such deposit shall not be made nor the remaining purchase money paid up, the lands shall be re-sold at the expense and risk of the first purchaser.

5. Persons bidding at the sale may be required to state whether they bid on their own account or as agents, and in the latter case to deposit a written authority signed by their principals, otherwise their bids may be rejected.

6 The sale shall be stayed, if the defaulters or any other person acting on their behalf or claiming an interest in the land, tender the full amount of the arrears of revenue with the interest and other charges, before the property is knocked down, or give satisfactory proof that the amount of arrears, etc., has been paid up or furnish security under Section 170 of the Mysore Land Revenue Code.

7. Purchaser having completed the payment of the purchase money will, as soon as the sale has been confirmed, be placed in immediate possession, and the village will be registered in the name of the purchaser, and a certificate of sale signed and sealed by the Deputy Commissioner will be granted to him. It is to be distinctly understood that the Government are not responsible for errors of description and in estimated extent.

8. Provided, parties deeming themselves aggrieved by the sale shall be at liberty to appeal to the Government within ninety days from the day of sale, and the purchase shall be conditional on the final order in such appeal.

District	Taluk	Hobli	Village	Names of Jodidars	Estimated extent	Estimated gross rental or beris	Quit-rent payable annually to Government	Arrears of Government revenue for which village is to be sold	Date of sale, etc.
Kolar	Bowringpet	Kyasamballi	Kayamgutta Peelavara	Muniramaiya and others	A. g. Peramboke 1,046 20 Dry ... 586 20 Wet ... 84 23 Garden ... 18 10 1,735 33	Rs. a. p. 32 12 0 471 10 0 492 11 0 99 0 0 1,096 1 0	Rs. a. p. 815 0 0	Rs. a. p. 475 0 0	23rd July 1906. Bowringpet Taluk Cutcherry

Boundaries.

East—Mittappalli and Attikuppa of His Majesty's Territory.
West—Sonnegowdanahalli and Nayinahalli of His Majesty's Territory.
North—Rajapete and Krishnarajapura of His Majesty's Territory.
South—Santhur of His Majesty's Territory.

NOTE.—The sale is free from all tenures, encumbrances and rights created by the Kayamguttadars or any of their predecessors in title or in any wise subsisting against them.

Notification dated 11th June 1906.

It is hereby notified for public information that the undermentioned jodi village, which has been duly attached in satisfaction of the arrears of revenue due to Government (as shown in the subjoined statement) by the said Jodidars will be sold by public auction at the place and on the date mentioned in the annexed statement. The sale will commence at 11 A. M. on the date specified, and the village will be knocked down to the highest bidder without reserve.

2. Provided that when a village is divided into separate recognized vrittis, the Deptuy Commissioner may, at his option, instead of selling the village as a whole, sell each vritti separately.

3. The purchaser will be required to deposit twenty-five per cent of the purchase money at the time of sale, and where the remainder of the purchase money may not be paid within fifteen days from the day of sale, the money so deposited shall be liable to forfeiture.

4. When such deposit shall not be made nor the remaining purchase money paid up, the land shall be sold at the expense and risk of the first purchaser.

5. Persons bidding at the sale may be required to state whether they bid on their own account or as agents, and in the latter case to deposit a written authority signed by their principals, otherwise their bids may be rejected.

6. The sale shall be stayed, if the defaulters or any other person acting on their behalf or claiming an interest in the land, tender the full amount of the arrears of revenue with the interest and other charges, before the property is knocked down or give satisfactory proof that the amount of arrears, etc., has been paid up or furnish security under Section 170 of the Mysore Land Revenue Code.

7. Purchaser having completed the payment of the purchase money will, as soon the sale has been confirmed, be placed in immediate possession, and the village will be registered in the name of the purchaser, and a certificate of sale, signed and sealed by the Deputy Commissioner, will be granted to him. It is to be distinctly understood that the Government are not responsible for errors of description and in estimated extent.

8. Provided, parties deeming themselves aggrieved by the sale shall be at liberty to appeal to the Government within ninety days from the day of sale and the purchase shall be condi tional on the final order in such appeal.

District	Taluk	Hobli	Village	Names of Jodidars	Estimated extent	Estimated gross rental or beriz	Quit-rent payable annually to Government	Arrears of Government revenue for which village is to be sold	Date of sale, etc.
					K. k. p.	Rs. a. p.	Rs. a. p.	Rs. a. p.	
Kolar	Bowringpet	Kyasamballi	Jodi Dodda Gandlahalli	Srinivasa Chakravarti and others	45 1 ¾	480 0 0	536 0 8	351 8 0	Bowringpet Taluk Cutcherry. 23rd July 1906.

Boundaries.

East—Bennavara.

West—Sanganahalli.

North—Yethurchinchandahalli.

South—Chogadapatti.

Note.—The sale is free from all tenures, encumbrances and rights created by the Jodidars or any of their predecessors in title or in any wise subsisting against them.

Notification dated 11th June 1906.

It is hereby notified for public information that the undermentioned Kayamgutta village, which has been duly attached in satisfaction of the arrears of revenue due to Government (as shown in the subjoined statement) by the said Kayamguttadars, will be sold by public auction at the place and on the date mentioned in the annexed statement. The sale will commence at 11 A.M. on the date specified, and the village will be knocked down to the highest bidder without reserve.

2. Provided that when a village is divided into separate recognized vrittis, the Deputy Commissioner may, at his option, instead of selling the village as a whole, sell each vritti separately.

3. The purchaser will be required to deposit twenty-five per cent of the purchase money at the time of sale, and where the remainder of the purchase money may not be paid within fifteen days from the day of sale, the money so deposited shall be liable to forfeiture.

4. When such deposit shall not be made nor the remaining purchase money paid up, the lands shall be resold at the expense and risk of the first purchaser.

5. Persons bidding at the sale may be required to state whether they bid on their own account or as agents, and in the latter case to deposit a written authority signed by their principals, otherwise their bids may be rejected.

6. The sale shall be stayed, if the defaulters or any other person acting on their behalf or claiming an interest in the land, tender the full amount of the arrears of revenue with the interest and other charges, before the property is knocked down or give satisfactory proof that the amount of arrears, etc., has been paid up or furnish security under Section 170 of the Mysore Land Revenue Code.

7. Purchaser having completed the payment of the purchase money will, as soon as the sale has been confirmed, be placed in immediate possession and the village will be registered in the name of the purchaser, and a certificate of sale signed and sealed by the Deputy Commissioner will be granted to him. It is to be distinctly understood that the Government are not responsible for errors of description and in estimated extent.

8. Provided, parties deeming themselves aggrieved by the sale shall be at liberty to appeal to the Government within ninety days from the day of sale, and the purchase shall be conditional on the final order in such appeal.

District	Taluk	Hobli	Village	Names of Kayamguttadars	Estimated extent	Estimated gross rental or beriz	Quit-rent payable annually to Government	Arrears of Government revenue for which the village is to be sold	Date of sale, etc.
					K. k. p.	Rs. a. p.	Rs. a. p.	Rs. a. p.	
Kolar	Bowringpet	Kyasamballi	Kayamgutta Panthanahalli	Seenappa, Ramireddi and others	962 2 0	841 4 0	375 15 7	281 5 7	23rd July 1906, Bowringpet Taluk Cutcherry.

Boundaries.

East—Dasarahalli of His Majesty's territory.

West—Thathepalli, Durgepalli.

North—Hulkur.

South—Jeedimakanahalli.

NOTE—The sale is free from all tenures, encumbrances and rights created by the Kayamguttadars or any of their predecessors in title or in any wise subsisting against them.

Notification dated 11th June 1906.

It is hereby notified for public information that the undermentioned Jodi village, which has been duly attached in satisfaction of the arrears of revenue due to Government (as shown in the subjoined statement) by the said Jodidars, will be sold by public auction at the place and on the date mentioned in the annexed statement. The sale will commence at 11 A.M. on the dates specified, and the village will be knocked down to the highest bidder without reserve.

2. Provided that when a village is divided into separate recognized vrittis, the Deputy Commissioner may, at his option, instead of selling the village as a whole, sell each vritti separately.

3. The purchaser will be required to deposit twenty-five per cent of the purchase money at the time of sale, and where the remainder of the purchase money may not be paid within fifteen days from the day of sale, the money so deposited shall be liable to forfeiture.

4. When such deposit shall not be made nor the remaining purchase money paid up, the lands shall be re-sold at the expense and risk of the first purchaser.

5. Persons bidding at the sale may be required to state whether they bid on their own account or as agents, and in the latter case to deposit a written authority signed by their principals, otherwise their bids may be rejected.

6. The sale shall be stayed, if the defaulters or any other person acting on their behalf or claiming an interest in the land, tender the full amount of the arrears of revenue with the interest and other charges, before the property is knocked down or give satisfactory proof that the amount of arrears, etc., has been paid up or furnish security under Section 170 of the Mysore Land Revenue Code.

7. Purchaser having completed the payment of the purchase money will, as soon as the sale has been confirmed, be placed in immediate possession, and the village will be registered in the name of the purchaser, and a certificate of sale signed and sealed by the Deputy Commissioner will be granted to him. It is to be distinctly understood that the Government are not responsible for errors of description and in estimated extent.

8. Provided parties deeming themselves aggrieved by the sale shall be at liberty to appeal to the Government within ninety days from the day of sale and the purchase shall be conditional on the final order in such appeal.

SCHEDULE.

District	Taluk	Hobli	Village	Names of Jodidars	Estimated extent	Estimated gross rental or beriz	Quit-rent payable annually to Government	Arrears of Government revenue for which village is to be sold	Date of sale, etc.
					K. k. p.		Rs. a. p.	Rs. a. p.	
Kolar	Bowringpet	Kyasamballi	Jodi Srinivasasandra	Ramachar and others	Dry ...17 9 7 Wet ...15 7 12½ Peramboke 10 6 9	400 0 0	210 0 0	241 12 0	23rd July 1906. Bowringpet Taluk Cutcherry.
					Boundaries. East—Nagakuppa. West—Bennavara. North—Konganahalli. South—Mulloor Krishnapura.				

NOTE.—The sale is free from all tenures, encumbrances and rights created by the Jodidars or any of their predecessors in title or in anywise subsisting against them.

C. SESHADRIENGAR,
for *Dy. Comr.*

IN THE COURT OF THE ASSISTANT COMMISSIONER AND 1ST CLASS MAGISTRATE, KOLAR GOLD FIELDS.

Property Form No. 45, dated 9th April 1906, from Champion Reefs Station.

A drum or thabala.

Notice is hereby given that the marginally noted property found lying by the road-side leading from Steven's Camp to Gwallapalli village on 22nd March 1906 and produced before Court on the 31st ultimo by the Police of Champion Reefs, will be sold and proceeds credited to Government if not claimed within six months from this date.

R. B. PLUMER,
1st Class Magistrate.

TUMKUR DISTRICT.

Notice dated 26th May 1906.

The attention of the public is invited to the notification of this date of the Forest Department issued in Part II of the official Gazette in pages 862-863 of 1906, regarding the sale of lac cultivation in the Tumkur District for 1906-08.

H. RAMIAH,
for *Dy. Comr.*

KADUR DISTRICT.

Notification dated 2nd June 1906.

It is hereby notified for general information that the exclusive privilege of collecting tangadi (*cassia auriculata*) and kakke (*cassia fistula*) barks in Government unoccupied lands in the undermentioned taluks of the Kadur District (excluding State Forests and Plantations situated therein), from 1st July 1906 to 30th June 1907, will be offered for sale by public auction by the Amildars in conjunction with the Range officers of respective taluks, on the dates and the places specified below :—

No.	Name of taluk	Date of sale	Place of sale
1	Chikmagalur	10—7—06	Taluk Cutcherry.
2	Kadur	13—7—06	Do
3	Tarikere	14—7—06	Do

NOTE.—The sale may be held by sammaths if considered necessary.

2. The auction will commence at noon on the above dates.

3. The sale will be subject to confirmation by the Deputy Commissioner.

4. Parties intending to bid must attend either in person or by duly accredited agents.

5. The successful bidder shall, at the close of the sale, deposit in cash or Government promissory notes endorsed to the Deputy Commissioner a sum equal to one-tenth of the total rental including local cess at one anna in the rupee. Should he fail to do so, the exclusive privilege will at once be re-sold.

6. Re-sale effected under the above para will be at the risk of the defaulting bidder, who will have no claim to any profit accruing at the re-sale. In the event of loss, the deficiency between the amount of his bid at the original sale and the amount payable by the successful bidder at the re-sale will be recovered from him as a revenue demand.

7. The successful bidder shall pay the rental and local cess thereon in full four equal monthly instalments in advance on the dates mentioned below. On failure to pay any of the khists on the due dates, the lessee shall forfeit the amount already paid by him, also his claims to work out the contract during the unexpired portion of it, and any balance due will be recovered as a revenue demand :—

1st khist, 31st August 1906.	3rd khist, 31st October 1906.
2nd khist, 30th September 1906.	4th khist, 30th November 1906.

The deposit prescribed by para 5 will be retained by Government as a security for the due fulfilment of the contract.

8. The purchaser shall, within three days from the date on which confirmation of the sale is communicated to him, execute and sign an agreement on proper stamp' paper, binding himself to observe the conditions published in para 9.

9. The successful bidder is required to conform to the following conditions :—

(1) Not to cut plants under one year old.

(2) The barked wood to be the property of the lessee.

(3) To keep accounts showing the quantity of bark removed in accordance with the lease and to permit inspection of such accounts by the Amildar or by any officer deputed by the Deputy Commissioner for the purpose.

(4) To obtain passes for consignments of bark in such manner as may be laid down by the Deputy Commissioner.

(5) To remove out of the limits of the taluks leased out to him, all bark cut, collected or stored, before the end of June 1906.

(6) In the event of breach of any of the above conditions, the lease is liable to be cancelled and all the unexported bark to be confiscated.

(7) Tangadi shrubs shall not be cut for the sake of leaves, manure or for firewood or any other purpose except the bark.

B. HEERASINGH,
for *Dy. Comr., Kadur Dist.*

Notice dated 4th June 1906.

The right of collecting fees at the weekly market in the Koppa Municipality for the official year, *i. e.*, from 1st July 1906 to the 30th June 1907, will be sold by public auction by the Amildar of Koppa at his office on Monday the 25th June 1906, at 11 A. M.

For further particulars please see Notification dated 14th June 1906, published at page 886 Part II of the *Mysore Gazette.*

V. KRISHNA RAO,
for *Presdt., Munl. Boards, Kadur Dist.*

CHITALDRUG DISTRICT.

Dated 20th May 1906.

It is hereby notified for general information that in consideration of deficient rainfall and consequent drought, Government have been pleased in their Proceedings No. 14086-8—Agri. 116-05-7, dated 1st May 1906, to remit in its entirety the Hulbanni amount for the year 1905-06 for the whole district and that under the sanction conveyed in the said Government Proceedings in the case of dry lands, the collection of khists in the undermentioned affected tracts of the district will be made in four instalments beginning from 1st May 1906 :—

Taluk.	*Hobli.*	*Village.*
Chitaldrug ...	Chitaldrug ...	1. Siddavanahalli.
		2. Ingaladahal.
		3. Kunchiganahal
		4. Pallavagere.
		5. Jampannaikenkote.
		6. Dyamavvanahalli.
		7. Gonoor.
		8. Kallenahalli
		9. Medakerepur.
		10. Chikkenhalli.
		11. Sajjankere.
		12. Mallapura.
		13. Pillekerenahalli.
Do ...	Hireguntanur ...	14. Vijapur.
		15. Talkunte.
		16. Ballekatte.
		17. Beeravara.
		18. Kariyammanahalli.
		19. Mallenahalli.
Do ...	Bharmasagar ...	20. Zelagodu.
		21. Adavigollarahalli.
		22. Ajjappanahalli.
		23. Bastihalli.
		24. Hullehal.
		25. Gowrammanahalli.
		26. Basavansivankere.

Taluk.	*Hobli.*	*Village.*
Chitaldrug ...	Turavanur ...	27 Turavanur. 28. Belagatta. 29. Chikjagalur. 30. Veeramedakerepura. 31 Baggalrangavvanhalli. 32. Ragalobanhalli. 33 Bommakkanhalli. 34. Hayakal. 35. Siddavandurga.
Challakere ...	Challakere ...	The entire hobli.
	Naikenhatti ...	The entire hobli.
Hosdurga ...	Budihal ...	1. Budihal. 2. Saderhalli. 3. Kachapura. 4. Vengalapura. 5. Harenahalli 6. Hulkenhalli. 7. Heggere. 8. Kadavagere. 9. Kainadu. 10. Nerlakere. 11. Naigere. 12. Somasandra. 13. Agrahara.
Davangere ...	Davangere ...	1. Kodihalli. 2. Dodbathi. 3. Kadlabal. 4. Arasapur. 5. Obajjihalli. 6. Malgondanhalli.
Do ...	Hadadi ...	7. Nagarasanhalli. 8. Kolenahalli. 9. Kanagondanhalli. 10. Jadaganhalli. 11. Mudihadadi. 12. Sirganahalli. 13. Ballur. 14. Batlagatte.
Jagalur ...	Jagalur ...	The entire hobli.
Harihar Sub-Taluk ...	Harihar ...	1. Pamenahalli. 2. Ditur. 3. Kurubanhalli. 4. Karlahalli. 5. Hottiganahalli. 6. Kenchanahalli. 7. Chikkabidare. 8. Salaganahalli. 9. Sarathi.
Do ..	Malebennur ..	10. Dhoolihole. 11. Kunibelalkere. 12. Ingalagondi. 13. Huleganhole. 14. Yalehole. 15. Adapur.

Abstract Notification dated——May 1906.

It is hereby notified that Jodi Agasanakallu and Hulegondi villages, Chitaldrug Hobli, Chitaldrug Taluk, will be sold by public auction in the office of the Amildar of the taluk on the 19th July 1906, on account of arrears of revenue due to Government.

For further particulars see page 868 of Part II of *Mysore Gazette* No. 23, dated 7th June 1906.

Abstract Notification dated 29th May 1906.

It is hereby notified for public information that Jodi Kasavanahalli village in the Bharmasagar Hobli of the Chitaldrug Taluk will be sold for arrears of Land Revenue due to Government on Monday the 9th July 1906, at the Chitaldrug Taluk Cutcherry.

For further particulars *vide* page No. 867, Part II of the *Mysore Gazette* dated 7th June 1906.

H. RAMANUJAIENGAR,
Dy. Comr.

IN THE COURT OF THE MUNSIFF AT NANJANGUD.

Miscellaneous Case No. 741 *of* 1905-06.

PRESENT.—S. SESHAGIRI RAO, ESQ., MUNSIFF.

In the matter of the estate of M. Subba Rao, late Municipal Overseer, resident of Nanjangud ... ... *Deceased.*

Lakshamma, wife of M. Subba Rao, resident of Nanjangud ... *Applicant.*

Whereas Lakshamma, the abovenamed applicant, claiming to be the wife of M. Subba Rao, deceased, has applied to this Court for a certificate under Regulation VII of 1901, to collect debts to the extent of Rs. 799 due to the estate of the deceased M. Subba Rao.

Notice is hereby given of the said application; and all the claimants to the estate of the said M. Subba Rao, deceased, are invited to appear before this Court on Wednesday the 11th July 1906, at 11 A.M., when the application of the said applicant will be heard and the right to the certificate determined.

Given under my hand and the seal of the Court, this 13th day of June 1906.

S. SESHAGIRI RAO,
Munsiff.

IN THE COURT OF THE SUBORDINATE JUDGE, SHIMOGA.

PRESENT.—S. VARADARAJA IYENGAR, ESQ., SUBORDINATE JUDGE.

Application No. 167 *of* 1905-06.

In the matter of the estate of Subbamma, wife of Annayya ... *Deceased.*

1. Manjabhatta, 2. Subbabhatta ... ... *Applicants.*

Whereas 1. Manjabhatta, 2. Subbabhatta, residents of Sadasivapura Agrahara (Tirthahalli Taluk), claiming to be the great grandsons of the said Subbamma, deceased, have applied to this Court for a certificate under Regulation VII of 1901, to collect debts payable in respect of the estate of Subbamma, deceased, resident of Humachakatta.

Notice is hereby given of the said application; and all claimants in the estate of the said Subbamma, deceased, are invited to appear in this Court on Friday the 20th day of July 1906, when the petition of the said Manjabhatta and Subbabhatta, applicants, will be heard, and the right to the certificate will be determined.

Given under my hand and the seal of this Court, this the 13th day of June 1906.

Miscellaneous Application No. 179 *of* 1905-06.

In the matter of the estate of Mandagadde Ranganna ... ... *Deceased.*

Thulachavva, widow of Mandagadde Ranganna ... ... *Applicant.*

Whereas Thulachavva, resident of Biranakere, Shimoga Taluk, claiming to be the wife of the said Mandagadde Ranganna, deceased, has applied to this Court for a certificate under Regulation VII of 1901, to collect debts payable in respect of the estate of Mandagadde Ranganna, deceased, resident of Biranakere.

Notice is hereby given of the said application; and all claimants in the estate of the said Mandagadde Ranganna, deceased, are invited to appear in this Court on Friday the 20th day of July 1906, when the petition of the said Thulachavva, applicant, will be heard, and the right to the certificate will be determined.

Given under my hand and the seal of this Court, this the 13th day of June 1906.

Mis. Application No. 180 *of* 1905-06.

In the matter of the estate of Honnali Balaji Row ... ... *Deceased.*

Savitriboyi *kom* Huchu Row minor, by guardian and father Sripati Row ... ... *Applicant.*

Whereas Savitriboyi, resident of Chintamani (Kolar District) claiming to be the daughter in-law of the said Honnali Balaji Row, deceased, has applied to this Court for a certificate under Regulation VII of 1901 to collect debts payable in respect of the estate of Honnali Balaji Row, deceased, resident of Shimoga.

Notice is hereby given of the said application; and all claimants in the estate of the said Honnali Balaji Row, deceased, are invited to appear in this Court on Friday the 20th day of July 1906, when the petition of the said Savitriboyi applicant, will be heard, and the right to the certificate will be determined.

Given under my hand and the seal of this Court, this the 13th day of June 1906.

S. VARADARAJA IYENGAR,
Subordinate Judge.

IN THE COURT OF THE MUNSIFF OF CHITALDRUG.

Insolvency Miscellaneous Case No. 595 *of* 1905-06.

In the matter of the application of Hottappa, son of Vobanayaka, resident of Abbina Hole praying to be declared an Insolvent.

The above application coming on for hearing before S. Krishna Rao, Esq., B.A., B.L., in the presence of Messrs. R. Srinivasa Rao for Mr. M. Raja Rao, A. Singrachar and B. Lakshminaranappa, pleaders for the petitioner, 1st counter-petitioner and 2nd counter petitioner, respectively, other counter petitioners being absent ex-parte, it is ordered that the said Hottappa be declared an insolvent and that Batni Sripathi Rao, the Deputy Nazir of this Court, be appointed as receiver of the insolvent's property.

Schedule of debts.

No.	Name of creditor	Amount	When contracted
		Rs.	
1	Dodda Virupakshappa, resident of Babur, Hiriyur Taluk ...	170	Due under a decree in O. S. No. 97 of 1902-03 on the file of the late Chitaldrug Munsiff's Court.
2	Channamma *kom* Gurupadayya, resident of Sidlayyanakote, Hiriyur Taluk ..	50	Due under a decree.
3	Government (Mr. H. Ramanuja Iyengar, Deputy Commissioner, Chitaldrug District)	250	Takavi amount due to Government.
4	Hanumegowda, resident of Gulya, Hiriyur Taluk	150	Due under a decree.
5	Gollara Giddajja, resident of Gollarhatti, Hiriyur Taluk	20	Due under a bond.

Given under my hand and the seal of the Court, this the 1st day of June 1906.

S. KRISHNA RAO,
Munsiff.

Notification dated 28*th May* 1906.

Many of the culverts on district roads not being designed to carry the heavy loads of steam rollers or traction engines, the transport of such heavy engines on these roads is attended with serious risk. Any intention therefore to move such engines on these roads should be notified beforehand to the Executive Engineer, Public Works Department, of the District, and his permission should be obtained before the engines are allowed to move on the roads.

J. J. WHITELEY,
Superintending Engineer, Eastern Circle.

WATER-SUPPLY AND STORES DIVISION.

Notification, dated 15*th June* 1906.

Notice is hereby given that sealed tenders will be received at the office of the Executive Engineer, Water-Supply and Stores Division, up to the 15th July 1906, for supply of 3,000 tons of jungle fuel to Pumping Station at Soldevanahalli. An approximate estimate of quantities is given below. These quantities are not guaranteed. The work should be completed by the end of June 1907.

2. The conditions may be seen at the Executive Engineer's office at Bangalore, between the hours of 11 A.M. and 5 P.M.

3. Tenders should be submitted on printed forms which may be obtained from the Executive Engineer. The tenders should be accompanied by a statement in the form given below, showing the rates at which the different items specified will be executed.

4. Each tender must be accompanied by a deposit of Rs. 500 in cash or Government Promissory notes, as earnest money, and be superscribed "tender for supply of jungle fuel to Pumping Station at Soldevanahalli," in default of which, tenders will be rejected.

5. The final acceptance of any tender will rest with the Chief Engineer, who does not bind himself to accept the lowest or any tender or to assign any reason whatever for the rejection of any tender.

6. Within eight days of the acceptance of the tender, the successful competitor will be required to execute the usual contract bond; in default of which, his tender will be considered cancelled, and his earnest money will be forfeited.

7. The name of the successful competitor, whose tender has been accepted, will be posted on the notice board in the Executive Engineer's office in due course. No enquiries regarding the acceptance or rejection of a tender will receive any reply.

8. On acceptance of one of the tenders, the earnest money on rejected tenders will be returned.

V. RUNGASWAMY IYENGAR,
Executive Engineer.

KOLAR DIVISION.

Notification dated 2nd June 1906.

The attention of the public is invited to the notification in the *Mysore Gazette* No. 23, dated 7th June 1906, calling for tenders for constructing quarters for the staff of the new Hospital at Robertsonpet on the Kolar Gold Fields. Each tender must be accompanied by a deposit of Rs. 1,000 in cash or Government Promissory Notes as earnest money.

K. KRISHNAIENGAR,
Executive Engineer.

MYSORE DIVISION.

Abstract.

Invites attention to the notification published in the *Mysore Gazette*, dated 31st May 1906, page 823, Part II, inviting tenders for repairing Kagalwadi tank, Registered No. 48, Chamrajnagar Taluk.

Notice dated 4th June 1906.

A sum of Rs. 107-6-11 (Rupees one hundred and seven, annas six and pies eleven) being the amount deposited as security, due to Taluk Mestri R. Guru Rao, deceased, is outstanding in the deposit accounts since May 1905.

The legal heir of the deceased is hereby informed that he should present himself before the undersigned with necessary certificate to receive payment of the amount within a month from the date of this notice. Failing to do so, the amount will be credited to Government as unclaimed

B. SUBBA RAO,
Executive Engineer.

MYSORE PALACE DIVISION.

Notification.

Notice is hereby given that sealed tenders will be received at the office of the Executive Engineer, Palace Division, at Mysore up to 10th July 1906, for the supply of pipes, valves, etc., required for the Water-supply and Fire Protection Scheme for the Palace at Mysore. An approximate estimate of quantities is given below. These quantities are not guaranteed. Prices to be quoted for delivery at Railway Station at Mysore, and delivery to be completed within two months from the date of acceptance of the tender.

2. The pipes should be in accordance with the specification given below. Separate tenders for steel pipes for 8″ main may also be forwarded.

3. Tenders should be submitted on printed forms, which may be obtained from the Executive Engineer. The tender should be accompanied by a statement in the form given below, showing the rates at which the different items specified will be executed.

4. Each tender must be accompanied by a deposit of Rs 300 in cash or Government promissory notes as earnest money, and be superscribed "Tender for the supply of pipes, bends, valves, etc., required for the Water-supply and Fire Protection Scheme for the Palace at Mysore," in default of which, tenders will be rejected.

5. The final acceptance of any tender will rest with the Chief Engineer, who does not bind himself to accept the lowest or any tender or to assign any reason whatever for the rejection of any tender.

6. Within eight days of the acceptance of the tender, the successful competitor will be required to execute the usual contract bond, in default of which, his tender will be considered cancelled, and his earnest money will be forfeited.

7. The name of the successful competitor, whose tender has been accepted, will be posted on the notice board in the Executive Engineer's office in due course. No enquiries regarding the acceptance or rejection of a tender will receive any reply.

8. On acceptance of one of the tenders, the earnest money on rejected tenders will be returned.

SPECIFICATION.

Pipes.—The whole of the pipes to be of uniform bore and thickness of metal throughout and of the full specified diameters. They must be of the best quality and perfectly free from sand, air-holes and defects of any kind. All pipes should have the depth of socket in accordance with the statement. All pipes should be properly rendered with Dr. Angus Smith's patent solution.

The whole of the pipes to be capable of standing a proof pressure equal to a head of 500 feet. Any pipes found defective after due examination by this Department, to be replaced at contractor's expense.

Valves.—All valve facings and spindle screws to be of the best gun-metal and all working parts to be delivered accurately finished, fitted and adjusted. Each sluice valve to be capable of standing the same pressure test as the pipes.

Approximate estimate of quantities of pipes, valves, etc., required for the Water-supply and Fire Protection Scheme for the Palace at Mysore.

Items of work	Per	Quantity				Approximate number required
		Tons	Cwt.	Qrs.	lbs.	
8″ main pipe from pure water tank of Mysore Town Water-supply to the storage tank at the Palace—						
Cast iron straight pipes 8″ diameter, pipes in 9′ lengths, with turned and bored spigot and socket joints in accordance with the above specification	141	8	1	7		767
Do with spigot and socket ends not turned and bored	35	8	...	...		192
Irregular pipes, bends of different angles 6′ length and 8″ diameter	1	2	2	...		15
8″ diameter T. pipe with 3″ diameter, single branch	...	4	2	...		2
Pipes 6′ in length with 8″ diameter, single branch	...	2	2	7		1
3″ branch to Jaganmohan Palace—						
3″ diameter pipes in 9′ lengths, with spigot and socket ends turned and bored ...	1	15	...	...		35
Irregular pipes 3″ diameter, ¼ bends ...	...	...	3	...		2
3″ diameter T. pipes with 3″ single branch.	...	...	5	...		2
Outside fire protection main—						
6″ diameter pipe in 9′ lengths with spigot and socket ends turned and bored ...	25	7	2	...		203
Irregular pipes, ¼ bends	...	12	1	4		16
Do ⅛ bends	...	2	..	...		2
T. pipes 6′ in length with 6″ single branch	1	4	...	...		12
Do do with 6″ double branch	...	4	2	...		2
Inside fire protection mains—						
3″ diameter pipes in 9′ lengths with spigot and socket ends turned and bored ...	8	18	...	...		178
Irregular pipes, ¼ bends	...	10	3	14		29
Do ⅛ bends	...	2	2	..		4
T. pipes 6′ in length with a single 3″ branch	...	11	3	4		19
8″ valves with 4 gun metal faces, gun metal screws, and nut stuffing box gland with 8″ diameter spigot and socket tail pieces fitted to flanges of valves with bolts and nuts, complete						...
Regulating valves						3
Scour valves						2
Air valves						1
Cast iron shutters for manholes or valve cisterns						10

STATEMENT OF CAST IRON PIPES.

Length of each pipe in feet	Diameter of pipe in inches	Thickness of metal in inches	Depth of socket in inches	Straight pipes: Turned and bored ends	Straight pipes: Ends not turned and bored	Straight pipes: Flanged at one end for expansion joints	Straight pipes: Average weight for each pipe: Cwts.	Straight pipes: Average weight for each pipe: Qrs.	Straight pipes: Average weight for each pipe: lbs.	Straight pipes: No. of cast iron pipes	Straight pipes: Total weight: Tons	Straight pipes: Total weight: Cwts.	Straight pipes: Total weight: Qrs.	Straight pipes: Total weight: lbs.	Irregular pipes	Approximate weight for each: Cwt.	Approximate weight for each: Qrs.	Approximate weight for each: lbs.	Number of pipes	Total weight: Tons	Total weight: Cwts.	Total weight: Qrs.	Total weight: lbs.	To be tested to proof	Permitted variation in weight of pipes
8″ Main line from pure water tank of the Water-supply of Mysore Town to the storage tank at the Palace.																									
9′	8″	$\frac{1}{2}$″	4″	767	192	...	3	2	21	959	176	16	1	7	Bends of different angles.	1	2	...	15	1	2	2	...		
															6-foot pipes with 8-inch single branch.	2	2	7	1	...	2	2	7		
															6-foot pipes with 3-inch single branch.	2	1	...	2	...	4	2	...		
3″ Branch to Jaganmohan Palace.																									
9′	3″	$\frac{11}{32}$″	$3\frac{1}{2}$″	35	.....	...	1	...	...	35	1	15	...	...	$\frac{1}{4}$ Bends	...	1	14	2	...	..	3	...		
															6-foot pipes with 3-inch single branch	...	2	14	2	...	...	5	...		
Outside fire protection system.																									
9′	6′	$\frac{7}{32}$″	$3\frac{1}{4}$″	203	...	...	2	2	...	203	25	7	2	...	$\frac{1}{4}$ Bends	...	3	2	16	...	12	1	4		
															$\frac{1}{8}$ Bend	1	...	...	2	...	2	...	...		
															6-foot pipes with 6-inch single branch.	2	...	...	12	1	4	...	...		
															Pipes with 6-inch double crossing.	2	1	...	2	...	4	2	...		

B. P. RAGHAVALU NAIDU,
Executive Engineer, Palace Division.

SHIMOGA DIVISION.

Abstract Notification dated 26th May 1906.

Any person having a claim to the amount of Rs. 14-14-6 referred to in this office proclamation dated 26th May 1906 published at page 874 of Part II of the *Mysore Gazette* dated 7th June 1906 should appear before the undersigned at Shimoga within six months from the date of the proclamation and prove his claim to the said amount. No claims preferred after the expiry of the said six months will be taken into consideration.

K. CHANDY,
Asst. Comr.

BANGALORE CITY MUNICIPALITY.

Revised Draft Bye-Law No. 3 for the purpose of regulating the levy and collection of Octroi duties in the Bangalore City.

It shall not be lawful for any person to sell, either by wholesale or retail, the following articles liable to Octroi without a license :—

1. Tobacco in any form. | 2. Betel-leaves.

For the purpose of this rule, the license fees shall be as follows :—

	Rs.	a.	p.	
Wholesale dealers	5	0	0	per annum.
Retail dealers	1	0	0	

Notice dated 16th June 1906.

The undermentioned gentlemen having consented to stand as Municipal Commissioners for II. Balepet Division, the voters of that Division are requested to present themselves at the Balepet Police Station on Tuesday the 3rd July 1906, from 8 to 10 A.M., and from 3 to 5 P.M., to give their votes to any two of the said gentlemen whom they desire to elect at the re-election that will be held there on the above date, as per notice dated 22nd May 1906, published in the *Mysore Gazette* dated the 31st May 1906, Part II, page 841.

Printed tickets will be issued to them for the purpose on the spot.

Serial No.	Number in the list published	Names	Place of residence
1	81	M. R. Ry. D. B. Ramachandra Mudaliar ...	1, Sowar Lines Road.
2	Supplemental List No. 2	,, B. Gangaiya ...	5, Kotige Lane.
3	152	,, K. H. Ramaiya, B.A. ...	97, Rangasamigudi Road.

Notice dated 16th June 1906.

The undermentioned gentlemen having consented to stand as Municipal Commissioners for III. Manavarthepet Division, the voters of that Division are requested to present themselves at the Government Girls' School (Chikpet) on Thursday the 5th July 1906 from 8 to 10 A.M., and from 3 to 5 P.M., to give their votes to any two of the said gentlemen whom they desire to elect at the re-election that will be held there on the above date, as per notice dated 22nd May 1906, published in the *Mysore Gazette* dated the 31st May 1906, Part II, page 841.

Printed tickets will be issued to them for the purpose on the spot.

Serial No.	Number in the list published	Names	Place of residence
1	145	M. R. Ry. B. Veerabhadra Chetty ...	181, Arlepet
2	53	,, B. K. Garudachar ...	479, Taluk Cutcherry Road.
3	131	,, S. N. Subba Rao ...	18, Subramanaiya's Street
4	Supplemental List No. 1	,, Dibbur Rudrappa ...	8, Dewan Surappa's Lane

A. S. NAGAVKAR,
President.

BOWRINGPET MUNICIPALITY.

Notice is hereby given that the contract for the exclusive right of collecting fees for slaughtering sheep and goats in the slaughter enclosure at Bowringpet (in the old Shandy ground) will be put up to public auction and sold to the highest bidder, at the Taluk Office, Bowringpet, at 11 A.M., on the 23rd June 1906.

The successful bidder will be required to deposit at once, in cash, or currency, one-fourth of the money, or his bid will be cancelled, and the right to collect fees for slaughtering animals re-auctioned, any loss to which the Municipal Board may be thereby put to be borne by the said bidder. The balance of the purchase money, etc., to be paid thereafter, in eleven (11) regular monthly instalments, commencing from the 1st August 1906.

The contractor will be called upon to enter into the following agreements with the Vice-President:—

(1) To slaughter only in the license slaughter-house or in such place as the Municipal Board may from time to time direct.

(2) To keep the slaughter enclosures clean and in sanitary condition to the satisfaction of the Sanitary Inspector or other officer of the Board.

(3) To remove all skins, carcasses, etc., immediately from the slaughter enclosures.

(4) To remove without delay all bones, horns and offal, from the slaughter enclosures and bury them in such place as may be pointed out by the Sanitary Inspector.

(5) The contractor will also be called upon to take charge of the slaughter enclosures on the 30th June 1906, and on the expiry of the contract to hand over the said slaughter enclosures to the Vice-President or such other officer as he may depute for the purpose, in good order and repair.

The undersigned reserves to himself the right to refuse any bid without assigning any reason.

Notice dated 1st June 1906.

Notice is hereby given that sealed tenders will be received up to 11 A.M. on 30th June 1906, by the Vice-President of the Bowringpet Municipality for the right to collect fees on grains, bullocks, sheep, vegetables, etc., at the weekly market in the Bowringpet Municipality for the year 1906-07.

Further details can be ascertained on application to the Vice-President.

C. SESHADRIENGAR,
for *President.*

MYSORE CITY MUNICIPALITY.

Notice dated 16th June 1906.

The following business will be transacted at the ordinary meeting of the Municipal Commissioners for the City of Mysore to be held in the Rangacharlu Memorial Hall at 8 A.M., on Friday the 29th June 1906:—

I. Consideration of accounts of receipt and expenditure with the auditor's report and other statistics for May 1906.

II. President's memo dated 29th May 1906, suggesting to obtain professional opinion as to whether steam pumps would not answer for supplying water to the City during the hot weather and times of scarcity of water in the river.

III. Docket No. 12341—Ml. (4780-05)-4, dated 30th May 1906, forwarding Chief Engineer's notes regarding the transfer of the water works to the Public Works Department with an annual expenditure of Rs. 17,000 as estimated by the Executive Engineer, Water Supply and Stores Division.

IV. Government Proceedings No. 12550-2—Ml. (322-05)-6, dated the 7th instant, sanctioning the retransfer of conservancy establishment working within the area under the operation of the Trust Board, to the management of the Municipality.

V. Application dated 19th May 1906, from A. B. Ramanna praying that under the circumstances explained in his petition, the rent levied for his occupying rooms in the compound of the Octroi Office for storing dutiable goods may be reduced.

VI. Application from Mr. M. Srinivasa Iyengar, Advocate, requesting to grant the building site to the south of Durbar Bakshi Mr. Lingaraj Urs' house in Chamaraj Pett.

VII. Application from Mr. M. Srinivasa Iyengar on behalf of Mr. S. Venkatavaradan Iyengar, District Judge, praying for the grant of the vacant site in front of his house near Subrayankere for being added on to his compound.

VIII. Deputy Commissioner's Kanarese yadast No. 4091, dated 25th May 1906, requesting to select four members for the ensuing Dasara Assembly.

IX. Health Officer's memo regarding the strengthening of the Conservancy Establishment of the City.

X. Sale list received from Mr. Sricuntiah, Municipal Commissioner, for having given on annual contract, the pasturage and fruit bearing trees of the Gutchi Matt.

XI. Docket No. 12448—Ml. (568-05)-2, dated 4th June 1906, from the Secretary, General and Revenue Department, requesting to submit the resolution of the Board *in re* the abolition of the post of Municipal Overseer, in connection with the appointment of a Collector proposed by the Board.

XII. Application from Mr. V. Lakshman Rao, Municipal Executive Engineer, requesting to raise his allowance to Rs. 30 for the reasons stated in his application.

XIII. Application from Venkata Raghavendra Dass, residing in Krishna Villas Agrahar, Devaraj Mohalla, claiming exemption from house tax on the houses behind the Prasanna Venkataramanaswami temple.

XIV. Application from P. Aiyasami Mudaliar, praying that he may be allowed to store timber in his factory and to pay Octroi duty only on the quantity sold.

XV. President's memo on the Government Proceedings No. (2904-5)-33-2—L. B., dated 7th September 1904, directing that tolls cannot be levied on the carts carrying timber which is the Government property.

XVI. Application from the inhabitants of Krishnaraj Mohalla praying for a grant-in-aid to one Lakshman Singh, who is practising as a native physician in the Mohalla.

XVII. Treasury Assistant Commissioner's memo No. 182, dated 12th June 1906, forwarding for consideration application from the Parpathegar of Busti temple seeking permission to raise a compound wall in front of Busti temple.

C. VENKATA RAO,
for *President.*

GOVERNMENT CENTRAL BOOK DEPOT, BANGALORE.

Notification dated 23rd May 1906.

The undermentioned books are available for sale at the Central Book Depot, Bangalore :—

	Rs.	a.	p.
Kannada Balabodhe, Part I	0	1	0
Do. Brief History of Mysore	0	2	6
Savitre Charitre	0	2	0

Notification dated 12th June 1906.

Copies of the Kannada Lower Secondary Text for 1906 are available for sale at the Government Central Book Depot. Price 3 annas a copy.

S. ABDUL HAI, *Curator.*

MYSORE CITY TELEGRAPH OFFICE.

List of undelivered messages for the month of June 1906.

Station from	Address
Tiruvallur, Madras	... Rangasamiengar, signaller.
Bibenogar, N.	.. Nowrojee Dittiya Natakwalla.
Bhavani	.. Thathiappa, Cloth Merchant, Parieapetai.

IN THE COURT OF THE DISTRICT JUDGE, CIVIL AND MILITARY STATION, BANGALORE.

Miscellaneous Application No. 106 *of* 1906.

Madam Gangappa, residing in Akkipete, Bangalore City, by his Advocate Mr. M. Bhima Rao ... ... *Applicant.*

In the matter of the last Will and Testament of Madam Venkatappa, late of Akkipete, Bangalore City, but now ... ... *Deceased.*

Whereas Madam Gangappa, son of the deceased above named, has applied to this Court for probate of the last Will and Testament of the said deceased who died in the Bangalore City on or about 30th day of November 1901, and Wednesday the 4th day of July 1906, at 11 A.M., has been fixed for the hearing of the application.

All persons claiming to have any interest in the estate of the deceased are hereby called upon to come and see the proceedings, on or before the said 4th day of July 1906.

Given under my hand and the seal of the Court this 11th day of June 1906.

P. S. KRISHNA RAO,
District Judge.

MYSORE GOVERNMENT METEOROLOGICAL DEPARTMENT.

Daily Means of Observations for the Week Sunday 3rd to Saturday 9th June 1906.

No.	BANGALORE	Sunday 3	Monday 4	Tuesday 5	Wednesday 6	Thursday 7	Friday 8	Saturday 9
1	Barometer red. to 32° F.	26·815	26·835	26·805	26·795	26·771	26·796	26·839
2	Daily Barometric range	·134	·121	·131	·114	·135	·095	·116
3	Mean Dry Temperature in shade	80·5	78·0	80·2	77·7	79·5	79.6	79·5
4	Maximum do	93·0	90·5	92·0	89·8	90·6	92·9	90·3
5	Minimum do	70·9	68 8	69·1	67·8	68·4	67·8	69·5
6	Daily range of do	22·1	21·7	22·9	22·0	22·2	25·1	20·8
7	Mean Wet Temperature in shade	70·4	71·7	69·9	69·8	70·2	68·0	69·1
8	Minimum do	67·1	67·8	66·3	66·1	67·1	64·9	66·4
9	Pressure of Aqueous Vapour	·643	·716	·617	·653	·624	·551	·594
10	Humidity	57	73	60	68	57	51	57
11	Wind Vely. in Miles p. day to 8 A. M	199	205	181	190	131	237	258
12	Mean Wind Direction	W b N	W b N	W	S W b S	S b E	S W	S W
13	Rainfall in inches to 8 A.M.	0	0·12	0	0·13	0	0	0
14	Total Rainfall from 1st January	3·52	3·64	3·64	3 77	3·77	3·77	3·77
15	Per cent of Cloudy Sky	73	80	77	43	30	40	30
16	Character of Weather	Fine passing clouds	Cloudy	Thunder storm	Thunder storm	Distant thunder	Fine passing clouds	Distant lightning

MYSORE GOVERNMENT METEOROLOGICAL DEPARTMENT.

Daily Means of Observations for the Week Sunday 3rd to Saturday 9th June 1906.

No.	MYSORE	Sunday 3	Monday 4	Tuesday 5	Wednesday 6	Thursday 7	Friday 8	Saturday 9
1	Barometer red. to 32° F.	27·308	27·309	27·292	27·287	27·271	27·295	27·348
2	Daily Barometric range	·127	·082	·104	·114	·100	·065	·110
3	Mean Dry Temperature in shade	79·5	79·9	78·9	76·6	75·3	77·7	78·6
4	Maximum do	93·7	88·9	89·7	91·0	88·5	87·8	89·6
5	Minimum do	71·4	71·7	70·0	68·7	68·9	69·5	69·0
6	Daily range of do	22·3	17·2	19·7	22·3	19·6	18·3	20·6
7	Mean Wet Temperature in shade	71·3	71·6	70·2	69·2	68·6	67·5	70·3
8	Minimum do	67·7	69·6	67·4	66·0	66·0	65·9	67·0
9	Pressure of Aqueous Vapour	·689	·673	·633	·640	·635	·538	·644
10	Humidity	68	64	62	67	70	55	63
11	Wind Vely. in Miles p. day to 8 A.M.	243	205	·412	316	228	336	365
12	Mean Wind Direction	S W b W	S W b W	S W b W	S W	S W b S	S W b W	S W b W
13	Rainfall in inches to 8 A.M.	0	0·03	0	0	0·18	0·12	0
14	Total Rainfall from 1st January	5·50	5·33	5·33	5·33	5·51	5·63	5·63
15	Per cent of Cloudy Sky	80	83	97	67	70	87	73
16	Character of Weather	Distant thunder	Cloudy	Distant thunder	Fine passing clouds	Fine passing clouds	Cloudy	Fine passing clouds

819

MYSORE GOVERNMENT METEOROLOGICAL DEPARTMENT.

Daily Means of Observations for the Week Sunday 3rd to Saturday 9th June 1906.

No.	HASSAN	Sunday 3	Monday 4	Tuesday 5	Wednesday 6	Thursday 7	Friday 8	Saturday 9
1	Barometer red. to 32° F.	26·779	26·774	26·765	26·742	26·718	26·751	26·814
2	Daily Barometric range	·120	·091	·100	·131	·115	·065	·087
3	Mean Dry Temperature in shade	76·6	76·6	77·5	76·7	77·1	77·1	75·7
4	Maximum do	88·8	88·1	89·4	90·4	88·4	89·2	87·2
5	Minimum do	68·8	68·1	68·3	67·4	66·6	67·3	67·3
6	Daily range of do	20·0	20·0	21·1	23·0	21·8	21·9	19·9
7	Mean Wet Temperature in shade	70·0	70·2	69·8	69·6	69·9	69·0	68·0
8	Minimum do	66·3	66·1	65·9	66·4	66·0	65·1	65·0
9	Pressure of Aqueous Vapour	·671	·696	·645	·631	·650	·591	·607
10	Humidity	68	71	64	62	62	56	65
11	Wind Vely. in Miles p. day to 8 A.M.	86	42	69	40	40	81	114
12	Mean Wind Direction	S W	S W b W	W N W	S E b S	S b E	S W b W	S W b W
13	Rainfall in inches to 8 A. M.	0·01	0·10	0	0	0·11	0	0
14	Total Rainfall from 1st January	2·95	3·05	3·05	3·05	3·16	3·16	3·16
15	Per cent of Cloudy Sky	87	70	77	47	63	67	67
16	Character of Weather	Distant thunder	Distant thunder	Distant thunder	Fine passing clouds	Thunder storm	Fine passing clouds	Fine passing clouds

820

MYSORE GOVERNMENT METEOROLOGICAL DEPARTMENT.

Daily Means of Observations for the Week Sunday 3rd to Saturday 9th June 1906.

No.	CHITALDRUG	Sunday 3	Monday 4	Tuesday 5	Wednesday 6	Thursday 7	Friday 8	Saturday 9
1	Barometer red. to 32° F.	27·389	27·408	27·382	27·364	27·328	27·354	27·406
2	Daily Barometric range	·157	·124	·148	·146	·123	·129	·101
3	Mean Dry Temperature in shade	83·7	78·7	81·6	76·9	82·7	82·0	81·6
4	Maximum do	95·5	92·3	92·2	91·2	92·1	93·6	93·0
5	Minimum do	72·7	72·3	71·1	93·1	73·8	70·9	71·9
6	Daily range of do	22·8	20·0	21·1	28·1	18·3	22·7	21·1
7	Mean Wet Temperature in shade	70·6	70·7	72·1	?	71·7	70·8	69·9
8	Minimum do	66·7	69·1	69·1	?	69·7	68·3	67·4
9	Pressure of Aqueous Vapour	·622	·677	·687	·618	·647	·621	·594
10	Humidity	55	68	65	56	55	56	53
11	Wind Vely. in Miles p. day to 8 A. M.	193	215	167	164	82	117	162
12	Mean Wind Direction	N W b W	N W b W	N W b N	N N E	S E b E	N E b E	W S W
13	Rainfall in inches to 8 A. M.	0	0 05	0·04	20·9	0	0·10	0
14	Total Rainfall from 1st January	2·47	2·52	2·56	4·65	4·65	4·75	4·75
15	Per cent of Cloudy Sky	63	73	70	20	43	27	53
16	Character of Weather	Fine passing clouds	Thunder storm	Thunder storm	Thunder storm	Fine passing clouds	Fine passing clouds	Distant thunder and lightning

Dated 15th June 1906.

J. COOK, *Director of Meteorology.*

821

Abstract Statement of Plague Cases and Deaths in the Mysore Province for the week ending Friday the 15th June 1906.

Place	During the week ending 15th June 1906		During the week ending 8th June 1906		Figures for the corresponding week of last year		Number of infected villages
	Attacks	Deaths	Attacks	Deaths	Attacks	Deaths	
Bangalore City	...	...	...	...	...	...	...
Mysore City	...	...	...	...	...	...	...
Bangalore District	..	..	...	...	7	7	...
Mysore District	...	...	...	...	...	...	...
Kolar District (excluding Gold Fields)	...	...	...	...	...	...	...
Kolar Gold Fields	...	...	...	...	...	...	..
Tumkur District	...	...	...	...	...	...	...
Hassan District	2	3	3	2	...	...	1
Chitaldrug District	...	...	...	...	...	...	...
Kadur District	...	...	1	1	...	...	2
Shimoga District	1	...	...	...	1	1	1
Total ...	3	3	4	3	8	8	4

T. S. NANJAPPA,
for *Offg. Sr. Surgeon & Sany. Comr., M. G.*

823

The Mysore Gazette.

Vol. 41.] PUBLISHED BY AUTHORITY. [No. 25.

BANGALORE, THURSDAY, JUNE 21, 1906.

PART III.

Legislative Measures and Rules thereunder.

Notification No. J. 3491—*Pol.* 108-05-21, *dated* 13*th June* 1906.

With reference to item (10) of Rule 1 of the Arms Rules of the 26th December 1905, the Government of His Highness the Maharaja are pleased to direct that each village patel be allowed to hold free of license only a single fire arm in virtue of his office, and that if he requires more he should apply for a license for such additional arms like any other person and abide by the orders of the District Magistrate in the matter.

By Order,
K. S. CHANDRASEKHARA AIYAR,
Dy. Secy. to Govt., Gen. & Rev. Dept.

824

The Mysore Gazette.

VOL. 41.] PUBLISHED BY AUTHORITY. [No. 25.

BANGALORE, THURSDAY, JUNE 21, 1906.

PART IV.

OFFICIAL PAPERS.

Season Report for the Week ending with the 24th Saturday in 1906 (*16th June* 1906).

District and Station.	Rainfall up to 8 A.M. on Saturday.					Price of food grains in seers per rupee and market fluctuations in prices of food grains.			
	This week.	Last ten years' average for the corresponding week.	Up to the end of the week from 1st January 1906.						
			This year.	Average of past ten years.	Excess (+) or defect (—) of column 4 compared with column 5.		This week.	Past week.	Past ten years fortnightly average.
1	2	3	4	5	6	7			
	I. c	I. c.	I. c.	I. c.	I. c.		Seers	Seers	Seers.
BANGALORE.									
Bangalore C. & M. Station ...	2 66	... ...	2 66	.. ...	.. ...	Rice, 2nd sort.	6·50	6·50	9·28
" City & Taluk...	4 31	.. 75	7 90	8 20	— 0 30	Ragi	15·00	15·00	21·83
Hoskote ...	1 96	... 52	3 80	7 99	— 4 19	Kulthi	10·50	10·75	...
Dodballapur ...	3 53	.. 40	5 24	8 43	— 3 19	Kadale	8·00	8·00	10·65
Nelamangala ...	1 31	... 35	4 91	7 43	— 2 52				
Kankanhalli ...	... 42	... 43	5 93	8 99	— 3 6				
Magadi ...	1 13	... 39	2 60	7 51	— 4 91				
Channapatna ...	2 6	... 16	6 13	8 16	— 2 3				
Anekal ...	2 49	... 63	7 82	9 85	— 2 3				
Devanhalli ...	1 85	... 48	4 8	7 88	— 3 80				
Closepet ...	... 64	... 32	5 88	8 67	— 2 79				
District average...	1 97	.. 44	5 43	8 31	— 2 88				
KOLAR.									
Kolar ...	1 85	... 49	4 8	6 75	— 2 67	Rice, 2nd sort.	7·50	7·25	9·40
Bowringpet ...	1 13	... 25	3 54	6 86	— 3 32	Ragi	15·00	15·00	24·30
Chintamani ...	2 94	... 35	4 8	5 82	— 1 74	Kulthi	12·50	12·00	...
Mulbagal ...	1 84	... 59	5 95	5 80	+ 0 15	Kadale	9·00	9·00	9·30
Sidlaghatta ...	2 82	... 35	4 69	6 82	— 2 13				
Chikballapur ...	3 32	... 52	8 55	8 18	+ 0 37				
Bagepalli ...	3 82	... 72	5 70	4 20	÷ 1 50				
Goribidnur ...	3 20	... 40	5 87	5 34	+ 0 53				
Malur ...	2 67	... 36	7 27	7 34	— 0 7				
Srinivaspur ...	2 22	... 30	4 69	7 3	— 2 34				
Gudibanda ...	5 91	... 14	9 24	4 55	+ 4 69				
District average...	2 88	.. 40	5 79	6 24	— 0 45				
TUMKUR.									
Tumkur ...	1 69	... 81	4 76	9 4	— 4 28	Rice, 2nd sort.	7·00	7·00	9·40
Maddagiri ...	... 56	... 60	3 ...	5 74	— 2 74	Ragi	13·00	13·00	25·80
Chiknayakanhalli ..	1 34	... 80	4 72	8 73	— 4 1	Kulthi	11·50	11·50	...
Sira ...	3 6	... 52	5 52	6 93	— 1 41	Kadale	7·00	7·00	9·58
Gubbi ...	1 30	... 44	3 39	6 70	— 3 31				
Tiptur ...	... 35	... 44	1 34	8 63	— 7 29				
Pavagada ...	2 61	... 69	4 11	4 75	— 0 64				
Kunigal ...	1 39	.. 54	5 50	6 72	— 1 22				
Koratagere ...	3 53	.. 26	6 6	5 70	+ 0 36				
Turuvekere ...	... 60	... 22	4 12	6 91	— 2 79				
District average...	1 64	... 53	4 25	6 98	— 2 73				

District and Station.	Rainfall up to 8 A. M. on Saturday. This week.		Last ten years' average for the corresponding week.		Up to the end of the week from 1st January 1906. This year.		Average of past ten years		Excess (+) or defect (—) of column 4 compared with column 5.		Price of food grains in seers per rupee and market fluctuations in prices of food grains.			
1	2		3		4		5		6		7			
	I.	c.	I.	c.	I.	c.	I.	c.	I.	c.		This week. Seers.	Past week. Seers.	Past ten years' fortnightly average. Seers.
MYSORE.														
Mysore ...	...	..	...	48	6	76	8	43	—1	67				
Chamrajnagar ...	...	6	...	62	2	97	11	38	—8	41				
Seringapatam ...	...	14	...	52	4	94	7	30	—2	36	Rice, 2nd sort.	7·50	7·12	9·88
Hunsur ...	1	53	1	40	6	19	10	24	—4	5	Ragi	12·00	12·00	21·29
Yedatore ...	...	..	...	58	4	55	8	30	—3	75	Kulthi	11·00	11·00	...
Heggaddevankote ...	...	9	1	31	3	83	13	52	—9	69	Kadale	9·00	9·00	10·43
Gundlupet ...	...	...	...	44	6	9	8	69	—2	60				
Nanjangud ...	...	45	...	54	3	44	8	48	—5	4				
T.-Narsipur ...	...	44	1	3	4	43	9	83	—5	40				
Malvalli ...	...	26	...	27	3	67	7	35	—3	68				
Mandya ...	...	..	...	32	4	90	7	91	—3	1				
Krishnarajpete ...	...	...	..	51	5	65	8	97	—3	32				
Nagamangala ...	..	11	...	28	6	1	6	92	—0	91				
District average...	...	24	...	64	4	88	9	3	—4	15				
HASSAN.														
Hassan ...	...	10	1	32	3	39	9	47	—6	8				
Manjarabad (Saklespur)	1	39	5	30	8	6	13	84	—5	78				
Arkalgud ..	...	32	...	89	7	71	8	67	—0	96				
Belur ...	...	18	1	84	6	80	10	5	—3	25	Rice, 2nd sort.	8·00	8·00	10·41
Channarayapatna ...	...	...	...	44	5	79	8	8	—2	29	Ragi	16·00	16·00	24·86
Arsikere ...	...	69	...	43	3	48	7	78	—4	30	Kulthi	10·50	10·00	...
Hole-Narsipur ...	...	...	..	54	8	11	7	40	+0	71	Kadale	8·50	8·00	9·80
Alur ...	...	...	1	72	2	92	8	90	—5	98				
District average...	...	34	1	56	5	78	9	27	—3	49				
SHIMOGA.														
Shimoga ...	...	28	1	97	5	83	8	42	—2	59				
Channagiri ...	...	47	1	32	2	46	6	77	—4	31	Rice, 2nd sort	7·75	7·70	12·03
Honnali ...	...	...	..	65	4	77	7	91	—3	14	Ragi	13·37	13·00	28·48
Shikarpur ...	...	22	1	64	2	30	7	39	—5	9	Kulthi	10·25	9·50	...
Sorab ...	...	65	4	3	3	60	8	26	—4	66				
Sagar ...	1	92	4	65	6	83	9	89	—3	6				
Nagar (Kallurkatte) ..	1	35	7	18	3	4	11	19	—8	15				
Tirthahalli ...	2	13	6	69	6	47	12	35	—5	88				
Kumsi ...	...	80	2	85	2	95	8	70	—5	75				
District average...	..	87	3	44	4	25	8	98	—4	73				
KADUR.														
Chikmagalur ...	...	76	2	...	7	61	10	90	—3	29				
Kadur ...	...	26	...	57	2	87	7	6	—4	19	Rice, 2nd sort	7·50	7·50	10·17
Tarikere ...	...	9	1	42	4	15	9	35	—5	20	Ragi	14·00	14·00	23·90
Koppa ..	1	59	8	66	7	40	15	70	—8	30	Kulthi	9·00	9·00	...
Mudgere ...	1	14	7	69	5	97	17	24	—11	27	Kadale	8·00	8·00	10·05
Yedahalli ...	..	89	3	47	4	93	10	85	—5	92				
Sringeri ...	3	10	12	25	8	95	19	75	—10	80				
District average ..	1	12	5	15	5	98	12	98	—7	00				
CHITALDRUG.														
Chitaldrug ...	2	29	1	40	7	...	5	98	+1	2				
Challakere ...	1	68	...	62	2	..	5	13	—3	13	Rice, 2nd sort	7·50	7·50	10·50
Hiriyur ...	2	44	...	93	6	29	5	21	+1	8	Ragi	14·00	14·00	27·10
Holalkere ...	..	88	1	12	2	76		51	—3	78	Kulthi	10·00	10·00	...
Davangere ...	...	73	1	37	5	12	7	1	—1	89	Kadale	8·00	8·00	10·50
Molakalmuru ...	2	42	...	57	4	84	6	40	—1	56	Cholum	12·00	12·00	23·90
Jagalur ..	1	94	..	81	3	97	7	...	—3	3				
Hosdurga ..	...	32	...	69	3	62	5	53	—1	91				
Harihar ..	...	29	1	35	7	7	6	18	+0	59				
District average...	1	44	..	98	4	79	6	10	—1	47				
Provincial average...	1	31	1	64	5	13	8	49	—3	36				

Note—Rice (husked)—Oryza Sativa,
Ragi—Eleusine Corocana.
Kulthi—(Horse gram) Dolichos Biflorus.
Cholum—Sorghum Vulgare.
Kadale—(Bengal gram) Ciser Arietinum.

DISTRICT REPORTS.

8. Markets how supplied.

9. Progress of agricultural operations, state of standing crops, prospects and probable outturn of harvests, serious damage done to crops by insects or other natural calamities.

10. Prospects of season, tracts in which the rainfall has been insufficient, areas affected by scarcity, number of people under relief, and state of food stocks.

11. Public health.

12. Remarks as to the condition of agricultural stock, failure of pasturage of fodder, etc.

BANGALORE CIVIL AND MILITARY STATION.

		Normal.	*Current.*	
Prices of food grains—	Rice	... 10 to 11	6½ to 7	seers per rupee.
	Ragi	... 25 to 30	15 to 16	

Agricultural operation—Ploughing.

Cattle are in good condition. Water and fodder sufficient.

BANGALORE CITY AND TALUKS.

8. Market well supplied. Prices steady.

9. Ploughing is vigorously carried on throughout the district. Sowing has begun in some parts. Twenty acres are sown with punaji paddy in Bangalore. In Hoskote 20 acres are sown with cholum, 75 acres with haraka and some parts with sessamum. In Channapatna 430 acres are sown with sugar-cane and some parts with haraka and cholum. In Anekal haraka, punaji paddy and sessamum are reported to have been sown in some parts. There has been no harvest during the week. Standing crops are in good condition, except in Closepet where the sugar-cane crop is reported to be suffering from want of sufficient water.

10. Prospects of the season are slightly better. There has been rain throughout the district. Insufficiency of rain is reported only in Closepet. Tanks have received from two to four months' supply of water, except in Magadi and Closepet where they have received from one to two months' supply and in Channapatna one to three months' supply.

11. Public health generally good.

12. Cattle healthy. Water and dry fodder are sufficiently available. Difficulty of fodder is still reported to continue in Closepet.

KOLAR.

8. Market fairly supplied. Prices high.

9. Samé in Kolar, Bowringpet and Mulbagal; haraka in Kolar and Mulbagal, and paddy in Kolar are being sown. Paddy is being harvested in parts of Sidlaghatta and Goribidnur.

10. Prospects of the season are encouraging, more especially in Gudibanda range. Food stocks are available in moderate quantities.

11. Public health generally good.

12. Cattle now find some water and pasture. Their condition is improving and may be expected to be bettered by the recent rains.

TUMKUR.

8. Market well supplied.

9. Sugar-cane in Tumkur, Gubbi and Kunigal; paddy in Maddagiri, Sira, Kunigal and Turuvekere; and cholum in Sira are being harvested. Black and green grams, til and cholum in Chiknayakanhalli and Tiptur; haraka, castor, togari and til in Sira; cholum, green gram, paddy and haraka in Gubbi; castor, haraka, togari and ragi in Pavagada; til, cholum, castor and haraka in Kunigal; castor in parts of Koratagere; and cholum, paddy, and haraka in Turuvekere are sown. Standing Vysakhi paddy, sugar-cane, cholum and nat-ragi are in fair condition in all the taluks. Cocoanut trees in Tiptur are said to be withering. The estimated outturn of crops harvested is as follows:—

Maddagiri—Paddy 8 annas.
Sira—Paddy 4 to 8 annas, cholum 2 to 4 annas.
Kunigal—Paddy 4 to 8 annas.
Turuvekere—Paddy 4 annas.

10. Prospects of the season are looking better. Food stocks are available for the present. The recent rains have provided some water for men and cattle all over the district, except some few miles round Maddagiri.

11. Public health generally good, except that small-pox and fever prevail in parts of Tiptur.

12. The condition of cattle is improving. In Maddagiri, Chiknayakanhalli and Sira, date leaves are still used as fodder for cattle.

MYSORE.

8. Market well supplied.

9. Standing crops, such as sugar-cane, cholum, til, black and green grams in parts of Seringapatam; ragi, cholum and black and green grams in parts of Yedatore; cholum and til in parts of T.-Narsipur; and sugar-cane, mulberry, cholum, til and togari in parts of Malvalli are reported to be pretty fair. They are reported to be withering for want of rain in parts of Heggaddevankote, T.-Narsipur, Mysore, Chamrajnagar, Gundlupet and Nanjangud. Lands in parts of Hunsur are being ploughed and sown with ragi. Paddy is being sown in lands under channels in Krishnarajpete.

10. Prospects of the season not bad. But standing crops are in urgent need of rain, which is anxiously awaited. Food stocks are sufficient for the present.

11. Public health generally good, but small-pox still prevails in parts of Heggaddevankote.

12. Cattle healthy in all parts, except in parts of Heggaddevankote, where they are reported to be still suffering from foot and mouth disease. Water and fodder available in limited quantities. In Kowlandi Hobli of Nanjangud, cattle are fed on date and other leaves for want of fodder.

HASSAN.

8. Market fairly well supplied. Prices high.

9. Sowing is going on in all parts. Sugar-cane in Belur and Hole-Narsipur; and paddy and ragi in Manjarabad and Arkalgud are reported to be in fair condition. But they are withering in other parts. The outturn of standing crops in Hole-Narsipur is estimated at 8 annas.

10. Prospects of the season hopeful. More rain is wanted in all parts. Food stocks are sufficient for the present.

11. Public health generally good. Small-pox is reported to still exist in parts of Hassan, Manjarabad, Arsikere and Channarayapatna.

12. Cattle generally healthy, but foot and mouth disease exists in parts of Manjarabad and Hole-Narsipur. Water and fodder are generally available except in parts of Arsikere.

SHIMOGA.

8. Market well supplied. Prices high.

9. Kar-paddy has been completely harvested in Sagar and it is being harvested in Nagar. Paddy is being sown in Sagar, Nagar and Sorab. Paddy and sessamum are sown in a few tracts of Shimoga and ragi and cholum in parts of Channagiri. Sugar-cane is in a fair condition in parts of Shimoga, Sorab, Sagar and Nagar, where rain has fallen, and in a good condition under the Sulekere tank in the Channagiri Taluk. Ploughing is going on in Shimoga, Honnali, Shikarpur and Tirthahalli.

10. More rain is wanted in all the taluks. Food stocks are somewhat insufficient in Shimoga, Shikarpur, Sorab and Honnali. Rice continues to be imported from the Madras Presidency into the several parts of the district.

11. Public health is generally good. Cholera prevails in parts of Shimoga, Shikarpur, Sagar, Nagar, Honnali, Sorab and Kumsi and small-pox in parts of Sagar, Sorab and Channagiri.

12. Supply of fodder is limited in Honnali, Shikarpur and Sorab. Pasture is springing up in parts, where there has been rain. Scarcity of water has not yet materially diminished.

KADUR.

8. Market fairly well supplied.

9. Ploughing is over in parts and is in progress in other parts. Paddy and ragi in parts of Mudgere; paddy and gingelly in parts of Tarikere; cholum, gingelly, coriander, castor, black and green grams and tadagani in parts of Kadur, and ragi, paddy and coriander in Chikmagalur are being sown. Standing sugar-cane crops in parts of Chikmagalur, Yedahalli, Kadur, Tarikere and Koppa, and kar-paddy in parts of Koppa are in fairly good condition. Sugar-cane is being harvested in Kadur.

10. Prospects of the season fair, but more rain is needed. Food stocks are available and sufficient for the present.

11. Public health generally good, except that small-pox prevails in parts of Chikmagalur, Mudgere, Yedahalli and Tarikere.

12. Cattle generally healthy but poor in condition in parts of Tarikere and Kadur. Water and fodder generally available. Green grass is springing up in parts where there were good showers.

CHITALDRUG.

8. Market well supplied.

9. The rains have been very beneficial during the week, and it is reported that ploughing operations are being pushed on. Sessamum, cholum, castor and black and green grams have begun to be sown in several parts of the district.

10. Prospects of the season fair. Food stocks are available.

11. Public health good.

12. Cattle healthy. Water and fodder available.

BANGALORE,
20th *June* 1906.

P. G. D'SOUZA,
for *Secy. to the Govt. of H. H. the Maharaja of Mysore, Gen. & Rev. Dept.*

RAINFALL TABLE OF THE MYSORE STATE

For the month of May 1906.

Rainfall Table of the Mysore State

Meteorological Division	District	Station	1	2	3	4	5	6	7	8	9	10	11	12	13	14	15	16	17	18	19	20	21
MYSORE	Bangalore	Bangalore	...	...	...	...	...	0·10	...	...			...	...	0·08	0·13	0·56	...	...	0·06	...	...	...
		Hoskote	...	...	...	...	...	...	0·09	...	0·10	...	...	...	0·10	0·20	0·12	...	...	0·04	...	...	...
		Dodballapur	...	...	...	...	...	...		...	...	...	...	...	...		0·30	...	...	...	...	...	...
		Nelamangala	...	...	...	...	...	...	...	...	0·14	...	...	...	...	0·33	0·10	...	...	...	...	...	...
		Kankanhalli	...	...	...	...	...	...		...	1·16		...	...	...	0·50	0·80	...	...	...	...	...	...
		Magadi	...		...	...	...	...	0·04	...	...	...	...	...	...			0·15	...	...	...	...	...
		Closepet	...	...	...	...	...	...	0·66	...	0·35	...		...	...	0·99	0·75	...	...	0·68	...	...	...
		Anekal	...	...	...	...	...	...	...	...	0·25	...	...	...	...	0·17	0·93	...	...	...	...	...	...
		Devanhalli	...	...	...	...	...	...	...	...	...	...	...	...	...	0·12	0·36	...	...	...	...	...	...
		Channapatna	...	...	...	...	...	...	0·64	...	0·15	...	...	...	...	1·80	0·26	...	...	0·45	...	...	...
	Kolar	Kolar	...	...	...	...	...	...	...	...	0·48	...	...	...	...	...	0·15	...	...	...	...	...	
		Bowringpet	...	...	...	...	...	...	0·12	...		...	...	...	...	0·11	1·27	...	...	...	...	...	...
		Chintamani	...	...		...	...	...	...	...		...	...	...	...	...		...	...	...	...	...	...
		Mulbagal	...	...	...	...	...	...	...		...	...		...	...	...	0·13	...	...	...	...	...	...
		Sidlaghatta	...	...	...	...	...	...	...	...	...	...	...	...	...	...	...	...	...	...	...	...	...
		Chikballapur	...	...	...	...	...	...	...	...	...	...	...		...	...	0·58	...		...	...	...	...
		Bagepalli	...	...	...	...	...	...	...	...	0·23	...	...	...	...	...	...	...	...	...	...	...	0·33
		Goribidnur	...	...	...	...	...	...	...	...	0·06	0·16	...	...		0·04		...	...	0·09	...	...	...
		Malur	...	...		...	...	...		...	0·11		...	...	...	0·54	0·42	...	...	...	...	...	...
		Srinivaspur	...	...	...	...	...	...	...	...	0·04		...	...			0·15	...	...	...	...	...	...
		Gudibanda	...	...	...	...	...	...	...	...		0·11	...	...		0·35	...	...	...	...	...	...	...
	Tumkur	Tumkur	...	...	...	...	...	...	...	...	0·07	...	0·03	0·12	0·40	...	...	...	...	...	...	...	...
		Maddagiri	...	...	...	...	...	...		...	0·20	...	0·23	...	0·17	...	...	...	...	...	...	...	...
		hiknayakanhalli	...	...	...	...	...	...	0·10	...	...	...	...	...	0·25	...	...	...	...	...	...	...	...
		Sira	...	...	...	...	...	...	0·16	...	...	...	...	...	0·28	...	...	...	...	...	...	...	...
		Gubbi	...	...	...	...	...	...	...	...	0·10	...	...	0·06	0·19	...	1·07	...	...	...	...	...	...
		Tiptur	...	...	...	...	...	...	...	...	0·33	...	...	0·08	0·06	...	...		...	...	...	...	...
		Pavagada	...	...	...	...	...	...	...	...	...	...	...	...	...	...	...	...	...	...	...	...	...
		Kunigal	...	...	...	...	...	...	...	...	0·17	...	...	...	0·46	1·80	0·21		...	...	...	...	...
		Koratagere	...	...	...	...	...	...		...	...	...	...	...	...	...	...	...	...	...	...	...	...
		Turuvekere	...	...	...	...	...	...	...	...	0·85	...	...	...	...	0·60	...	...	...	...	...		...
	Mysore	Mysore	...	...	...	0·06		...	0·52	...	...	0·04	0·07	2·09	0·18	0·06	...	0·02	...	...	...	...	...
		Chamrajnagar	...	0·17	...	...	...	...		...	...	...	...	...	...	1·16	0·18	0·57	...	...	0·10	...	...
		Seringapatam	...	...	...	...	...	...	0·45	...	0·22	...	...	...	0·52	0·61	...	0·26	...	...	...	...	...
		Hunsur	...	...	...	...	...	...	1·92	...	0·13	...	...	0·30	0·46	...	...	...	...	...	...	...	...
		Yedatore	...	...	...	0·50	...	...	0·28	...	0·15	...	0·12	0·71	0·10	0·30	0·03	...	...	...	...	...	...
		Heggaddevankote	...	...	...		...	...	1·38	...	...		...	0·61	0·81	...	...	0·10	...	...	...	...	...
		Gundlupet	...	...		...	...	...	0·62	...	...	0·45	...	...	1·97	...	...	0·18		...	...	...	0·10
		Nanjangud	...	...	...	0·20	...	...	0·12	...		...	...	0·23	...	0·57	0·07	0·45	...	...	...	...	...
		T.-Narsipur	...	...	...	...	...	...	0·31					1·11	...	...	0·45	...	...	...	...	...	...
		Malvalli	...	...	...	...	...	...	0·60	...	0·14	...	...	0·17		0·14	...	...	...	0·32	...	...	...
		Mandya	...	...	...	...	...	...				...	...	0·55		1·38		...	...	...	...	...	...
		Krishnarajpete	...	...	...	...	...	...	0·20	...	0·60	...	0·10	...	0·35	0·75	0·15	...	...	...	...	...	...
		Nagamangala	...	...	...	...	...	...	...	0·36	0·33	0·03	...	...	1·72	0·90	1·10	...	...	...	...		...
	Hassan	Hassan	...	...	0·09	...	...	...	0·44	0·05	0·37	...	0·27	...	0·07	0·64	...	...	...	...	...	...	...
		Manjarabad	...	...	0·21	...	...	...	0·07		0·17	...	0·45	...	1·43	0·42	...	0·01	...	...	...	...	...
		Arkalgud	...	...	...	...	...	...	0·45	0·28	0·20	0·15		...	0·36	0·10	...	...	...	...	...	...	...
		Belur	...	...	...	...	...	...	...		0·45		0·25	...	1·10	...		0·75	...	...	...	...	...
		Channarayapatna	...				...	...	0·22	0·05	0·10	...	...	...	0·97	...	0·15	...	...	...	...	...	...
		Arsikere	...	...	...	...	...	...	...	...	0·46	...	0·31	...	0·69	...	0·05	...	...	...	...		...
		Holé-Narsipur	...	...	...	...	...	...	0·75	1·34	0·55	...	0·35	...	0·63	...	0·10	...	...	...		...	...
		Alur	...	...	0·09	...	...	...	0·20	0·10	0·10	...	1·09	...	0·09	0·05	...	...	...	...	...	...	...
	Shimoga	Shimoga	...	...	...	...	...	...	0·30			...	3·50	...	...	...	...	...	...	...	...	...	...
		Channagiri	...	...	...	...	...	...	0·05	...	...	...	1·02	...	0·60	...	...	...	...	...	...	...	...
		Honnali	...	...	...	...	...	...	...	...	...	...	0·85	...	...	...	...	...	...	...	...	...	...
		Shikarpur	...	...	...	...	...	...				...	0·38	...	...	...	...	...	...	...	...	...	...
		Sorab	...	...	...	...	...	...	0·04	...	...	...	...	...	...	0·05	...	...	...	...	...	...	...
		Sagar	...	...	...	...	...	...		...		...	0·25	...	...	...		...	...	...	...	...	...
		Nagar	...	...	0·10	...	...	...	...	...		...	0·25	...	...	...	...	...	...	...	...	...	...
		Tirthahalli	...	...	...	...	...	...	0·11		...	...	0·37		...	...	...	...	...	...	...	...	...
		Kumsi	...	...	...	...	...	...	...	...	...	...	1·25	...		...	...	...	...	...	...	...	...
	Kadur	Chikmagalur	...	...	0·07	...	...	...	...	...			0·26	...	1·14	...	...	...	...	...	...	...	...
		Kadur	...	...	...		...			...	...	...	...	...	1·45	...	...	...	...	...	...	...	...
		Tarikere	...	...	...	...	...	...	0·06	...	...	...	0·12	...	2·10	...	...	...	...	...	...	...	...
		Koppa	...	...	...	...	...	0·06	1·46	...	...	...	...	...	0·87	...	...	...	...	...	...	...	...
		Mudgere	...	...	0·08	...	...	...	0·15	...	...	...	...	...	2·25		...	...	...	...	...	...	...
		Yedahalli	...	...	...	...	...	...	1·23	...	...	...	0·20	...	0·55	...	...	...	...	...	...	...	...
		Sringeri	...	...	...	...	...	...	1·07	...	...	...	0·05	...	2·26	...	...	...	...	...	...	...	...
	Chitaldrug	Chitaldrug	...	...	...	...	...	...	0·11		...	...	0·79		0·33	...	...	...	...	...	...	...	...
		Challakere	...	...	...	...	...	...	...	...	...	...	0·04	...	...	...	...	...	...	...	...	...	...
		Hiriyur	...	...	...	...	...	...	...	...	...	...	0·11	...	1·37	...	0·10	...	...	...	...	...	...
		Holalkere	...	...	...	...	...	...	...	...	...	...	0·35	...	0·70	...	0·13	...	...	...	...	...	...
		Davangere	...	...	...	...	...	...	...	...	...	...	1·05		1·00	...	...	...	...	...	...	...	...
		Molakalmuru	...	...	...	...	...	...	...	...	...	...	...	...	0·73	...	...	...	...	...	...	...	...
		Jagalur	...	...	...	...	...	...	...	...	...	...	0·38	...	0·23	...	...	...	...	...	...	...	...
		Hosdurga	...	...	...	...	...	...	...	...	...	...	0·24	...	1·16	...	0·10	...	...	...	...	...	...
		Harihar	...	...	...	...	...	...	...	...	...	...	1·63	...	1·82	...	...	...	...	...	...	...	...

GOVT. OF H. H. THE MAHARAJA OF MYSORE,
GEN. AND REV. SECRETARIAT,
Bangalore, the 15th June 1906.

for the month of May 1906.

22	23	24	25	26	27	28	29	30	31	No. of rainy days in May		Total rainfall for the month of May		Heaviest rainfall for the month of May 1906	Total rainfall from 1st April to 31st May		Station	District	Meteorological Division
										1906	20 years' average	1906	20 years' average		1906	20 years' average			
0·17	...	...	...	..	..	.	...	0·30	..	5	6·8	1·40	4·98	0·56	1·46	6·03	Bangalore	Bangalore	Bangalore
..	.		...	...	...	...	...	...	..	4	4·5	0·65	3·51	0·20	0·72	4·02	Hoskote ...		
0·70	...	...	..	...	...	...	...	0·02	.	2	4·0	1·02	2·65	0·70	1·02	3·24	Dodballapur ...		
...	..	..	...	..	...	..	...	...	..	3	4·3	0·57	3·12	0·33	0·57	3·56	Nelamangala ...		
..	..	..		...	..	...	..	...	...	3	6·2	2·46	3·59	1·16	2·73	4·52	Kankanhalli ...		
...	.	..	...	...	...	.	..		...	1	6·5	0·19	4·30	0·15	0·19	5·42	Magadi ...		
0·36	...	..	.	..	..	...	..	...	..	6	5·8	3·79	3·59	0·99	4·61	4·33	Closepet .		
...	...	...	...	...	...	...	.	.	...	3	6·9	1·35	4·61	0·93	1·52	5·53	Anekal ...		
0·04	..	..	.	...	..	...	...	...		2	4·7	0·52	4·21	0·36	0·52	4·72	Devanhalli ...		
0·25	..	...	..	...	...	...	...	...	..	6	5·6	3·55	3·93	1·80	3·78	5·04	Channapatna ...		
											Average	**1·55**							
...	...	.	..	...	...	...	0·17	0·03	..	3	4·8	0·83	2·96	0·48	0·86	4·19	Kolar ..	Kolar	
0·11	...	.	.	...	..	..	...		.	4	3·9	1·61	2·49	1·27	1·97	3·36	Bowringpet ...		
...	...	...	...	...	...	.	...	0·04	...	...		0·04	2·74	0·04	0·04	3·45	Chintamani ...		
...	..	..	..	...	...	..	0·20	...	..	2	4·5	0·33	3·60	0·20	0·99	4·39	Mulbagal ...		
	...	...	..		...	...	...	.		.	3·2	...	3·06	..		3·48	Sidlaghatta ...		
2·05	...			...	...	...	...	...	...	2	5·0	2·63	3·46	2·05	2·92	4·13	Chikkballapur ...		
...	...		..	...	...	...	...	...	...	2	2·8	0·56	1·51	0·33	0·56	1·88	Bagepalli ...		
0·50	..	..	..	...	...	...	...	0·02	0·05	2	3·1	0·92	2·72	0·50	0·92	3·15	Goribidnur ...		
0·20	.	..	..	...	..	.	...	...	...	4	3·8	1·27	4·09	0·54	1·66	4·85	Malur ...		
...	..	...	...	..	...	...	.	...	...	1	3·5	0·19	2·85	0·15	0·98	3·42	Srinivaspur		
0·65	0·13	...	..	...	...	...	..	...	...	4	3·2	1·24	3·01	0·65	1·24	3·33	Gudibanda ...		
											Average	**0·87**							
...	...	...	..	...	...	...		..	.	2	6·2	0·62	4·12	0·40	0·66	5·11	Tumkur	Tumkur	
0·20	...	...	...	..	...	...	...	..	...	4	4·0	0·80	2·09	0·23	0·80	2·50	Maddagiri ..		
...	...	...	..	..	...	0·50	...	0·55	...	4	5·5	1·40	3·43	0·55	1·40	4·17	Chiknayakanhalli		
...	...	..	...	...	...		...	...		2	3·9	0·44	2·03	0·28	0·44	2·50	Sira .		
...	...	...	..	.		0·11	...	...	...	4	6·0	1·53	3·14	1·07	1·53	4·69	Gubbi ...		
...	...	...	..	...	..	.	...	...	0·10	2	5·8	0·57	3·49	0·33	0·57	5·35	Tiptur ...		
...		...	...	..	..	...	...	...	...	...	3·0		2·12	...	..	2·78	Pavagada ..		
0·30	0·09	...	...	...	...	...	...	...	0·32	6	4·8	3·35	3·50	1·80	3·35	4·46	Kunigal ...		
0·20	...	...	...		...	..	...	..	...	1	3·8	0·20	2·36	0·20	0·20	3·09	Koratagere ...		
..	...	...	...	...	...	...	...	...	...	3	6·1	1·75	2·88	0·85	1·97	4·12	Turuvekere ...		
											Average	**1·07**							
1·22	...	...	...	..	...	...	..	..	...	4	9·1	4·26	6·33	2·09	4·33	7·90	Mysore ..	Mysore	
...	...	..	.	...	...	...	...	...	..	5	8·1	2·18	4·93	1·16	2·23	6·06	Chamrajnagar ...		
1·11	...	..	.	..	...	...	...	..	...	6	8·7	3·17	5·59	1·11	3·52	6·99	Seringapatam ...		
0·16	...	...		..	...	...	...	...	...	5	9·2	2·97	6·27	1·92	3·37	8·17	Hunsur ...		
0·16	...	...	...	...	..	...	...	...	..	8	8·2	2·35	5·85	0·71	3·13	7·82	Yedatore ..		
0·74	...	...	.	.	...	...	...	...	...	5	7·3	3·64	3·91	1·38	3·64	5·44	Heggaddevankote		
	...	...		..	...	...		..	..	5	8·2	3·32	4·59	1·97	3·59	7·36	Gundlupet ...		
...	...	...	...	..	...	...	...	...	...	5	8·1	1·64	5·72	0·57	1·90	7·55	Nanjangud .		
0·81	...	...	...	..	...	...	..	.	...	4	7·8	2·68	6·21	1·11	2·68	8·33	T.-Narsipur ...		
...	.	..		...	...	.	...	...	...	6	7·4	2·38	4·17	1·01	2·66	5·32	Malvalli .		
0·52	...	...	...	...	..	...	..	...		3	7·4	2·45	4·86	1·38	2·64	6·17	Mandya ...		
...	..	...	..	..	...	...	.		..	6	9·2	2·15	6·14	0·75	3·20	8·32	Krishnarajpete ..		
..	..	..	...	...		...	...	...	...	5	7·5	4·44	4·64	1·72	4·44	5·36	Nagamangala ...		
											Average	**2·89**							
...	0·77	...	...	...	...	...	..	...	..	5	7·9	2·70	4·81	0·77	2·87	6·70	Hassan .	Hassan	
...	1·12	...	.	..	...	...	...	...		6	8·2	3·58	5·22	1·43	3·91	7·22	Manjarabad ..		
...	0·23	...	...	...	...	...	..	...	...	7	6·4	1·77	3.25	0·45	3·52	4·89	Arkalgud ..		
...	0·23	...	.	..	..	.	...	...	...	5	6·5	2·48	3·08	1·10	3·22	4·49	Belur ...		
...	2·25	...	...	...	..	..	...	...	.	5	9·4	4·24	3·44	2·25	5·24	4·68	Channarayapatna		
..	..		...	...	...	...	...	...	..	3	6·6	1·51	3·14	0·69	1·51	4·80	Arsikere ...		
...	0·50	...	...	..	..	...		...	...	7	7·1	4·22	3·72	1·34	4·96	5·71	Holé-Narsipur ..		
...	0·62	..	...	...	...		...	...	...	5	..	2·64	..	1·09	2·64	...	Alur ...		
											Average	**2·93**							
...	...	...	..	..	...	...	...	...	...	2	5·5	3·80	3·60	3·50	3·80	5·59	Shimoga	Shimoga	
...		...	...		..	...	..	...	.	2	4·9	1·67	2·99	1·02	1·67	4·48	Channagiri ..		
...	.	...	...	...	...	...	..	..	...	1	4·7	0·85	3·51	0·85	0·85	4·98	Honnali ...		
...	...	...	...	...	..	...	.	...	.	1	4·1	0·38	2·97	0·38	0·38	3·96	Shikarpur ...		
...	...	...	..	...	0·03	...	.	...	...	...	3·6	0·12	2·43	0·05	0·12	3·45	Sorab ...		
...	..	..	...	...	0·03	...	...	...	..	1	4·4	0·28	2·67	0·25	0·68	4·52	Sagar		
...	...	...	..	...	..	...	..	..	...	2	5·7	0·35	3·90	0·25	0·35	4·69	Nagar ...		
...	..	..	...		..			0·01		2	4·0	0·49	2·45	0·37	0·49	3·81	Tirthahalli ...		
..	..	.	.	..	..	...	..	.	..	1	4·8	1·25	3·44	1·25	1·25	5·93	Kumsi ..		
											Average	**1·02**							
..	..	..	..	.	...	...	...	..	.	2	7·8	1·47	4·87	1·14	1·72	6·64	Chikmagalur	Kadur	
...	..	...	...	...	...	..	...	...	...	1	4·9	1·45	3·31	1·45	1·14	4·35	Kadur .		
..	...	..	...	...	...		...	.	..	2	4·1	2·28	2·58	2·1[illegible]	2·28	3·30	Tarikere .		
0·09	..	...	...		.	...		.	...	2	5·8	2·48	3·76	1·46	2·48	5·37	Koppa ...		
...		...	...	...	...	...	...	...	...	2	8·1	2·48	5·23	2·25	3·03	7·54	Mudgere ...		
.	..	..	.	...	...	...	..	..		3	6·2	1·98	3·90	1·23	1·98	5·94	Yedahalli		
0·03	.	...	...	...	...	..	...	..	..	2	...	3·41	..	2·26	3·41	..	Sringeri ...		
											Average	**2·22**							
...		.	...	...		...	.	..	...	3	4·9	1·23	3·37	0·79	1·23	4·62	Chitaldrug	Chitaldrug	
..	..	...	.	...	...	..	..	...	...	...	4·8	0·04	3·70	0·04	0·04	4·45	Challakere ..		
..	...		.	..	..		...	.		3	4·7	1·58	3·72	1·37	1·66	3·49	Hiriyur ...		
	...	...	..	..	...	..	...	..	...	3	5·0	1·18	2·70	0·70	1·18	4·01	Holalkere ...		
...	...	..	..	...	.	..		.	.	2	4·9	2·05	2·41	1·05	2·05	3·13	Davangere ...		
..		...	..	...	...	..	.	..	..	1	3·0	0·73	2·10	0·73	0·93	2·60	Molakalmuru ...		
.	.	...		..	...	.	...	...	.	2	4·0	0·61	2·20	0·38	0·86	3·48	Jagalur ...		
...	...		...	...	...		.	.	...	3	4·6	1·50	3·32	1·16	1·71	4·54	Hosdurga ...		
...	.	...		...	..	..	...	..	..	2		3·45	...	1·82	3·45	.	Harihar .		
											Average	**1·34**							

Average for the State, **1·74**

By Order,

P. G. D'SOUZA,

for *Secy. to Govt., Gen. & Rev. Dept*

MYSORE.

BANGALORE CITY MUNICIPALITY.

بنگلور سٹی میونسپالٹی

832

اشتہار مؤخرہ ۳ نومبر ۱۹۰۵ع *

مرقوم الذیل دھرائے گئے رولس برائے انتظام اورنگرانی کرایہ دار گاڑیان کیلئے جو میونسپالٹی بنگلور سٹی کے حد مین ھین میونسپل کمشنرون نے تیار کئے ھین زیر حکم قلم ۳ ۱۸۸۷ع کے ھانکنی کیاریج رگیولیشن کے موافق جو گورنمنٹ نے منظور کی ھے اونکی پرسیڈنگس نمبر میونسپل (۷۵۹۳/۱۸۱-۰۵) ۴ مورخۂ ۳-۱-۱۹۰۶ع اطلاع کیلئے شایع کئے جاتے ھین جیساکہ ۱۸۷۱ع کے بنگلور میونسپل رگیولیشن سکشن ۲۲۷ سے ضرور ھی یہہ پھلی جولائی ۱۹۰۶ع سے عمل مین آوینگے *

(۱) ھرایک کرایہ دار گاڑی کے مالک کو ضرور ھی کہ اپنی گاڑی کیلئے میونسپالٹی سے لیسن یا (اجازت) لینا چاھئے *

(۲) لیسن میونسپل آفس سے تب ھی دیا جاویگا جب گاڑی اور گھوڑا یا گھوڑے پرسیڈنٹ یا وایس پرسیڈنٹ یا اور کوئی آفیسر جو اسکام کیلئے مقرر کیا گیا ھو امتحان اور منظور کرے اور وہ ٹھرائینگے کہ گاڑی کون سے درجہ کی ھے *

(۳) درجہ کے لیسن کرایہ دار گاڑیونکو ھونگے پھلے درجہ کے گاڑیان مین سب قسم کے ھین - جسمین جھٹکا اور گاڑیان جو بیلون اور ٹٹوون سے دوڑتے ھین - دوسرے درجہ کے جھٹکا یا دو چاک کے گاڑیان یا بنڈیان ٹٹوون سے دوڑتے ھین - تیسرے درجہ کے گاڑیان جو بیلون سے چلتے ھین اور لیسنان اونکے مالکون کو دئے جاوینگے یعنے قوانین کے جو اس رولس مین درج ھین اور ذیل کے شرایط پر - (۱) کہ گاڑی اچھی حالت مین ھو پر جز مرمت کیا ھوا ھو - (۲) کہ پھلے اور دوسرے درجہ کے گاڑیونکو دو لیامپس یا لاندر لگے ھون - اور تیسرے درجہ کے گاڑیون کو ایک لاندر ھو جسپر گاڑی کا لیسن کا نمبر لکھا ھو - (۳) کہ گھوڑا یا گھوڑے اس گاڑی کے درجہ مین جسکے لیسن دیا گیا ھے مقررہ اونچائی سے کم نہو جو پھلے درجہ کو ۱۴-۲ اونچا ھو اور دوسرے درجہ کو ۱۱-۳ ھانڈس ھو اور کوئی جانور تین سال کی عمر سے کم استعمال نہین کیا جا سکتا ھی *

(۴) کرایہ دار گاڑیان اور ھانکنے والون کیلئے لیسنان مطابق اس رولس کے جو ملحق ھین سو فارمون پر ھونگے اور موٹے کاغذ پر چھاپے ھونگے *

(۵) سالانہ لیسن فی ھرایک گاڑی کیلئے - پھلے درجہ کو ۹ روپیہ دوسرے درجہ کو ۴ روپیہ تیسرے درجہ کو ۲ روپیہ - اور ھرایک ھانکنے والے کو بلے کے لئے ایک روپیہ فی دینا ھوگا اور ھانکنے والے کا لیسن بغیر کسی اجرت کے دیا جاویگا یا بدلایا جاوے گا *

(۶) لیسن دار کو ضرور ھی کہ جب اسکو میونسپل آفس سے لیسن ملنے پر چاھئے کہ اپنے مکان پر ایک بورڈ جسمین اسکا نام اور لیسن نمبر پرنٹ کیا ھو لگاوے *

(۷) گھوڑے جو لیسن دار گاڑیون مین استعمال کئے جاوینگے وہ اچھے طور سے بنڈیون مین سدائے ھوے ھون اور اچھی حالت مین ھو - پبلک کام کے لئے لایق اور پھوڑون سے بھرے نہو - سوائے تیسرے درجہ کے گاڑیون کے تمام کی ھارنس اچھی اور پوری اور کارگذار ھو - ایک کولڈا جیساکہ کوچمیان استعمال کرتے ھین ھرایک ھانکنے والے کے ساتھ ھو - لکڑیان یا ڈالیان کا استعمال ممانعت کیا گیا ھی *

(۸) دو لاندر موم بتی سے سلگائے ھو پھلے درجہ کی گاڑیون کے ھمراہ ھو تیل بجائے موم بتی کے دوسرے اور تیسرے درجے کے گاڑیون کو بشرطیکہ روشنی اچھی ھو - لاندران بے عیب ھو اور وینڈ پروف ھو - تیسرے درجہ کے گاڑیونکا ایک چراغ سیدھے بازو باندھنا ھو مانند دوسرے ھانکنی کیاریج کے لاندرون کے *

(۹) گاڑیان همیشه ریپیر کئے هوے هو اور کماني درواز ے اور دریچے بے عیب هو - گاڑیون کو اتفاقًا وارنس لگانا هوگا جیساکه پرسیڈنٹ یا ویس پرسیڈنٹ یا اور کوئي آفیسر جو اُسکام کیلئے مقرر کیا هو اونکي نظر مین ضرورت هو *

(۱۰) پرسیڈنٹ یا ویس پرسیڈنٹ یا اور کوئي آفیسر جو اُس کام کیلئے مقرر هو اور یس-پي-سي یے- کے آفیسرون اور انسپکٹرون پولس کسیوقت پر صبح سے شام تک کوئي گھر مین چھان لیسندار گاڑیان جانوران هارنس اور دوسرے چیزان جو اسکام پر استعمال کئے جاتے هین اِس قانون کے برابر رکھے گئے هین سو اونکو ملاحظه کرنے کا حق حاصل هے اور مالك یا اوسکے ایجنٹ کو ضرور هے که ملاحظه کرنے کو سهل کرے *

(۱۱) اِس قانون کے مطابق لیسنان جاري رهینگے سرکاري سال بهر جسکے لئے وه دئے جاتے هین مگر وه وقت کے پیش از زیر حکم پرسیڈنٹ یا ویس پرسیڈنٹ میونسپل کمیشن کے منسوخ یا موقوف کر دینے کے لایق هونگے جب ثابت هوگا که مالك یا اُسکا ایجنٹ لیسن کے شرایط کے خلاف کرنیکا خطا وار هے *

(۱۲) جب کوئي لیسندار اکثر اپنا گھر بدلے تو لازم هے ایک نوٹس لکھي هوي معه دستخط کے پرسیڈنٹ یا ویس پرسیڈنٹ یا اور کوئي آفیسر جو اسکام کیلئے مقرر کیا گیا هے دیوے اگر ایك هفته گھر بدلنیکے پیش از بذریعه نوٹس اِطلاع نه دے تو وه لایق هوگا (۲۰ روپیه) بیس روپیه کے جرمانے کا *

(۱۳) هر ایك لیسن کو سلسله وار نمبر دیا جاویگا اور یه نمبر پهلے درجه کے گاڑیون پر موقعه کي جگه مین انگریزي مین رنگ سے لکھا هو اور انگریزي اور کنڑي یا هندوستاني مین دوسرے اور تیسرے درجه کے گاڑیون پر - پرسیڈنٹ یا ویس پرسیڈنٹ میونسپل کمیشن کے درخواست پر ایك عمده قسم کي هانکني کیاریج کو بغیر نمبر دینے کے چھوڑ سکتے هین نمبران دینیکا کام میونسپل آفس مین کیا جاویگا اور اوسکي اُجرت لیسن کي في مین شامل هوگي *

(۱۴) هانکنے والا یا مالك لیسندار گاڑي کا جو پبلك اسٹینڈ پر رهتے یا علانیه کرایه پر جاتا هو کوئي وقت پر دن اور رات مین اگر کوئي شخص طلب کرنے پر اِسي گاڑي کرایه پر دینا لازم هوگا ورنه کوئي معقول سبب انکاري کا هو تو ثابت کرنے کا بوجه هانکنے والے یا مالك پر هوگا *

(۱۵) میونسپالٹي وقتًا فوقتًا جگهون کو بطور اسٹینڈ کے کرایه دار گاڑیون کیلئے مقرر کریگي - هانکنے والے ایسے گاڑیون کے مقرره جگهون سے دوسرے جگهون مین کرایه کیلئے انتظاري کرے یا اپني گاڑیون کو چھوڑدے بغیر کسي نگران کے تو اونکي لیسنان جسے وے هانکتے هین ضبط کرنے کے ذمه دار هونگے - رجسٹریشن آرڈر جسمین که هانکني کیاریج اسٹینڈ پر درجه وار هونگے پولیس کے ماتحت هوگا - جو کچھ اسمین هے پیامسنجرون کیلئے دست انداز تصور نه کرے وے اپني خواهش سے گاڑیون مین جا سکتے هین - فهرست اسٹینڈونکي جو موجود هین اس قانون کے آخیر مین دئے گئے هین *

(۱۶) مرقوم الذیل ٹیس وقت اور فاصله کے لحاظ سے مقرر هونگے درجون کے کرایه دار گاڑیون کیلئے - کرایه وقت کیلئے *

	ایك گھنٹه کیلئے یا کم *		هرایك افزود گھنٹه یا حصه گھنٹه کا باره گھنٹے رات کے آگے *		هرایك افزود گھنٹه یا حصه گھنٹه کا باره گھنٹے رات کے بعد *		تشریح *
۱	۲		۳		۴		۵
	روپیه	آنه پائي	روپیه	آنه پائي	روپیه	آنه پائي	
پهلے درجه ایك گھوڑے کي گاڑي	۱	... ...	...	۴ ...	...	۶ ...	اگر چوڑي گھوڑونکي گاڑي هو تو کرایه ریٹ مین دونا دینا هوگا *
دوسرا درجه جھٹکا گاڑي ...	...	۶ ...	...	۳ ...	...	۴ ...	
تیسرا درجه بیل کي گاڑي ...	...	۴ ...	...	۲ ...	...	۳ ...	

834

نوٹ—یہ ریٹس یا کرائے موافق درجونکي ۱۲ گھنٹون کیلئے صبح کے ۵ سے رات کے ۱۲ گھنٹون تک
خیر انتہا روپیہ ۳—۳ روپیہ ۴ آنے اور ایک روپیہ ۴ آنے سے بڑھکر نہوگا اور انتہائي کرایہ ۴ روپیہ - ۲ روپیہ ۸ آنے
ور ایک روپیہ ۸ آنے ایک ایک جب تعداد گھنٹونکي ۱۲ گھنٹون سے بڑے - کرایہ فاصلہ کیلئے *

	پہلے درجہ کے *		دوسرے درجہ کے جھٹکا *		تیسرے درجہ کے بیل کے گاڑیان *		
	۲		۳		۴		۵
	روپیہ	آنہ	پائي	روپیہ	آنہ	پائي	روپیہ آنہ پائي
...ین میل اور اُسکے کم کیلئے ...	۱۲	...	...	...	...	...	... ...
...ہر ایک میل سے بڑھکر میل یا ایک میل کے بعد کوئي حصہ میل کا	۳	...	...	۲	...	...	۱ ۶
			ایک میل کیلئے یا کوئي حصہ میل کا *				

یہ مذکورۂ بالا کرائے وقت کیمطابق دینا ہوگا - مگر کرایہ مقرر کرنیسے پہلے کرایہ دینیوالا اپني خواهش ظاهر کرے کہ کرایہ مطابق فاصلہ کے دینے کیلئے - نوٹ—(۱) وهي کرایہ جو مقرر کیا گیا هے تمام اسٹیشنون مین واسطے پہلي اور دوسري اور تیسري درجہ کے گاڑیون پر جو سیول اور ملٹري اِسٹیشن سے سٹي داخل هونیکي لیا جاویگا اور ویساهي سٹي هئي سیول اور ملٹري اِسٹیشن مین - (۲) درباب دوسرے یا تیسرے درجہ کي گاڑي کے سنگل میٹ کیلئے سیول اور ملٹري اِسٹیشن سے سٹي کو مقرر هے - وهي کرایہ جو مقرر هے سیول اور ملٹري اِسٹیشن مین سنگل میٹ کیلئے سٹي مین بهي اختیار کرلئے *

(۱۷) کرایہ جو طلب کیا جاویگا واسطے کرایہ دار گاڑي کیلئے رول ۱۶ مین بتلایا گیا هے اُس سے بڑھکر نہوگا - نوٹ—اگر کوئي قول و قرار اِس رول کي مقررہ کرایہ سے بهي کم کیلئے کیا جاوے تو وہ هي لینا لازم هے *

(۱۸) کم از کم دوڑ پہلے اور دوسرے درجہ کے گاڑیون کو جو وقت پر کرایہ کیلئے سو ۶ اور ۵ میل في گھنٹہ دوڑین اور تیسرے درجہ کي گاڑي ۳ میل في گھنٹہ *

(۱۹) آخر درجہ تعداد لوگونکي جو هر قسم کي کرایہ دار گاڑیان لیجاوین حسب ذیل هو - چار چاک کي گاڑي مین آدمیان اندر اور هانکنے والا اور چھوکرا باهر - واگنٹ مین جو ایک گھوڑے کي ۶ لوگ موسائیس اور هانکنے والے کے - جھٹکا مین ۵ آدمي معہ هانکنے والے کے - دو بچے دس سال کے اندر بجائے ایک آدمي کي تصور کیا جاوینگے *

(۲۰) آخر هم وزن لگیج یا لگیج یا پیاسنجرون جو هرایک قسم گاڑي کي لیجانا هوگا حسب ذیل هے پہلے درجہ کي ایک گھوڑے کي گاڑي——آٹھ من یا ۶۴ پونڈ - دو گھوڑونکي——پندرہ من یا ۱۲۰ پونڈ - دوسرے درجہ کي جھٹکا——چھ من یا ۵۴ پونڈ - تیسرے درجہ کي بیل گاڑي——پانچ من یا ۴۰ پونڈ - جب پیاسنجرون یا لگیج بھرتي هو تو هرایک آدمي—ڈیڑھ من یا ۱۲ پونڈ وزن خیال کیا جاویگا اور هرایک بچہ دس سال کي عمر سے کم هو تو—پونا من یا ۶ پونڈ سمجھا جاویگا *

(۲۱) هرایک لیسندار هانکني کیارج مین ایک فہرست کرایہ اِس رولس کے مطابق چسپ کي هو - یہ فہرست انگریزي - کنڈي اور هندوستاني مین چھپي هوي هو - میونسپل پرسیڈنٹ یا ویس پرسیڈنٹ سالانہ لیسن دینیکے وقت ایک کاپي دینگے - مگر فہرست جو ضایع یا مٹگئي هو اُوسکے دهرانے کیلئے مالک کے ذمہ هے جو فوراً نئي بنائے - کاپیان قیمت دینے پر میونسپل آفس اور هٹ پولس اِسٹیشن سے مل سکتے هین *

835

(۲۲) هرایك هانکنے والا جسکو لیسن دیا گیا هے جبکه اِسٹیانڈ پر هو یا لیسندار گاڑي هانکتا هو یا کرایه پر لیجاتا هو ضرور هے که اپنے سیدهے هاته پر ایك پتل کا بلّے لگاوے جسمین اُسکا نام اور اُسکے لیسن کا نمبر هو اور تمام کرایه دار گاڑیون کے لیسنون جب طلب کئے جاوے کوئي پولس آفیسر یا میونسپل - یس-پي-سي -ے آفیسر سے ملاحظه کیلئے تو حاضر کرین *

(۲۳) کوئي شخص کو اِجازت نهین هے که کرایه دار گاڑي کو بطور هانکنے والے کے هانکئے جبتک که اوسکو هانکنے کا لیسن اِس غرض سے پرسیڈنٹ یا ویس پرسیڈنٹ میونسپل کمیشن نے دئے گیا هو *

(۲۴) هانکنے والے کا لیسن ایك سے دوسرے کو بدل نهین سکتا اور سرکاري سال کیلئے دیا جاویگا*

(۲۵) هانکنے کا لیسن کسي کو جو اٹهارہ سال کي عمر سے کم هو نهین دیا جاویگا اور جو کوئي که پرسیڈنٹ یا ویس پرسیڈنٹ یا کوئي آفیسر جو اسکے لئے مقرر منظور نه کرے *

(۲۶) لیسن دار هانکني کیاریجون مین جو کچھ اسباب پایا جاوے قریب کي پولس اِسٹیشن مین گاڑي کے مالك یا هانکنے والے نے رکھدیا جاوے ایك فهرست ایسے اسباب کي میونسپل آفس مین یا اور دوسرے جگهونپر لگادي جاویگي جیساکه پرسیڈنٹ یا ویس پرسیڈنٹ نے حکم کرے *

(۲۷) درخواستین لیسنونکے بدلانیکے لئے ایك ماه پیش از پورا هونے سال کے جسکیلئے لیسن دیا گیا هے کئے جاوے - اور نئے لئے گئے لیسنون اِسي بدستور اُوسي فیسر نے قانون کے مطابق رُول (۱) مین هے في دینے پر جیسا پهلے لیسن پر لیگئي تهي ویساهي اِطلاع کئے جائینگے *

(۲۸) جبکه هانکني کیاریج کوئي نئے مالك کو فروخت کردیجاوے غرضه سال مین جسکے لئے لیسن دیا گیا هے وه فوراً میونسپل آفس کو تبدیلي کي اِطلاع دیجاوے کیونکه ضروري تبدیلي بغیر اُجرت کے لیسن مین کیجاوے *

(۲۹) کوئي مالك یا ایجنٹ مالك کا یا هانکنے والا لیسندار گاڑي کا معلوم رهنے پر اجازت دیوے لیسن کے برخلاف کم تعداد گهوڑونسے کام لیوے یا معلوم رهنے پر زیاده تعداد پیاسنجرونکو اجازت یا افزود وزن گاڑي مین لیجاوے برخلاف رولس کے وه خطاوار جریمانے کا هوگا جو پچاس روپیه تگ هوگا اور اُسکا لیسن ضبط کر لیا جاویگا *

(۳۰) کوئي هانکنے والا ظالمانه مارتاهے اور بیطوري سے پیش آتا هے اور بڑهکر محنت لیتا هے یا دوسرے طور سے اپني لیسندار گاڑي کے گهوڑے کو اِستعمال کرتا هے وه خطاوار اُوسکا لیسن هانکنے کا ضبط کرلیا جاویگا - علاوه اور دوسري سزا جو قانون کے وقت کے برابر خطامند هو دیجاویگي *

(۳۱) لکهي هوي آرڈر سے پرسیڈنٹ ایك عرصه کیلئے جو ایك مهینے سے زیاده نهوگا موقوف یا رد کر سکتے هین کسي لیسن کو جو هانکني کیاریج کے مالك یا هانکنے والے کو دیا گیا هو - هانکني کیاریج کے رولس کے خلاف کرنیسے آلا لیسن موقوف یا ردکر دینے کا ذمه دار هے جبکه پرسیڈنٹ کو تشفي بخشے طور سے معلوم هو که مالك یا هانکنے والے کي بیطوري ثابت هے *

(۳۲) رولس کے توڑ دینے پر پرسکیوشن عدالت مین کوئي پیاسنجر پولس آفیسر یا اور کوئي آفیسر پرسیڈنٹ یا ویس پرسیڈنٹ سے اُسکام کیلئے مقرر کیا گیا هو داخل کرسکتا هے *

فهرست اِسٹیانڈونکي.....(۱) مشي ریلوے اِسٹیشن—(۲) خالي جگه قلعه کے رامتے پر اور روبرو بمبو بازار پیٹ کے (۳) خالي جگه یا هلکه دروازے کے پاس (۴) خالي جگه نگرت پیٹ کے پاس *

آے - یس - ناگوا کار
پرسیڈنٹ *

مالك کا لیسن نمبر*

هانکني کیاریج کا لیسن نمبر..... درجه..... بنگلور مشي هانکني کیاریج کے قوانین ۸۷ اع اور رولس ۱۹۰۵ع کے مطابق جو اختیارات مجهکو دئے گئے هین مین تمکو..... یه لیسن دیتا هون تمهارے گهر مین رکهنے کیلئے..... اِس تاریخ سے ۳۰ جون ۱۹۰۰ع تگ - پهلے که یه گاڑي کهینچے جاوے..... دوسرا یه گاڑي لیجاوے اسي تعداد پیاسنجر جو بڑهکر نهو..... جیساکه ضرور هے اور بغیر اُجرت کے ایك مناسب

836

مقدار لگیج لیجاوے - تیسرا - کہ یہ گاڑي کرایہ کیلئے دوڑے بنگلور سٹي مین - چاروان - کہ یہ گاڑي اِنسپکشن کیلئے کسي جگہ اور وقت پر جیساکہ حکم ہو لائي جاویگي - پانچوان . کہ کبھي ضایع ہو تو تمکو میري لکھي ہوي اِجازت سے جو پہلے حاصل کي ہو دوسري گاڑي ہنگامي طور سے اِستعمال کرین جسکے لئے یہ لیسن کا نمبر بدلا دیا جاویگا بغیر اُجرت کے . چھٹا - کہ تم رکھے ساتھ گھوڑے کو (٦) اور ہارنس جو اِستعمال کیا جاتا ہے - اچھي اور کام کي حالت مین - ساتوان - کہ کتنے ہي وقت تم تمہارا گھر یا جگہ جہان گاڑي رکھي جاتي ہے بدلین تو - ایک ہفتہ کے اندر تم مجھکو بذریعہ لکھي ہوي نوٹس کے اِطلاع دینا ہوگا جب کبھي بدلین اور ضروري تبدیل کیلئے یہہ لیسن پیش کیا ہو . آٹھوان - کہ تم اپني گاڑي مین ایک فہرست کرایہ کي انگریزي کنڈي اور ہندوستاني مین لگانا ہے اور بڑکر جو فہرست مین ہے سو کرایہ سے طلب نہ کرونگا - کوئي اِقراري منظوري رولس کے مقررہ کرایہ سے کم کیلئے تم پر لازم ہے - نوان - کہ یہ لیسن کوئي دوسرے شخص کے نام پر بدلایا نہین جاسکتا بغیر لکھي ہوي اجازت کے - دسوان - کہ یہ لیسن کوئي شرایط کے توڑ دینے پر یا ہانکني کیاریج رولس کے برخلاف یا بیطوري کیلئے موقوف یا رد کر دیا جاویگا - میرے دستخط اور مہر کے نیچے دیا گیا اِس روز.....یہ تاریخ.....پرسیڈنٹ میونسپل کمیشن بنگلور سٹي *

ہانکنے والے کا لیسن نمبر *

بنگلور سٹي ہانکني کیاریج کے قانون ۸۸۷ع اور رولس ۹۰۵ع کے مطابق جو اختیارات مجھکو دئے گئے ہین مین تم کو.....یہ لیسن دیتا ہون کہ تم تابع ہانکني کیاریج کے مالک کے ہانکنے والے کا کام کرایہ کیواسطے گاڑي ہانکنے.....ہر حصہ بنگلور سٹي مین اِس تاریخ سے ۳۰ جون ۹۰۰ع تک..... یہ شرایط پر جو زیل مین لکھے گئے ہین *

پہلا - کہ تم ہمیشہ جبکہ اُس کام پر ہو تم لگاوے موقعہ پر تمہارے جسم کے جیسا کہ پرسیڈنٹ حکم کرے ایک تگڑ کا بلّہ نمبر دیا ہوا مذکورۂ بالا مین - دوسرا - کہ تم سب وقت جبکہ اُسکا مہر ہو یہ لیسن نزدیک کرے اور جب کوئي پیامنجر پولس آفیسر جو ڈیوٹي پر ہو یا اور کوئي شخص ملازم ہانکني کیاریج ڈپارٹمنٹ کا طلب کرنے پر بتلایا جاوے - تیسرا - کہ جب تم کرایہ کیلئے مقرر کیا جاوے لیجانے مسٹر..... کو گاڑي مین کوئي جگہ پر میونسپل کے علاقہ بنگلور سٹي مین تو تم کو ضرور ہے کہ لیجاوے جیساکہ کرایہ دینے والے کے مرضي کے موافق لیجاوے - چاروان - کہ تم جب کرایہ پر مقرر کیا جاوے تو بغیر اِجازت کرایہ دینے والے کے گاڑي کو نہ لیجاوے یا غرض چھوڑ کر نہ چلا جاوے جبتک کہ کرایہ دینے والے کي اِجازت نہ لیوے - پانچوان - کہ تم گاڑي مین ایک فہرست کرایہ کي انگریزي - کنڈي اور ہندوستاني مین لگاوے اور فہرست مین داخل ہین سو کرایہ سے بڑکر کرایہ نہ طلب کرے اور کوئي اِقرار کم کرایہ کیلئے کیا جاوے جو فہرست مقرر ہے تو تم پر لازم ہے کہ وہ ہي منظور کرے - چھٹا - کہ یہ لیسن کوئي شرایط کے توڑ دینے پر یا ہانکني کیاریج رولس کے برخلاف کرنے پر یا کوئي بیطوري پر موقوف یا ردکر دیا جاوے گا - ساتوان - کہ یہ لیسن یا اوسکے ساتھہ کا بلّہ دوسرے کوئي شخص کو بدلایا نہین جا سکتا ہے بغیر درخواست مالک گاڑي کے اور مہر لکھي ہوي منظوري کے *

میرے دستخط اور مہر کے نیچے اس روز.....۹۰۰ع دیا گیا ہے -

پرسیڈنٹ میونسپل کمیشن بنگلور سٹي *

BANGALORE CITY MUNICIPALITY.

بنگلور سٹی میونسپالٹی

837

اشتہار مورخۂ ۲۱ مارچ ۱۹۰۶ع *

مرقوم الذیل قانون یا بی-لا برائے اختیارات قبرستانون اور مرگھٹون بنگلور مثي مین هین جو گورنمنٹ نے منظور کي هے پرسیڈنگس نمبر ۶-(۵-۱۷۷) ا - یم - ۹۶۷۳ مورخۂ ۱۹ مارچ ۱۹۰۶ع مین عام اطلاع کیلئے شایع کئے جاتے هین مطابق بنگلور میونسپل قانون ۱۸۷۱ع کے سکشن ۲۲۷ سے ضرور هے - اور یه عمل مین آوینگے پهلي جولائي ۱۹۰۶ع سے *

(۱) هر مالك یا شخص جو اختیار رکھتا هے کسي جگه کا جو استعمال کیجاتي هے بطور قبرستان یا مرگھٹ کے تو چاهئے کہ اسکو رجسٹر کرائے جس کیلئے ایك رجسٹر میونسپل آفس مین رکھا گیا هے معه مالك کے نام کے اور جو اشخاص کہ ایسے جگھون پر اختیار رکھتے هین اور میونسپل آفس مین بوقت رجسٹري ایك پلان یا نقشه اس جگه کا جسمین پیمایش اور چکبندي هو رکھین اور ایك في ۲ روپیه رجسٹري کیلئے دیوے *

(۲) اگر پرسیڈنٹ کو معلوم هوے کہ کوئي مالك یا کوئي شخص ایسے جگھونکي اختیارات نهین رکھتے هین تو پرسیڈنٹ نے اپني ماتحت کرلینگے اور اپنے حکم سے رجسٹر کردینگے یا بند کروادینگے *

(۳) اشتہار رجسٹر زبان انگریزي اور دیسي زبانون مین کوئي موقعه کے جگه پر قریب ایسے جگھونکے دروازے پر لگادئے جاوینگے *

(۴) جو کوئي ایسے جگھون کو رجسٹر کرے بعد واپسي سے یا بکري سے دستیاب کرے یا اور کوئي طور سے تو ایسے مالك هونے یا اختیار رکھتے هین ایك مهینه پیش دستیاب کرنے کے پرسیڈنٹ کو لکھي هوي اطلاع دیوے *

(۵) مالك یا شخص جو اختیار رکھتا هے اسي جگه کا جب پرسیڈنٹ نے طلب کرے تو جو کچھ چاهے پوري کیفیت درباب نوکرون کے یا طریقه کار روائي جو وهان کیجاتي هے یا اور کوئي کیفیت درباب اختیارات کے دیوے *

(۶) مالك یا کوئي شخص جو ایسے جگھون پر اختیار رکھتا هے چاهئے کہ سب وقت ایسے جگھون کو پاك حالت مین رکھے - خراب جھاڑون وغیره سے هري رکھے جیساکہ پرسیڈنٹ کو تشفي هو اور اگر ضرورت پر پرسیڈنٹ کي لکھي هوي نوٹس پر ایسے جگه کو کافي دیوار یا فنس سے حد بندي کرے *

(۷) جو شخص کہ ایسے جگھون پر اختیار رکھنا ضرور هے ۲۴ گھنٹون کے اندر اس آدمي کو اطلاع دیوے جو اس کام کیلئے پرسیڈنٹ سے مقرر کیا گیا هے اور ایسے فارمان پرسیڈنٹ سے مقرر کئے گئے هین تمام دفنائے اور جلائے گئے کي کیفیت جو وهان واقع هوتے هین دیوے *

(۸) کوئي شخص دفن نهین کر سکتا کوئي میت یا حصه میت کو قبر مین جو کھودي هوي هو یا گچ کي بنائي گئي هو یا اوسکي طور پر یا یه وضع سے کہ سناکافن یا صندوق کا اور صندوق نهو تو میت زمین کے سطح سے ۵ فیٹ سے نیچے کم نهو - اور کوئي قبر ایك میت سے زیاده دفن کیلئے استعمال نہ کیا جاوے بجز اس حالت مین کہ دو یا زیاده لوگ ایك هي گھر کے ایك هي وقت پر دفن کئے جاوے یا اس حالت مین جب مطابق قلم دس کے اجازت حاصل کرے - پرانے قبر کو کھودنے یا هڈواڑ مین دفن هونے *

(۹) کوئي شخص نهین باندھ یا کھود سکتا یا بندھایا یا کھودایا نهین سکتا کوئي قبر کو کسي قبرستان مین کم وز دو فیٹ کسي موجوده قبر کے بازو *

(۱۰) کوئي شخص بغیر لکھي ھوي پرسیڈنٹ کي اجازت کے موجودہ قبر کھول نہین سکتا *

(۱۱) جو کوئي قبرستان یا مرگھٹ مین میت کو یا حصۂ میت کو لاوے یا لیجاوے یا بھیجے چاھئے کہ اسکو دفن کرے یا جلادیوے بارہ گھنٹون کے اندر جبکہ وہ قبرستان یا مرگھٹ مین داخل ھونیکے بعد *

(۱۲) کوئي شخص جلاتا ھے یا میت کو جلانیوالا ھے یا حصۂ میت کو کسي مرگھٹ مین تو چاھئے کہ کسي حصۂ میت کو بغیر پورے طور راکھ بنے کے چھوڑ نہین سکتا *

(۱۳) کوئي شخص بطور ویشیوان یا قبر کھودنے والا بند نہین سکتا کسي میونسپل کے قبرستان یا مرگھٹ کا بغیر حاصل کرنے لیسن کے پرسیڈنٹ سے اسکام کےلئے لیسنان دئے جاوینگے مطابق لگے ھوے فارم کے اور جو پرسیڈنٹ کي مرضي کیموافق واپس لیجاویگا یا رد کردیا جاویگا *

لیسن کا فارم جو قبر کھودنے والونکو دیا جاویگا۔

مطابق قانون بي۔لا بغرض اختیارات قبرستانون مرگھٹونکے.....سے لیسن دیا جاتا ھے واسطے کام کرنے بطور.....جگہ پر.....قبرستان اور مرگھٹ مین جو.....راستے پر ھے.....ڈیوژن پیچھے بتلائے ھوے شرایط کے بموجب *

پرسیڈنٹ *

شرایط جو بتلائے گئے۔

یہ لیسن واپس یا رد کر لیا جاویگا جب ثابت ھو کہ لیسندار نے (۱) بغیر معقول سبب کے غیر حاضر ھو کوئي وقت یا اوقات پر جبکہ اسکي ضرورت بطور..... .....ضرور ھے کسي شخص یا اشخاص جماعت سے جو وھان گئے ھون (۲) یا غفلت کرے کام سے جو اُسے ضرور ھے وھان پر دفن یا جلانیکے وقت پر (۳) کرے یا اجازت دیوے یا فریق مین شامل ھو۔ اختیارات قبرستان یا مرگھٹ کے قانون بي۔لا کے توڑ دینے مین جھانتک اسکے مطابق ھو اور اسکے کامونمین تو (۴) مرقوم الذیل اجرت سے بڑکر طلب کرے یا کوشش کرے بڑکر لینے کیلئے *

بارہ برس کي عمر سے کم میت کو دفن کرنے ۸ آنہ بارہ برس کي عمر سے بڑکر دفن کرنے ...۱۲ آنہ *

جلانیکے لئے میت کو جو بارہ برس سے کم ھو معہ دودہ کا رسم اگر ھو تو ... ...۳ آنہ *

جلانیکے لئے میت کو جو بارہ برس سے کم ھو جو س عمر سے بڑکر ھو معہ مذکور بالا ...۶ آنہ *

(۵) قبر کھودنے کیلئے ھتیارونکي سربراھي وغیرہ جب اوسکي ضرورت طلب نہ کیجاوے دیڑہ آنہ پرسیڈنٹ کي رائے مین کسي بے طوري کا خطامند ھو تو لیسن واپس لیجانیکي ضرورت ھوگي *

(۱۴) کوئي شخص نہین تعمیر باند سکتا یا تعمیر کرایا بندا سکتا ھے کسي عمارت قبر کا پتھر قبر دیول یا بھاڑ کسي میونسپل قبرستان یا مرگھٹونمین بغیر پرسیڈنٹ کي لکھي ھوي اجازت حاصل کرنیکے پرسیڈنٹ کي اجازت حاصل کرنیکے پیش از ایک في ۸ آنہ في اسکورفیٹ یا حصہ اسکورفیٹ درخواستدار دینا چاھئے۔ پرسیڈنٹ کے بغیر اجازت کسي تعمیرات یا بندن کیجاوے تو توڑدیجاویگي *

(۱۵) یہ قانون کے خلاف کار روائي خطامند کو تقصیر کے ثابت پر جرمانہ کے لایق کریگي جو بیس روپیون سے بڑکر نہوگا *

ایچ۔ یس۔ ناگواکار۔

پرسیڈنٹ *

839

Rec 29/6

The Mysore Gazette

Vol. 41.] PUBLISHED BY AUTHORITY. [No. 26.

BANGALORE, THURSDAY, JUNE 28, 1906.

☞ Separate paging is given to the Parts in order that they may be filed as distinct compilations.

CONTENTS.

PART I.—Notifications by the Government of His Highness the Maharaja of Mysore.

PART II.—Notifications by the Government of India; The Hon'ble the Resident in Mysore; Chief Judge; Survey and Inam Superintendent; Comptroller; Chief Engineer; Mysore State Railway; Amrut Mahal Department; Inspector-General of Registration; Senior Surgeon; District and Sessions Judges; Sub-Judges; Deputy Commissioners of Districts; Forest Officers; Presidents, Bangalore and Mysore City Municipalities; Season Reports; Mortuary and Meteorological Statements; Postal Notices; Civil and Military Station Notifications, &c.

PART III.—Legislative Measures and Rules thereunder.

PART IV.—Official Papers.

PART I.

Notifications by the Government of His Highness the Maharaja of Mysore.

GENERAL AND REVENUE.

No. 13174—*San. F.* 121 *of* 1906, *Sl.* 4, *dated* 27*th June* 1906.

Whereas the Government of His Highness the Maharaja of Mysore are satisfied that there is danger of an outbreak of plague in Tirupathi in the Arsikere Taluk, Hassan District, if persons from plague-infected areas are permitted to assemble at that place on the occasion of Sri Venkataramanaswami car festival.

The Government of His Highness the Maharaja of Mysore, in exercise of the powers vested in them by the Epidemic Diseases Regulation, II of 1897, prohibit the attendance of persons thereat from plague-infected areas from the 26th June to the 8th July 1906, inclusive.

All persons proceeding to the said festival in contravention of this notification will be turned back.

No. 13177—*San.* (233-05)-2, *dated* 27*th June* 1906.

Whereas the Government of His Highness the Maharaja of Mysore are satisfied that there is cholera in Malekal Tirupathi near Arsikere in the Hassan District and whereas it is desirable to prevent its spread :—

The Government of His Highness the Maharaja of Mysore, in exercise of the powers vested in them by the Epidemic Diseases Regulation, II of 1897, hereby prohibit people from other localities from attending Sri Venkataramanaswami's car festival at Malekal Tirupathi, from the 28th June to the 8th July 1906.

All persons proceeding to the said festival in contravention of this notification will be turned back.

No. 13021—*L. B.* (484-05)-2, *dated* 23*rd*—26*th June* 1906.

The election by the Taluk Board of Bagepalli of Mr. Pathapalya Sinappa as a member of the Kolar District Board, in place of Mr. P. Venkatappa, deceased, is approved.

No. 13182 *B.*—*Edn.* (337-05)-3, *dated* 27*th June* 1906.

The Government of His Highness the Maharaja of Mysore are pleased to direct that all pupils of the marginally noted depressed castes studying in any Taluk Vernacular School, Taluk Branch School, or Village School in the State, be exempted from the payment of school fees.

Holeyas.	Korachars.
Madigas.	Koramas.
Lambanis.	Naindas.

No. 12992—*Ml.* (146-05)-11, *dated* 21*st June* 1906.

Under Section 6 of the Mysore Land Acquisition Regulation, VII of 1894, it is hereby declared that the undermentioned houses and lands in the town of Chitaldrug are required for a public purpose, *viz.*, for opening out roads, etc., in the Chitaldrug Municipality.

No.	Owner's name	Description	Locality	Extent			Boundaries			
				East to west	North to south	Total	East	West	North	South
	I. Dilapidated houses to be demolished.									
1	Kariamma	Tiled house ..	Iyennapeta ...	6	28	168	Krishna Row's house...	Public road ...	Venkobachar's house...	Iyennapeta road.
2	Mochi Linga	Open land ...	Mochi street ...	10	5	50	Burjanhatti road ...	Malaka's house ...	Open land ...	Road
3	,, Malaka	Do ..	Do ...	10	5	50	Do ...	Linga's house ...	Erappa's land ...	Do
4	,, Erappa	Do ...	Do ...	10	5	50	Malaka's house ...	Open land ...	Do ...	Do
5	Channa Mallappa	Tiled house ...	Doddapeta ...	22	5	110	Gurusiddappa's back yard.	Sante Bagal road ..	Tailor Tukkappa's house.	Patwiga Narrsappa's house.
	II. Extending road from behind Pyate Anjaneya temple.									
1	Vakil Narasingappa	Back yard ...	Iyennapeta ..	10	4	40	Swamirayachar's back yard	Road ..	Ramachar's house ...	Owner's back yard.
2	Tadpatri Swamirayachar ...	Do ...	Do ...	10	4	40	Public road ...	Narasingappa's back yard.	Open yard of Ramachar	Do
	III. Widening road from Mazid well to Maniyar Mohalla.									
1	Bale Nabi Sabi	Open yard ...	Mahomedan Mohalla	2	8	16	Public road ...	Owner's house ...	Hanumakka's house ...	High road.
	IV. Opening out congested parts around old Anche house.									
1	Ummabai	Tiled house ...	Doddapeta ...	5	6	30	Owner's house ...	Open land ...	Public road ...	Lane
2	Santappa	Open yard ...	Do ...	11	9	99	Old Anche house ...	Owner's house ...	Kadappa's yard ..	Open yard.
3	Kadappa	Do ...	Do ...	10	9	90	Open yard ...	Open land ...	Owner's house ...	Santappa's open yard.
	V. Opening out a road from Saranthanahatti to Burjanhatti gardi.									
1	Narayani Thimma	Open land ...	Burjanhatti ...	20	6	120	Government land ...	Dastagiri's back yard...	Owner's house ...	Owner's house.
2	Dastagiri Sab	Do ...	Do ...	12	5	60	Thimma's open yard ..	Public road ...	Do ...	Do back yard.

No. R. 16075—*L. R.* (685-05)-3, *dated* 20*th June* 1906.

Under Section 6 of the Land Acquisition Regulation, No. VII of 1894, it is hereby declared that the lands described hereunder are required for a public purpose, *viz.*, for opening roads, etc.; and under Sections 7 and 3 (*c*) of the said Regulation, the Assistant Commissioner in charge of the Malur group of taluks is authorized to take order for the acquisition of the said lands:—

District	Taluk	Hobli	Village	Name of khatedar	Survey No.	Dry wet or garden	Total extent	Assessment	Extent required	Boundaries			
										East	West	North	South
							A. g.	Rs. a. p.	A. g.				
Kolar	Bowringpet	Dasarahosahalli	Ooregum ...	Ganga and Nalladasari Munia	200	Dry	4 38	8 8 0	0 33	S. No. 99 ...	S. No. 196 ...	S. No. 201 ...	S. No. 196.
				Venkatiga	201	Do	3 2	5 0 0	0 18	S. Nos. 204 and 205 ...	Gold Mining Company lands.	S. No. 202 ...	S. No. 200.
			Jodi Gollahalli	Vedavyasachar	...	Do	...	... ..	2 16	Masikam village ...	Jodi Gonimakanhalli.	Gangadoddi village. ...	Gangadoddi village.
			Jodi Gonimakanhalli	Do	...	Do Wet	...	... ...	3 24 0 34 8 5	Jodi Gollahalli ...	Surapalli village ...	Gonimakanhalli village.	Gonimakanhalli village.

No. R. 16078—*L. R.* 698-05-3, *dated* 20*th June* 1906.

Under Section 6 of the Land Acquisition Regulation, No. VII of 1894, it is hereby declared that the lands described hereunder are required for a public purpose, *viz.*, for village extension, and under Sections 7 and 3 (*c*) of the said Regulation, the Assistant Commissioner in charge of the Bowringpet group of taluks is authorized to take order for the acquisition of the said lands:—

District	Taluk	Hobli	Village	Name of khatedar	Survey No.	Total extent	Assessment	Extent required	Boundaries			
									East	West	North	South
						A. g.	Rs. a. p.	A. g				
Kolar	Bowringpet	Dasarahosahalli	Masikam	G. Ramiah	33	0 11	0 8 0	0 5	Village site ...	S. No. 32	S. No. 32	Lane
				Pillachary	34	0 2	0 4 0	0 2	Lane	Village site ...	Village site ...	Do

No. R. 15556—*L. R.* 528-05-4, *dated 6th June* 1906.

Under Section 6 of the Land Acquisition Regulation, No. VII of 1894, it is hereby declared that the lands described hereunder are required for a public purpose, *viz.*, for excavating a feeder channel to the Oomathur tank and for throwing bank to protect the Dasanur village tank ; and under Sections 7 and 3 (*c*) of the said Regulation, the Assistant Commissioner in charge of the Nanjangud group of taluks is authorized to take order for the acquisition of the said lands :—

District	Taluk	Hobli	Village	Name of khatedar	Survey No.	Total extent	Kharab	Remaining extent	Assessment	Extent now required		Boundaries			
										Extent	Assessment	East	West	North	South
						A. g.	A. g.	A. g.	Rs. a. p.	A. g.	Rs. a. p.				
Mysore	Nanjangud	Doddakowlande	Dasanur	Mallegowda and others ...	257	5 11	0 11	5 0	6 8 0	1 3	1 4 6	No. 251 and voni ...	No. 251 ...	No. 311 and halla ...	Voni.
				Puttegowda and others ...	303	3 6	0 2	3 4	3 8 0	0 37	1 1 6	No. 303 ...	No. 303 ..	No. 304 ...	No. 299.
				Do	304	4 6	...	4 6	5 0 0	0 31	0 14 8	No. 304 ...	No. 304 ...	No. 305 ...	No. 303.
				Chikadesaraje Urs	290	20 2	6 12	13 30	27 0 0	1 14	1 14 0	No. 290 ...	No. 290 ...	No. 297 ...	Oomathur gadi.
				Hutchasetti	297	2 27	...	2 27	3 12 0	0 19	0 8 0	No. 297 ...	No. 297 ...	No. 298 ..	No. 290
				Krishnasetti	298	2 2	...	2 2	2 0	0 20	0 8 6	No. 298 ...	No. 298 ...	No. 299 ...	No. 297.
				Mallegowda and others ...	299	3 24	...	3 24	4 8 0	0 19	0 9 0	No. 299 ...	No. 299 ..	No. 302 ...	No. 298.
				Subbegowda	248	1 36	...	1 36	2 12 0	0 8	0 2 11	Halla ...	No. 248 ..	Halla ...	No. 249.
				Mallegowda and others ...	249	6 11	...	6 11	8 0 0	0 3	0 1 6	Do ...	No. 249 ...	Halla ...	No. 252.
				Do	252	3 30	...	3 30	4 8 0	0 4	0 1 11	No. 252 ...	No. 252 ..	No. 252 and halla ...	No. 252.
				Subbegowda and others ...	256	3 0	...	3 0	4 8 0	0 13	0 7 8	No. 257 ...	No. 256 ...	Nos. 312 and 313 and halla	No. 256.
				Do	311	5 15	0 2	5 13	7 8 0	0 3	0 1 7	No. 311 ..	No. 311 ...	No. 311	Halla.
				Mallegowda and others ...	313	4 11	0 11	4 0	4 8 0	0 17	0 8 0	No. 256 ...	No. 313 ...	No. 313 ...	No. 313.
				Total ...		65 22	0 39	64 23	83 4 6	6 31	8 3 9				

842

Notification No. Fl. 8456—*S. & A.* 620-05-3, *dated Mysore, 7th June* 1906.

The following Order of the Government of His Highness the Maharaja is published for general information :—

Proceedings of the Government of His Highness the Maharaja of Mysore.

READ—

Letter No 5434, dated the 30th March 1906, from the Comptroller to the Government of His Highness the Maharaja of Mysore, stating that the rule permitting the grant of privilege leave preparatory to retirement is in force in Mysore only, that in British India privilege leave is not given preparatory to retirement because it is allowed to an officer to give him some respite from work, and an officer who is allowed to retire from service and is relieved of work for the rest of his life does not stand in need of any such respite and cannot claim leave on full pay under the Regulations, and suggesting that the existing rule permitting the grant of privilege leave preparatory to retirement may be withdrawn.

Government Order No. 15097-136—P. & A. 1396, dated the 20th April 1903, directing that such privilege leave as an officer may be entitled to at the time of his retirement be granted to him preparatory to his retirement from the service.

No. FL. 8190-235—S. & A. 620-05-2, DATED THE 26TH MAY 1906.

ORDER THEREON.—The Government agree with the Comptroller that the grant of privilege leave preparatory to retirement as a matter of course in all cases is objectionable in principle and inconsistent with the spirit of the Mysore Service Regulations. Privilege leave is given to enable an officer to have some respite from work and to recoup his health and strength so that he may on return from leave perform his duties efficiently, and is evidently uncalled for in the case of an officer who retires.

2. Order No. 15097-136—P. & A. 1396, dated the 20th April 1903, which created the innovation, is accordingly cancelled and the Comptroller is requested to issue a correction to the Mysore Service Regulations cancelling the rule in question.

3. As, however, the sudden withdrawal of an existing concession without previous notice is likely to cause hardship, this order will not be applied to those who retire this year from the 1st July 1906.

(Signed) B. K. VENKATA VARADA IYENGAR,
Secretary.

No. R. 15658—*L. R.* 703-05-3, *dated 9th June* 1906.

Under Section 6 of the Land Acquisition Regulation, No. VII of 1894, it is hereby declared that the land described hereunder is required for a public purpose, *viz.*, for the extension of the village site of Ganiga village, Mandya Taluk; and under Sections 7 and 3 (*c*) of the said Regulation, the Assistant Commissioner in charge of the French Rocks group of taluks is authorized to take order for the acquisition of the said land :—

District—Mysore.
Taluk—Mandya.
Hobli—Basaralu.
Village—Ganiga.
Name of khatedar—Kempa, Kada—Joint khatedars.
Survey No.—$\frac{1}{1}$.
Dry, wet or garden—Dry.
Total extent—6 acres and 17 guntas.
Assessment—Rs. 4-0-0.
Extent now required—2 acres.
Boundaries—
East—Part of Survey No. 1 and Survey No. 49.
West—Part of Survey No. 1.
North—Portion of Survey No. 1.
South—Lane and Gramathana.

No. R. 15863—*L. R.* 704-05-3, *dated* 14*th June* 1906.

Under Section 6 of the Land Acquisition Regulation, No. VII of 1894, it is hereby declared that the lands described hereunder are required for a public purpose, *viz.*, for extending the village of Harihara in the Malvalli Taluk of the Mysore District; and under Sections 7 and 3 (*c*) of the said Regulation, the Assistant Commissioner in charge of the French Rocks group of taluks is authorized to take order for the acquisition of the said lands :—

District—Mysore.
Taluk—Malvalli.
Hobli—Halgur.
Village—Harihara.
Names of khatedars—1. Puttasamaiya, 2. Honnappa, 3. Ramaiya.
Survey No.—241.
Dry, wet or garden—Dry.
Total extent—7 acres and 14 guntas.
Assessment—Rs. 4.
Extent now required—
Extent—1 acre.
Assessment—Annas 9.
Boundaries—
East—Survey No. 1, Marigowda *bin* Marigowda
West—Survey No. 231, Puttasamaiya, Ramaiya and Honnappa
North—Survey No. 241, Puttasamaiya, Ramaiya and Honnappa.
South—Village site.

No. R. 15921—*L. R.* 715-05-3, *dated* 16*th June* 1906.

Under Section 6 of the Land Acquisition Regulation, No. VII of 1894, it is hereby declared that the land described hereunder is required for a public purpose, *viz.*, for extending the village site of Hebbalguppe village, Heggaddevankote Taluk; and under Sections 7 and 3 (*c*) of the said Regulation, the Assistant Commissioner in charge of the Hunsur group of taluks is authorized to take order for the acquisition of the said land :—

District—Mysore.
Taluk—Heggaddevankote.
Hobli— Do
Village—Hebbalguppe.
Name of khatedar—Chikka.
Survey No.—67.
Total extent—3 acres and 35 guntas.
Assessment—Rs. 4.

Extent now required—
Extent—3 acres and 35 guntas.
Boundaries—
East—Hebbalguppe village.
West—Survey No. 68.
North— Do No. 69.
South— Do No. 66.

No. R. 16262—*L. R.* 670-05-6, *dated* 25*th June* 1906.

Under Section 6 of the Land Acquisition Regulation, No. VII of 1894, it is hereby declared that the land described hereunder is required for a public purpose, *viz.*, for stabling the car of Sri Chamundeswari on the Hill; and under Sections 7 and 3 (*c*) of the said Regulation, the Assistant Commissioner in charge of the Mysore Taluk is authorized to take order for the acquisition of the said land :—

District	Taluk	Village	Name of khatedar	House, ankanams	East to west in feet	North to south in feet	In square feet	House or vacant site	Boundaries			
									East	West	North	South
Mysore	Mysore	Chamundi Hill	Gumbarati Chama ...	...	30	10	300	Vacant site.	Kadaba Ramanna's house.	Road ...	Eswara temple.	Kempamma Marideva's house.
			Kempamma ...	4½	18	20	360	House site.	Maradeva's house.	Do ...	Road and vacant site	Vacant site and road.
			Maridevamma ...	3	12	20	240	Do ...	Kadaba Ramanna's house.	Kempanna's house.	Vacant site ...	Road.

No. R. 16270—*L. R.* 719-05-3, *dated* 25*th June* 1906.

Under Section 6 of the Land Acquisition Regulation, No. VII of 1894, it is hereby declared that the lands described hereunder are required for a public purpose, *viz.*, for a new village site in the village of Dhanagahalli, Chatnahalli hobli, Mysore Taluk; and under Sections 7 and 3 (*c*) of the said Regulation, the Assistant Commissioner in charge of the Mysore Taluk is authorized to take order for the acquisition of the said land :—

District	Taluk	Hobli	Village	Name of khatedar	Survey No.	Dry, wet or garden	Total extent	Remaining extent	Assessment	Extent now required		Boundaries			
										Extent	Assessment	East	West	North	South
							A. g.	A. g.	Rs.	A. g.	Rs.				
Mysore	Mysore	Chatnahalli	Doddahundi, a hamlet to Dhanagahalli village	Malla *alias* Anniah.	105/3	Dry ...	1 16	1 16	1	1 16	1	Survey Nos. 85 and 86	Survey No. 107	Survey No. 104	Village site of Doddahundi
				Basava ...	105/4	Do ...	1 2	1 2	1	1 2	1				

No. R. 16376—*L. R.* 678-05-6, *dated* 27*th June* 1906.

After serial No. 48, Sonnenahalli in the list of villages, constituting the newly formed Hessarghatta Hobli in the Bangalore Taluk, given under Notification No. R. 15364-L—R. 678-05-3, dated the 30th May 1906, published at page 237 of Part I of the *Mysore Gazette* of the 7th June 1906, add "Challahalli" giving to it the serial No. "49" and to Haniyur No. "50." The villages transferred from Devanhalli Taluk will begin with serial No. 51, thus making the total number 57.

No. G. 6241—G. M. 129-05-8, dated 21st June 1906.

All Offices, Schools, Courts and other public institutions in the State will be closed on Friday the 29th June 1906, in celebration of the Birthday of His Majesty the King-Emperor of India, instead of on the 26th instant.

CIVIL APPOINTMENTS.

Heads of Departments and all other officers concerned are informed that Notifications in the Gazette are in future to be accepted as disposing of all references regarding leave, transfers, appointments, powers and other personal questions affecting Gazetted officers, as to which orders are gazetted by the Government in this Part of the Gazette, and that any subsidiary orders as to relief of their subordinates and the like, which such notifications necessitate, must be issued by them on receipt of the Gazette, as no other orders will be issued by Government.

No. R. 16173—L. R. 363-05-7, dated 22nd June 1906.

Mr. N. Gopalakrishna Iyengar, Amildar of the Seringapatam Taluk, who was granted one month's privilege leave in Notification No. R. 12807—L. R. 363-05-4, dated the 4th April 1906, having availed himself of the above leave from the forenoon of the 3rd May 1906, and returned to duty on the forenoon of the 18th idem, the unexpired portion of the leave is hereby cancelled.

No. R. 16263—L. R. 657-05-4, dated 25th June 1906.

Mr. B. J. Kumaraswami Naik, Assistant Commissioner, Chitaldrug District, who was granted fifteen days' privilege leave in Notification No. R. 14126, dated the 2nd May 1906, having availed himself of the same in the forenoon of the 25th May 1906, and returned to duty in the forenoon of the 8th June 1906, the unexpired portion is hereby cancelled.

No. R. 16298—L. R. 239-05-6, dated 25th June 1906.

Under Article 188 of the Mysore Service Regulations, Mr. C. Seshadri Iyengar, Extra Assistant Commissioner, is granted privilege leave for three months, with effect from the 1st July 1906, preparatory to his retirement.

No. R. 16370—Ft. 208-05-5, dated 26th June 1906.

Under Article 188 of the Mysore Service Regulations, Mr. A. Ananda Rao, Forest Settlement Officer in Mysore, is granted privilege leave of absence for two months, with effect from the date from which he avails himself of the same.

No. Fl. 8774—Gl. Fin. 352-05-2, dated 25th June 1906.

Mr. L. Bishtopanth Badami handed over, and Mr. K. Krishna Iyer received, charge of the State Huzur Treasury in the forenoon of the 15th June 1906.

"The Petition Box kept at the General and Revenue Secretariat, Bangalore, will be cleared at 12 noon every day by the Secretary to Government, and in his absence from Bangalore, by one of the Under-Secretaries."

By Order,

K. S. CHANDRASEKHARA AIYAR,
Secy. to Govt., Gen. & Rev. Dept.

GEOLOGICAL.

No. 2759, dated 13th June 1906.

The Government of His Highness the Maharaja of Mysore are pleased to direct that the following alterations and additions be made in the General Rules for the grant of Prospecting Licenses and Mining Leases in Mysore, issued under Government Notification (Geological) No. 555-S., dated 2nd March 1904, in the case of applications for licenses and leases for Manganese and Chromium :—

(1) *Rule* 15.—After the words "in any direction" add the words "or two square miles in the case of Manganese and Chromium."

Rule 19.— Ditto

Rule 20.—For "thirty" read "ten."

Rule 21.— Omit.

Rule 22.—(*a*) For "Rs. 1,000" read "Rs. 500."

FORM No. 2.

After the words "Prospecting License" in the heading and in the first para add the words "for Manganese or Chromium."

After "March 1904" add the words "as modified by Notification No. 2759, dated 13th June 1906."

FORM No. 3.

Heading of Form.—Add the words "for Manganese," or "for Chromium" (as the case may be) after "Prospecting License."

Preamble.—For the word "minerals" substitute the word "Manganese" or "Chromium" (as the case may be). After "March 1904" add "as modified by Notification No. 2759, dated 13th June 1906."

Clause 1.—For the words "minerals, stones and rocks" substitute the word "Manganese" or "Chromium" (as the case may be).

Clause 6.—For the words "all minerals, stones and rocks" in the second line substitute the word "Manganese" or "Chromium" (as the case may be).

In the same clause, after the word "royalty," substitute "at six annas per ton of ore removed" for the words "at the following rates on the gross value of the gold.....finished products, five per cent."

Clause 7.—For the words "minerals, stones and rocks" read the words "the Manganese" or "the Chromium" (as the case may be).

Clause 15.—After the words "mining purposes" and before "a block of land" add the words "within the area to which this license applies," and for the words "one square mile in area and not more than one mile from end to end..... ..... applies" substitute "two sqare miles, which shall be as far as possible in the shape of a rectangle of which the length must not under ordinary circumstances exceed twice the breadth."

And after the words "2nd March 1904," add "as modified by Notification No. 2759, dated 13th June 1906."

FORM No. 4.

After the words "Mining Lease" in the heading and in the 1st para, add the words "for Manganese or Chromium."

After "March 1904" add "as modified by Notification No. 2759, dated 13th June 1906."

3rd para.—For "Rs. 1,000" read "Rs. 500."

4th para.—Omit.

FORM No. 5.

Heading of the Form.—Add the words "for Manganese" or "for Chromium" (as the case may be) after "Mining Lease."

Clause 2.—Substitute "Rs. 500" for "Rs. 1,000."

Clause 3.—Substitute the word "Manganese" or "Chromium" (as the case may be) for the words "all.....rocks" and omit the word "collectively" and read "mineral" for "minerals."

In the same clause omit the words "gold, metals, precious stones or other."

Clause 4.—Read "Mineral" for "Minerals."

Clause 5.—Substitute "ten" for "thirty" before "years" in the second line.

Clause 8.—After the word "royalty" substitute the words "provisionally fixed at the rate of six annas per ton of ore removed" for the words "at the rates hereinafter .....all other finished products, five per cent."

Clause 11.—Read the words "the mineral" for the words "all minerals."

Clause 13.—Omit this clause altogether.

Clause 14.—Read the words "the minerals" for the words "all minerals."

Clause 15.—Read the words "the minerals" for the words "all minerals."

Clause 16.—Read "Royalty" for "Royalties" and omit the words "provided....."

Clause 18.—Read "mineral" for "minerals."

Clause 22.—Read "mineral" for "such minerals."

Clause 44.—For "the raising of minerals" read "the raising of the mineral,"
Substitute the word "therefrom" for the words "from such minerals."

Clause 46.—Read "the mineral" for "minerals."

Clause 47.—Omit the words "or shall fail to provide.....block" and substitute "ten" for "thirty" and "Rs. 500" for "Rs. 1,000."

Add the following as a fresh para :—

Provided also, and these presents are upon this express condition, that the license and liberty granted by this lease shall apply to $\frac{\text{Manganese}}{\text{Chromium}}$ ores only, and that in the event of any other metal or metals, mineral or minerals, of economic value being discovered by the lessee within the mining block, the lessee shall forthwith communicate the same in writing to the lessors within a period of sixty days of such discovery, and shall be entitled on application to the lessors, to receive a secondary mining lease in respect of the discovered metal or metals, mineral or minerals; should no such application for a secondary lease be received by the lessors within four months from the date of the report of the discovery of the metal or metals, mineral or minerals, the lessors may at their discretion grant a secondary lease of the particular area containing the other metal or metals, mineral or minerals, to other applicants."

Clause 48.—Substitute "ten" for "thirty."

Clause 49.—Substitute "ten" for "thirty" in the two places in which this word occurs in this clause.

Schedule A.—Add the word $\frac{\text{("Manganese")}}{\text{or ("Chromium")}}$ before "Mining Block."

Schedule B.—Omit.

By Order,
E. W. WETHERELL,
Offg. Secy. to Govt., Geol. Dept.

C

848

The Mysore Gazette

Vol. 41.] PUBLISHED BY AUTHORITY. [No. 26.

BANGALORE, THURSDAY, JUNE 28, 1906.

PART II.

Notifications by Govt. of India, Resident, Chief Court, &c.

FOREST DEPARTMENT.

Notice dated —— *June* 1906.

Under Section 40 of the Mysore Forest Regulation, 1900, it is hereby notified that the log described below, which was found adrift in the Kapila river, is now lying at the Nanjangud Depot. Persons claiming the same, are required to present to the District Forest Officer, Mysore District, a written statement of such claim within a month from the date of this notice, failing which, the ownership of the log in question shall, under Section 42 of the Mysore Forest Regulation, vest in the Government free from all encumbrances.

Kind.	No.	Marks.	Length.		Girth.		Cubical contents.	
			ft.	in.	ft.	in.	ft.	in. pts.
Honne log	H. 02—96	I. L. C.	15	0	6	3	36	7 5

M. G. RAMA RAO,
Dt. Forest Officer, Mysore Dt.

Notification dated 11*th June* 1906.

It is hereby notified for general information that the exclusive privilege of collecting tangadi (*cassia auriculata*) and kakke (*cassia fistula*) barks in Government unoccupied lands in the undermentioned taluks of the Kadur District (excluding State Forests and Plantations situated therein, from 1st July 1906 to the 30th June 1907, will be offered for sale by public auction by the Amildars in conjunction with the Range Officers of respective taluks on the dates and places specified below :—

	Name of taluk	Date of sale	Place of sale
1	Chikmagalur	10th July 1906 ...	Taluk Cutcherry.
2	Kadur	13th July 1906 ...	Do
3	Tarikere	14th July 1906 ...	Do

For terms of sale, see notification published in the Gazette dated 21st June 1906.

B. HEERASINGH,
for *Dy. Comr., Kadur Dist.*

EXAMINATION.

MYSORE LOCAL SERVICE AND PLEADERS' EXAMINATIONS, 1906.

Notification No. 281—*E., dated* 20*th June* 1906.

1. It is hereby notified for general information that the next Mysore Local Service, Revenue, Civil (Parts I and II), Criminal, Excise, Accounts, Registration, Forests, Prisons, Law of Practice and Procedure and Pleaders' Examinations, under the Rules published with Government Notification No. G. 788, dated 11th August 1903, at pages 584-589 of the *Mysore Gazette*, Part I, dated 29th October 1903, will be held on Monday the 19th November 1906 and the following days at the places noted below :—

Bangalore.	Chitaldrug.	Kolar.	Shimoga.
Chikmagalur.	Hassan.	Mysore.	Tumkur.

2. Candidates must send in their applications, prepared in the English language, on printed forms, which may be obtained from Treasury Assistant Commissioners at the head-quarters of each district or from the Secretary to the Board of Examiners, so as to reach the latter on or before the 31st August 1906, after which date no application will be received. Candidates appearing for any of the tests with a view to qualify for admission as Pleaders should distinctly specify it in their application.

3. The following is the sanctioned scale of fees :—

	Rs.		Rs.
Revenue Examination ...	... 7	Forests Examination ...	... 5
Civil Examination (Part I)	... 7	Prisons do ...	... 5
Do (Part II)	... 5	Law of Practice and Procedure	... 7
Criminal Examination ...	... 7	Pleaders' Examinations in all branches, *viz.*, Revenue, Civil and Criminal ...	... 26
Excise Examination ...	.. 5		
Accounts Examination ..	... 5		
Registration Examination	... 5		

The Examinations will be conducted on the days and hours specified below :—

Days	Time	Subject
Monday 19th November 1906 ...	11 to 2	Mysore Land Revenue Code.
	2½ to 5	Mysore Revenue Rules.
Tuesday 20th do ...	11 to 1	Indian Evidence Act.
	2 to 5	Indian Penal Code.
Wednesday 21st do ...	11 to 2	Criminal Procedure Code and Police Rules.
	3 to 5	Indian Contract Act.
Thursday 22nd do ...	11 to 2	Hindu and Muhammadan Law.
	2 to 4	Civil Account Code and Mysore Service Regulations.
	4 to 5½	Registration, Stamp and Court Fees Regulations.
Friday 23rd do ...	11 to 2	Civil Procedure Code and Limitation Act.
	2½ to 5½	Torts and Easements. Jail Manual, Prisons Act, etc., (Parts I and II).
Saturday 24th do ...	11 to 1	Law of Mortgages and Specific Relief Act.
	1½ to 3	Excise Regulation and Opium Act.
	3½ to 5	Forest Regulation.

4. The fee must be paid into the District or Taluk Treasury, and the Treasury Officer's receipt should be attached to the application. The fee should on no account be remitted to the Secretary.

5. The fees paid by candidates will neither be refunded nor reserved for a subsequent Examination.

6. The place of Examination entered in the applications sent in by the candidates cannot be changed except in the case of public officers who are subsequently transferred to another district.

V. A. RAJARATNA MUDALIAR,
Secy. to the Board of Examiners.

POLICE DEPARTMENT.

Dated 20*th June* 1906.

A reward of Rs. 20 is offered to any one who will arrest or will furnish information leading to the arrest of one notorious convict Tindaga of the following description, who escaped

from the Taluk Lock-up at Davangere on the night of the 22nd April 1906 by making an aperture in the roof of the lock-up room (*vide* Chitaldrug District Crime No. 413 of 1905-06) :—

Descriptive Roll.

Name	Tindaga.
Father's name	Kengappa.
Caste	Weaver.
Residence	Benakanahalli in the Kudligi Taluk (Bellary District).
Age	30 years.
Height	5 ft. 3 inches.
Complexion	Fair.
Marks of identification ..	Round face. A dark scar of the size of half a pie on the lower lip. A well built short man.

Particulars of previous convictions :—

He was twice convicted for offence under Section 224, Indian Penal Code, by the Assistant Commissioner and 1st Class Magistrate, Davangere, on the 2nd and 10th February 1906 in Criminal Cases Nos. 27 and 31 of 1905-06 and sentenced to suffer two years' and one year's rigorous imprisonment respectively.

A case of house-breaking and theft which occurred in the Jagalur Taluk, is still pending against him.

The District Superintendent of Police, Chitaldrug, may be kindly communicated with.

F. C. CARE,
Inspector-General of Police.

Dated 5th June 1906.

Descriptive roll of a person found dead under an avenue tree near the bungalow of Revd. Peck in Talkad on 17th March 1906 :—

Name	Not known.
Residence	Do
Caste	Do
Age	About 50 or 55 years.
Complexion	Dark.
Sex	Male.
Description	Has no tuft of hair on the head; has mustaches and hair on the chin.
Property found	Nil.
Remarks	Died of dropsy.

Dated 5th June 1906.

Descriptive roll of a person found dead on 6th April 1906 near the chattram behind Nanjundeswaraswami temple in Nanjangud :—

Name	Not known.
Sex	Male.
Residence	Not known.
Caste	Byragi.
Height	5 feet, 6 inches.
Age	50 years.
Complexion	Dark.
Descriptive marks	Long face; no hair on the head; body emaciated.
Property found	Two pieces of cloth on the body.

MAHOMED JAFFER,
Supt. of Police, Mysore Dt.

MISCELLANEOUS.

BANGALORE DISTRICT.

Abstract Notification dated 6th June 1906.

It is hereby notified that Jodi Pemmanahalli village, Gudemarnahalli hobli, Magadi Taluk, will be sold by public auction in the Magadi Taluk Office on the 13th September 1906 on account of arrears of revenue due to Government.

For further particulars see page 908 of Part II of the *Mysore Gazette* dated 21st June 1906.

T. THUMBOO CHETTY,
for *Dy. Comr.*

Notification.

It is hereby notified that in satisfaction of arrears of land revenue due by the Inamdars of Jodi Yettina Vadearapura village in the Hoskote Taluk for the years from 1900-01 to 1904-05, the said Jodi village of Yettina Vadearapura village will be sold by public auction at Hoskote Taluk office on the 14th September 1906.

For further particulars see Notification published in the *Mysore Gazette* dated 21st June 1906.

T. ROYALOO CHETTY,
for *Dy. Comr.*

Memo dated 18th June 1906.

Under the provisions of Section 37, Criminal Procedure Code, Mr. T. Thumboo Chetty, Assistant Commissioner and 3rd Class Magistrate attached to Bangalore District, is hereby invested with the following additional powers specified in the 4th Schedule :—

1. Power to make orders prohibiting repetitions of nuisances, Section 143, C. P. C.
2. Power to make orders under Section 144, C. P. C.
3. Power to hold inquests, Section 174, C. P. C.
4. Power to take cognizance of offences upon complaint, Section 190, C. P. C.
5. Power to take cognizance of offences upon Police reports, Section 190, C. P. C.

D. DEVARAJ URS,
District Magistrate.

KOLAR DISTRICT.

Abstract Notification dated 11th June 1906.

It is hereby notified that the marginally noted Inam villages of the Kolar District will be sold by public auction on the 23rd July 1906 in the offices of the Amildars of the respective taluks, on account of arrears of revenue due to Government.

1. J. Parayyagaripalli, Srinivaspur Taluk.
2. J. Doddagandlahalli, Bowringpet Taluk.
3. K. Panthanahalli do
4. J. Srinivasasandra do
5. K. Pilavara do

N. B.—For further particulars *vide* Notifications published at pages 909 to 913, Part II of the *Mysore Gazette*, dated 21st June 1906.

C. SESHADRIENGAR,
for *Dy. Comr.*

KOLAR GOLD FIELDS.

PROCEEDINGS OF A SPECIAL MEETING OF THE SANITARY BOARD, KOLAR GOLD FIELDS, HELD ON FRIDAY THE 25TH MAY 1906.

PRESENT.

Ex-officio Members.

1. C. Srikanteswara Iyer, Esq., B.A., B.L., President.
2. R. B. Plumer, Esq., Vice-President.
3. E. S. Krishnaswami Iyer, Esq., District Medical and Sanitary Officer.

Non-official Members.

1. Dr. J. D. O'Donnell, Acting Chief Medical Officer of the Mining Board.
2. Col. T. E. Piercey, Superintendent, Champion Reef.
3. C. H. Richards, Esq., Superintendent, Coromandel Co.
4. P. Bosworth Smith, Esq., Superintendent, Tank Block Co.

ABSENT.

Ex-officio Members.

1. K. Krishna Iyengar, Esq., Executive Engineer, Kolar Division.
2. R. J. M. Mayne, Esq., District Superintendent of Police, K. G. F.
3. R. Bocquet, Esq., Offg. Chief Inspector of Mines.

Non-official Members.

1. R. H. P. Bullen, Esq., Superintendent, Ooregum Co.
2. A. Gifford, Esq., Superintendent, Mysore Mines.

1. Read and considered Government Notification No. 11335—Med. (247-05)-2, dated 3rd May 1906, introducing compulsory vaccination into the Sanitary Board area for a period of six months, and requesting the Board to frame such Bye-laws as may be necessary to give best effect to this measure.

Resolved that Bye-laws on the basis of the draft Bye-laws read, be drawn up by a Sub-Committee composed of the Vice-President, the Chief Medical Officer and the District Medical and Sanitary Officer, after consultation of any Regulations or Bye-laws, regarding compulsory vaccination, which may be in force in the Madras Presidency.

2. Read letter dated 17th May 1906, from the District Medical and Sanitary Officer, informing the Vice-President that the small-pox epidemic is showing signs of abatement, and that two out of the four temporary attendants may be retained permanently to attend all cases of observation for small-pox and cholera.

Resolved that in view of a slight recrudescence in the last few days, no present reduction of establishment is advisable.

3. Read and passed estimates for constructing sheep and beef slaughter houses at Steven's Camp for Rs. 688 and Rs. 685, respectively.

R. B. PLUMER,
for *Offg. Presdt., Sanitary Board.*

TUMKUR DISTRICT.

Memo dated 22nd June 1906.

Under Section 37 of the Criminal Procedure Code, Mr. C. Narayana Rao, B.A., B.L., acting Amildar and 3rd Class Magistrate of Gubbi Taluk, is invested with the following additional powers :—

(1) Power to make orders prohibiting repetition of nuisances, under Section 143, C. P. C.

(2) Power to make orders, under Section 144, C. P. C.

(3) Power to hold inquests, under Section 174, C. P. C.

(4) Power to take cognizance of offences, under clauses (*a*) and (*b*) of Section 190, C. P. C.

K. DORASAMI IYER,
District Magistrate.

MYSORE DISTRICT.

Notification dated 15th June 1906.

It is hereby notified that, in satisfaction of arrears of land revenue due by Narasimha Upadhya and others of Jodi Kannagala village, revenue defaulters, the undermentioned immovable property will be sold by public auction in the office of the Amildar of the Chamrajnagar Taluk on the 17th August 1906. The sale will commence at 11 A.M. and the property will be knocked down to the highest bidder without reserve. The sale will be conducted by the Assistant Commissioner in charge of the Nanjangud group of taluks.

2. The amount of revenue payable by the purchaser on the property for the whole of the year 1905-06 is Rs. 422-4-0 as shown in detail in the statement at foot.

3. The purchaser will be required to deposit twenty-five per cent of the purchase money at the time of sale, and where the remainder of the purchase money may not be paid within fifteen days from the date of the sale, the money so deposited shall be liable to forfeiture.

4. When such deposit shall not be made nor the remaining purchase money paid up, the property shall be re-sold at the expense and risk of the first purchaser.

5. The sale shall be stayed, if the defaulters or any other person acting on their behalf, or claiming an interest in the property, tenders the full amount of the arrears of revenue with the interest and other charges, provided such tender be made before the property is knocked down.

6. The sale of the property will not become absolute until confirmed by the Deputy Commissioner or by some other officer duly authorized to confirm the same.

7. Purchaser having completed the payment of the purchase money, will, as soon as the sale has been confirmed by the Deputy Commissioner, be placed in immediate possession, and the property will be registered in the name of the purchaser, and a certificate of sale signed and sealed by the Deputy Commissioner will be granted to him. It is to be distinctly understood that the Government are not responsible for errors of description or in estimated extent.

8. Provided, parties deeming themselves aggrieved by the sale, shall be at liberty to appeal to the Deputy Commissioner within thirty days from the day of sale, and also to appeal to Government against his order within the time prescribed by law, and the purchase shall be conditional on the final order in such appeal.

SCHEDULE.

Taluk	Hobli	Village	Names of defaulters	Description of property: Buildings: Name of building	Buildings: Estimated value	Land: Number or name of land	Land: Dry, wet or garden	Land: Area	Land: Assessment	Amount of arrears due to Government including notice fees, etc.
								A. g.	Rs. a. p.	
Chamrajnagar	Sante Marahalli	Jodi Kannagala	Narasimha Upadhya and others	Entire village.		Dry ...		265 27	330 0 0	Rs. a. p. 420 12 0
						Wet ...		114 5	548 0 0	1 8 0
						Garden ...		142 20	604 0 0	
						Kharab ..		178 6	2 0 0	
								700 18	1,484 0 0	Notice fees ... 422 4 0
						Amount due to Government— Quit-rent ...		...	928 0 0	
						Local Fund		...	92 12 0	
									1,020 12 0	

Notification dated 18th June 1906.

It is hereby notified that, in satisfaction of arrears of land revenue due by Yagneswarasastri and others, vrittidars of Sarvamanya Tharadale village, Nanjangud Taluk, revenue defaulters, the undermentioned immovable property will be sold by public auction in the office of the Amildar of the Nanjangud Taluk on the 13th August 1906. The sale will commence at 11 A.M. and the property will be knocked down to the highest bidder without reserve. The sale will be conducted by the Assistant Commissioner in charge of the Nanjangud group of taluks.

2. The amount of revenue payable by the purchaser on the property for the whole of the year 1905-06 is Rs. 110-4-8 as shown in detail in the statement at foot.

3. The purchaser will be required to deposit twenty-five per cent of the purchase money at the time of sale, and where the remainder of the purchase money may not be paid within fifteen days from the date of the sale, the money so deposited shall be liable to forfeiture.

4. When such deposit shall not be made nor the remaining purchase money paid up, the property shall be re-sold at the expense and risk of the first purchaser.

5. The sale shall be stayed, if the defaulters or any person acting on their behalf or claiming an interest in the property, tenders the full amount of the arrears of revenue with the interest and other charges, provided such tender be made before the property is knocked down.

6. The sale of the property will not become absolute until confirmed by the Deputy Commissioner or by some other officer duly authorized to confirm the same.

7. Purchaser having completed the payment of the purchase money, will, as soon as the sale has been confirmed by the Deputy Commissioner, be placed in immediate possession, and the property will be registered in the name of the purchaser, and a certificate of sale, signed and sealed by the Deputy Commissioner, will be granted to him. It is to be distinctly understood that the Government are not responsible for errors of description or in estimated extent.

8. Provided, parties deeming themselves aggrieved by the sale shall be at liberty to appeal to the Deputy Commissioner within thirty days from the day of sale and also to appeal to Government against his order within the time prescribed by law, and the purchase shall be conditional on the final order in such appeal.

SCHEDULE.

Taluk	Hobli	Village	Names of defaulters	Description of property						Amount of arrears due to Government including notice fees, etc.
				Buildings		Land				
				Name of building	Estimated value	Number or name of land	Dry, wet or garden	Area	Assessment	
								A. g.	Rs. a. p.	
Nanjangud	Dodda Kowlande	Sarvamanya Tharadale	Yagueswarasastri and others, vrittidars	Entire village ...				1,043 10	1,258 14 0	Rs. a. p. Notice, etc. 109 4 8 ... 1 0 0 Total ... 110 4 8

Boundaries.

East—Gundlupet Taluk.

West—Begur and Gundlupet Taluk.

North—Kudlapura and Mallahalli.

South—Gundlupet Taluk.

Notification dated 18th June 1906.

It is hereby notified that, in satisfaction of arrears of land revenue due by Lakshmipati Pandit, vrittidar of Sarvamanya Husuguru village, Nanjangud Taluk, a revenue defaulter, the undermentioned immovable property will be sold by public auction in the office of the Amildar of the Nanjangud Taluk, on the 13th August 1906. The sale will commence at 11 A.M. and the property will be knocked down to the highest bidder without reserve. The sale will be conducted by the Assistant Commissioner in charge of the Nanjangud group of taluks.

2. The amount of revenue payable by the purchaser on the property for the whole of the year 1905-06 is Rs. 44-10-9 as shown in detail in the statement at foot.

3. The purchaser will be required to deposit twenty-five per cent of the purchase money at the time of sale, and where the remainder of the purchase money may not be paid within fifteen days from the date of the sale, the money so deposited shall be liable to forfeiture.

4. When such deposit shall not be made nor the remaining purchase money paid up, the property shall be re-sold at the expense and risk of the first purchaser.

5. The sale shall be stayed if the defaulter, or any other person acting on his behalf or claiming an interest in the property, tenders the full amount of the arrears of revenue with the interest and other charges, provided such tender be made before the property is knocked down.

6. The sale of the property will not become absolute until confirmed by the Deputy Commissioner, or by some other officer duly authorized to confirm the same.

7. Purchaser having completed the payment of the purchase money, will, as soon as the sale has been confirmed by the Deputy Commissioner, be placed in immediate possession, and the property will be registered in the name of the purchaser, and a certificate of sale, signed and sealed by the Deputy Commissioner, will be granted to him. It is to be distinctly understood that the Government are not responsible for errors of description or in estimated extent.

8. Provided, parties deeming themselves aggrieved by the sale, shall be at liberty to appeal to the Deputy Commissioner within thirty days from the day of sale, and also to appeal to Government against his order within the time prescribed by law, and the purchase shall be conditional on the final order in such appeal.

SCHEDULE.

Taluk	Hobli	Village	Name of defaulter	Description of property: Buildings: Name of building	Buildings: Estimated value	Land: Number and name of land	Land: Dry, wet or garden	Land: Area	Land: Assessment	Amount of arrears due to Government, including notice fees, etc.
Nanjangud	Hullahalli	Sarvamanya Husuguru	Lakshmipati Pandit, vrittidar	Entire village—				A. g.	Rs. a. p.	Rs. a. p.
						Peramboke ...	...	368 9	5 0 0	43 10 9
						Dry ...	...	815 15	611 12 0	Notice fee 1 0 0
						Wet ...	...	8 34	34 0 0	
						Garden ...	..	15 11	48 0 0	Total ... 44 10 9
						Total	...	1,207 29	698 12 0	

Notification dated 18th June 1906.

1. It is hereby notified that, in satisfaction of arrears of land revenue due by Bank Balaji Rao, vrittidar of Sarvamanya Madapur village, Nanjangud Taluk, a revenue defaulter, the undermentioned immovable property will be sold by public auction in the office of the Amildar of the Nanjangud Taluk on the 13th August 1906. The sale will commence at 11 A.M., and the property will be knocked down to the highest bidder without reserve. The sale will be conducted by the Assistant Commissioner in charge of the Nanjangud group of taluks.

2. The amount of revenue payable by the purchaser on the property for the whole of the year 1905-06 is Rs. 41-12-8 as shown in detail in the statement at foot.

3. The purchaser will be required to deposit twenty-five per cent of the purchase money at the time of sale, and where the remainder of the purchase money may not be paid within fifteen days from the date of sale, the money so deposited shall be liable to forfeiture.

4. When such deposit shall not be made, nor the remaining purchase money paid up, the property shall be re-sold at the expense and risk of the first purchaser.

5. The sale shall be stayed, if the defaulter or any person acting on his behalf or claiming an interest in the property tenders the full amount of the arrears of revenue with the interest and other charges, provided such tender be made before the property is knocked down.

6. The sale of the property will not become absolute until confirmed by the Deputy Commissioner or by some other officer duly authorized to confirm the same.

7. Purchaser having completed the payment of the purchase money, will, as soon as the sale has been confirmed by the Deputy Commissioner, be placed in immediate possession, and the property will be registered in the name of the purchaser, and a certificate of sale, signed and sealed by the Deputy Commissioner, will be granted to him. It is to be distinctly understood that the Government are not responsible for errors of description or in estimated extent.

8. Provided, parties deeming themselves aggrieved by the sale, shall be at liberty to appeal to the Deputy Commissioner within thirty days from the day of sale, and also to appeal to Government against his order within the time prescribed by law and the purchase shall be conditional on the final order in such appeal.

SCHEDULE.

Taluk	Hobli	Village	Name of defaulter	Description of property						Amount of revenue due to Government, including notice fee, etc.
				Buildings		Land				
				Name of building	Estimated value	Number or name of land	Dry, wet or garden	Area	Assessment	
								A. g.	Rs. a. p.	Rs. a. p.
Nanjangud	Hullahalli	Sarvamanya Madapur	Bank Balaji Rao, Vrittidar	Entire village—						
				Peramboke ...	...			...	.....	1 15 8
				Dry ...	...			702 3	602 8 0	... 39 13 0
				Wet ...	...			...	.....	...
				Garden ...	...			7 27	24 8 0	For Krodhi Viswavasu 41 12 8
								709 30	627 0 0	Plus interest up to the date of recovery.

H. H. SPARKES,
Dy. Comr.

SHIMOGA DISTRICT.

PROCEEDINGS OF A MEETING OF THE DISTRICT BOARD OF THE SHIMOGA DISTRICT HELD IN THE DEPUTY COMMISSIONER'S OFFICE AT SHIMOGA ON 3RD AND 4TH MAY 1906.

PRESENT.

Ex-officio Members.

1. Mr. M. S. Narayan Rao, Deputy Commissioner and President.
2. „ K. Mathan, B.A., Assistant Commissioner, Honnali Division.
3. „ B. Krishna Rao, do Sagar Division.
4. „ M. Hassan Alli, Treasury Assistant Commissioner and Vice-President.
5. „ C. A. Mahadeva Sastri, B.A., B.C.E., Executive Engineer, Shimoga Division.
6. „ Mahomed Usman, L. M. & S., District Medical and Sanitary Officer.

Non-official Members.

Representatives of Taluks.

7. Mr. Nadiga Sitaramappa, Shimoga.
8. „ Ladi Abdul Karim, Kumsi Sub-Tk.
9. „ Nadiga Gopalappa, Honnali.
10. „ Tagarti Dyavappa, Shikarpur.
11. Mr. Hosabale Thimmappa, Sorab.
12. „ A. Narasimha Iyengar, Sagar.
13. „ Chandrayyana Nagappa, Nagar.

Other Representatives under para 8, clause (e).

14. The Revd. A. E. Nightingale, Shimoga.
15. Mr. Maridevara Gurusiddappa, Honnali.
16. Mr. Virabasappa, Shikarpur.
17. „ Kori Hiriyannappa, Sagar.

ABSENT.

Exofficio Members.

1. Mr. K. Chandy, B. A., Assistant Commissioner, Shimoga Division.
2. „ K. Rangappa, Deputy Inspector of Schools (reported to be sick).

Non-official Members.

3. Mr. Hodigere Adivappa, Channagiri.
4. „ Agumbe Lakshminaranappa, Tirthahalli (wired his inability to attend the meeting).
5. „ T. Bhima Rao, Shimoga.
6. „ Khaji Syed Mahomed, Shimoga.
7. The Revd. Father F. Poulnais, do
8. Mr. Rattehalli Puttappa, Sagar.

1. Read District Fund audited accounts of receipts and disbursements from July to November 1905 :—

	Receipts.			Disbursements.		
	Rs.	a.	p.	Rs.	a.	p.
Opening balance . ..	51,586	3	3	...	...	
July 1905	1,425	7	9	6,578	15	3
August 1905 ..	1,321	4	7	8,197	9	4
September 1905	874	13	6	10,403	5	11
October 1905 . ..	1,039	11	9	11,932	11	4
November 1905	880	8	10	6,308	4	9
Closing balance	...			13,707	3	1
Total .	57,128	1	8	57,128	1	8

Resolution.—Recorded.

2. Read General and Revenue Secretary's docket No. 9679—L. B. (351-05)-2, dated 19th March 1906, stating that the Chief Engineer considers that the mileage allotment of Rs. 100 for the first seven miles of Sagar-Benhatti-Kollurghat road is insufficient, and therefore the matter may be laid before the Board again for consideration.

Resolved that under the special circumstances of the case and on the Executive Engineer's assurance that the increased grant is wanted only for the seven miles now referred to, the rate is raised to Rs. 120 a mile, which is the highest rate hitherto given for any road in the district.

3. Read Letter No. 1822, dated 19th March 1906, from the Chief Engineer requesting to revise the programme of bridge building published in Government Proceedings No. 823-35—4501-13, dated 19th September 1900, and to submit a revised list.

Resolved that the programme be settled as laid down below :—

Order of urgency	River or stream	Name of road
1.	Thungabhadra river ...	Honnali-Harihar road
2.	Varada river ...	Shimoga-Siralkoppa-Hirekavasi road.
3.	Sutha river ...	Kallurkatte-Kollurghat road.
4.	Kodachi river ...	Do
5.	Sharavati river ...	Avinahalli-Karur-Bhatkalghat road.
6.	Varada river ...	Sorab-Siddapur road.
7.	Haridravati river ...	Anantapur-Kallurkatte road.
8.	Sharmanvati river ...	Do
9.	Sharavati river ...	Avinahalli-Kollurghat road.
10.	Do ...	Talguppa-Hamasagar-Bhatkalghat road.
11.	Tunga river ...	Tirthahalli-Koppa road.
12.	Yennehole river ...	Avinahalli-Karur-Bhatkalghat road.

4. Read Government Proceedings Nos. 9079-86—L. B. (315-05)-2, dated 5th March 1906 and 9839-43—L. B. (81-05)-6, dated 23rd March 1906, regarding the levy of tolls on carts of agriculturists passing through the toll-gates, and requesting that the opinion of the Board may be furnished in the matter.

Resolved that the Board are not in favor of any exemption being allowed to raiyats as, if it is allowed, it will lead to complications, but they may be allowed to compound with the Deputy Commissioner by paying a fixed sum per annum.

5. Read Government Proceedings No. 8591-9—L. B. (340-05)-2, dated 19th February 1906, passing orders in the matter of awarding five prizes at a cost of Rs. 100 to the exhibitors of best cattle at the Nandi jatra in the Kolar District.

Resolved that cattle exhibitions be held at Kudli in the Shimoga Taluk and Rampur in the Honnali Taluk, a sum of Rs. 200 being spent in each year. The exhibition to be held at the two places in alternative years. The detailed rules on the subject will be discussed at the next meeting.

6. Read Executive Engineer's docket No. 186, dated 2nd February 1906, requesting to transfer Rs. 210 from "Repairs to buildings" to "Roads under reserve grants" under the same major head "A-II. Repairs."

Resolution.—Sanctioned.

7. Read Executive Engineer's memo No. 408, dated 6th April 1906, forwarding a reappropriation statement of budget grant for Rs. 1,000 within the same major head "A-I. Original works."

Resolution.—Sanctioned.

8. Read Executive Engineer's docket No. 187, dated 9th February 1906, proposing that Rs. 685 provided for tunnels on Anantapur-Tirthahalli road, resolved to be treated as savings, may be appropriated for Sulekere-Davangere road.

Resolved that this cannot be done as the course suggested will interfere with the budget already submitted.

9. Read Executive Engineer's No. 230, dated 22nd February 1906, proposing that a further grant of Rs. 4,000 may be provided for Sulekere-Davangere road as the contractor is working vigorously.

Also his No. 264, dated 3rd March 1906, explaining why this work was carried out in excess of the budget grant.

Resolved that as the completion of this work at an early date is a matter of very great importance, the amount of Rs. 4,000 wanted may be given by reducing the cash balance expected at the end of the year.

10. Read Executive Engineer's docket No. 229, dated 22nd February 1906, forwarding a revised estimate for special repairs to be executed to Godekoppa-Kallurkatte road.

Resolved that the Executive Engineer be requested to send a reappropriation statement providing funds required and suggesting means of finding them.

11. Read Executive Engineer's No. 228, dated 9th March 1906, forwarding an estimate for Rs. 541 for widening the embankment beyond the Varada bridge in 3 & 4—1 of Sagar-Siralkoppa road for disposal.

Resolved that the matter be considered at the next meeting, the Finance Committee in the meantime going over the accounts to suggest how the funds can be provided for.

12. Read Executive Engineer's No. 231, dated 22nd February 1906, forwarding for countersignature, plans and estimate amounting to Rs. 22,400 for opening out Sorab-Anavatti road.

Resolved that the estimate be provisionally sanctioned, and the Executive Engineer requested to inspect the road and see whether any modification can be effected, thereby reducing the cost of the work.

13. Read Executive Engineer's No. 414, dated 5th April 1906, requesting to provide funds for constructing the dispensary at Kumsi. May be considered at this meeting.

Resolved that the resolution of building a dispensary at Siralkoppa first be adhered to (Mr. Mahomed Usman and Mr. Mahadevasastri dissenting).

14. Read estimate for Rs. 316, prepared by the District Sub-Overseer for restoring the breached tank at Bhimaneri, Channagiri Taluk.

Resolved that the subject may lie over for the present.

15. Read memo from the President, stating that in anticipation of approval of the Board, the Assistant Commissioners in charge of groups of taluks have been appointed additional members of the Finance Committee.

Resolution.—Approved.

16. Read yadis Nos. 858, 857, 850, 853 and 846, dated 29th March 1906 and Nos. 985 dated 26th April 1906, 854 dated 29th March 1906, and 779 dated 23rd March 1906, from the President, Shimoga Taluk Board, forwarding estimates for the following works:—

(1) Sinking a draw well at Hanchi-Siddapur (revised estimate for Rs. 581).
(2) Urgent repairs to Courpalais' chattram Rs. 271.

Resolution.—The original estimate of Rs. 1,422 may be submitted to Government for sanction.

(3) Repairing draw well at Arasinagatta Rs. 1,263.
(4) Repairing the well at Hunasekatte Rs. 348.
(5) Deepening the well at Somenakoppa Rs. 135.
(6) Deepening the well at Gadikoppa Rs. 200.
(7) Deepening the well at Devakattikoppa Rs. 216.

Resolution.—The matter is referred to the Finance Committee for report.

17. Read yadi No. 493, dated 10th January 1906, from the President, Shimoga Taluk Board, forwarding an estimate for Rs. 18 for purchasing a new lantern post for Holehonnur Union.

Resolution.—Sanctioned.

18. Read yadi No. 555, dated 14th January 1906, from the President, Shimoga Taluk Board, proposing that a cattle-pound may be established at Vadiyur.

Resolution.—Sanctioned.

The villagers have built the necessary building.

19. Read Kumsi Taluk Board President's yadis Nos. 841 dated 30th March 1906, and 734 dated 2nd March 1906, forwarding estimates for the following works :—

(1) Repairing the draw well at Chordi, Rs. 160.

(2) Repairing cattle-pound at Chordi Rs. 124.

Resolution.—Referred to the Finance Committee for report.

20. Read yadi No. 847, dated 9th February 1906, from the President, Channagiri Taluk Board, forwarding the resolution of the Taluk Board proposing that the Public Works Department inspection lodge at Hosur may be converted into a musafirkhana.

Resolved that the building is not necessary for the purpose stated, as a musafirkhana is not wanted just now at the place.

21. Read yadi No. 1194, dated 9th April 1906, from the President, Channagiri Taluk Board, forwarding an estimate for Rs. 174, for removing lantana plants and tamarind trees in Basavapatna village.

Resolution.—Sanctioned.

22. Read yadi No. 1099, from the President of the Honnali Taluk Board regarding payment of District Fund quota of house rent for locating the Dispensary at Nyamti.

Resolution.—Sanctioned.

23. Read yadi No. 870, dated 9th February 1906, from the President, Channagiri Taluk Board, forwarding the resolution of the Taluk Board, regarding the appointment of a kotwal for the Sulekere travellers' bungalow.

Resolved that it is not necessary.

24. Read yadis Nos. 924 dated 26th February 1906, 1073 dated 20th March 1906, 1166, 1167 and 1168 dated 4th April 1906, from the President of the Shikarpur Taluk Board, forwarding estimates for the following works :—

		Rs.
(1)	Sinking a well at Udagani	686
(2)	Do Gama (revised)	856
(3)	Repairing kitchen attached to musafirkhana at Siralkoppa ..	22
(4)	Repairing the well near do ...	38
(5)	Removing rank vegetation in Udagani village	25

Resolution.—Sanctioned.

25. Read yadi No. 1163, from the President, Shikarpur Taluk Board, forwarding estimates for Rs. 853, for opening roads in Siralkoppa Union and also list of houses to be acquired for the purpose.

Resolution.—Sanctioned.

26. Read yadi No. 1164 dated 5th April 1906, from the President, Shikarpur Taluk Board, stating that Rs. 11 to be paid for permanganate of potash purchased by the Hospital Assistant at Shikarpur may be paid out of District Funds.

Resolution.—Sanctioned.

27. Read yadi No. 1165, dated 4th April 1906, from the President, Shikarpur Taluk Board, forwarding an estimate for Rs. 30 for purchasing vessels for Harogoppa travellers' bungalow.

Resolution.—Sanctioned.

28. Read yadi No. 1169, dated 4th April 1906, from the President, Shikarpur Taluk Board, regarding the collection of fees for temporary market stalls at Togarsi, Belagavi and Basavanandihalli jatras.

Resolution.—The attention of the Taluk Board should be invited to Government Order No. 613-17, dated 24th April 1885, and with reference to it, the Taluk Board be requested to report who is the owner of the land on which these shops are kept.

29. Read yadi No. 997, dated 3rd March 1906, from the President, Sorab Taluk Board, proposing that a cattle-pound may be established at Gudavi.

Resolution.—Sanctioned.

30. Read yadis Nos. 909 dated 18th March 1906, and 904 dated 17th February 1906, from the President, Sorab Taluk Board, forwarding estimates for the following works :—

		Rs.
(1)	Repairing Sakanavalli honda	294
(2)	Sinking a well on the bank of Dandavati river at Sorab ...	580

Resolution.—Referred to the Finance Committee for report.

31. Read yadi No. 893, dated 16th February 1906, from the President, Nagar Taluk Board, proposing that a Native Vaidyasala may be established at Kallurkatte.

Resolved that this is not necessary at present.

32. Read yadi No. 868, dated 3rd February 1906, from the President, Nagar Taluk Board, proposing the appointment of a care-taker for the musafirkhana at Sampekatte.

Resolution.—Sanctioned. The man may be paid Rs. 2 a month.

33. Read yadi No. 661, dated 24th December 1905, from the President, Nagar Taluk Board, proposing that a watchman may be appointed to look after the pond at Kodichadri (deferred Subject No. 28 of last meeting).

Resolved that the care-taker in charge of the travellers' bungalow be directed to look after the pond also.

34. Read yadi No. 849, dated 7th February 1906, from the President, Sagar Taluk Board, forwarding an estimate for Rs. 512 for opening a cart-track from Bangalore-Honnavar road to Hamsagara Hosahalli.

Resolution.—Referred to the Finance Committee for report.

35. Read yadi No. 764, from the President, Tirthahalli Taluk Board, proposing that permission may be granted to keep a boat at Holekoppa for the use of the villagers.

Resolved that this is not a matter in which the Board need take any action.

As it is late adjourned till tomorrow, 4th May 1906.

36. Read yadi No. 763, dated 21st March 1906, from the President, Tirthahalli Taluk Board, regarding the filling up of ruined wells at Changar.

Resolution.—The President promises to inspect the spot. The subject should be brought up at the next meeting.

37. Read report No. 1774, dated 10th April 1906, from the Vice-President, Tirthahalli Taluk Board, forwarding an estimate for Rs. 35 for purchasing vessels for Agumbe musafirkhana.

Resolution.—Sanctioned.

38. Read memo No. 11878, dated 16th March 1906, from the Secretary to Government requesting that the concurrence of the Board may be obtained for the sum of Rs. 3,000 to be paid out of District Funds for sinking temporary wells in the affected parts of this district.

Resolved that the Government be moved to make a grant of the amount from Provincial Funds or Local Funds General, as no funds are available for the purpose from Local Funds.

39. Read docket No. 10559-67—Med. (243-05)-1, dated 11th April 1906, from the Secretary to Government, regarding the proposal made by the Representative Members for accommodation to be provided for female patients to wait at taluk head-quarter dispensaries.

Resolved that the Board do not consider it necessary to provide a separate room for the purpose. The Hospital Assistant in charge can make such arrangements as are necessary to meet the requirements of the special cases.

40. Read docket No. 10422—L. B. (414-05)-1, dated 7—11th April 1906, regarding the establishment of dispensaries at Holehonnur and Basavapatna and appointing native physicians in important villages.

Resolution.—The appointment of a native physician for Basavapatna has been sanctioned and also one for Agumbe. The other cases will receive attention as funds permit.

41. Read Secretary's docket No. 10520-7—L. B. (422-05)-1, dated 11th April 1906, regarding the revision of District Boards establishment by discontinuing to pay batta to members of the District Boards.

Resolved that the present practice of paying travelling allowance to members should not be altered and that the question of revising the scale of establishment be considered at the next meeting.

42. Read Executive Engineer's No. 469, dated 13th April 1906, forwarding a reappropriation statement for transferring Rs. 1,505 within the same major head "A-I. Original works."

Resolution.—Sanctioned.

The Executive Engineer will be asked (see Resolution No. 10) to send up a reappropriation statement providing funds for the Godekoppa-Kallurkatte road.

43. Read yadis Nos. 1100, 1101, 1102, 1103 and 1104, dated 10th April 1906, from the President, Nagar Taluk Board, submitting estimates for the following works:—

(1) Erecting monsoon tattis for Hulikal musafirkhana, Rs. 15.
(2) Repairing musafirkhana at Yedur, Rs. 25.
(3) Do Lakshmipur, Rs. 15.
(4) Do kitchen attached to the above, Rs. 10.
(5) Do musafirkhana at Benavalli and kitchen attached to it, Rs. 110.

Resolution.—Sanctioned with the exception of the estimate of Benavalli musafirkhana. The building in rear will be retained and the materials of the other building sold.

44. Read yadi No. 1232, dated 17th April 1906, from the President, Channagiri Taluk Board, forwarding estimates for Rs. 96-8-0 for repairing furniture and vessels and also for purchase of vessels and furniture required for Sulekere travellers' bungalow.

Resolution.—Sanctioned for Rs. 74.

45. Read yadi No. 1231 from the President, Shikarpur Taluk Board, suggesting that the cattle-pound at Narasapur may be abolished.

Resolution.—Sanctioned.

46. Read Government Proceedings No. 8368-85—L. B. (120-03), dated 12th February 1906, observing that the provisions of Section III. of the Village Sanitation Rules of 1898, may be given effect to and report submitted by the 15th of July 1906.

Resolution.—The Assistant Commissioners in charge of groups of taluks will be requested to give special attention to this subject.

47. Read yadi No. 929, dated 18th April 1906, from the President, Shimoga Taluk Board, forwarding estimates amounting to Rs. 674 for repairing roads, etc., in Holehonnur Union and suggesting that this amount may be used for Holehonnur-Kanesara road.

Resolution.—The Board are unable to sanction this proposal, as the income of the Union has to be spent within the limits of the Union.

48. Read yadi No. 913 from the President, Tirthahalli Taluk Board, submitting an estimate for Rs. 408 for sinking a well near the toll-gate at Agumbi.

Resolved that the work is one of great urgency, but the estimate will be referred to the Finance Committee to report how funds can be provided for it.

49. Read yadi No. 914, from the President, Tirthahalli Taluk Board, proposing that the "santhe" may be permitted to be held at Tudur on Sundays tentatively for one year.

Resolution.—Sanctioned as an experimental measure for one year.

50. Read yadis Nos. 983, 984 and 986, dated 26th April 1906, from the President, Shimoga Taluk Board, forwarding the undermentioned estimates:—

(1) Revised estimate for deepening the well at Vaddarhalli, Rs. 370.
(2) Sinking a well at Navale, Rs. 470.
(3) Sinking a well near Holalur travellers' bungalow, Rs. 510.

Resolution.—Referred to the Finance Committee for report.

51. Read docket No. 499—24th April 1906, from the Executive Engineer suggesting that a resolution may be passed for flooring all the dispensaries with Mangalore tiles or Cuddapah slabs.

Resolved (1) The Board consider the work very desirable and should be carried out a funds become available.
(2) So much of the work as can be done from funds at the disposal of the Senior Surgeon for repairing dispensaries, etc., during 1906-07, should be done next year.
(3) Provision will be made for the remainder in the budget for 1907-08.
(4) The Executive Engineer should be requested to send a statement showing the probable cost that will have to be incurred for this purpose.

52. Read Comptroller's docket No. 884, dated 24th February 1906, stating that the re-appropriation proposed for contribution to be given to construct Chamaraj Memorial Hall cannot be approved and that it should be met from some other source.

Resolution.—The President will send a reply to the Comptroller stating that the rule quoted by him is not applicable to the case now in question.

53. Read Executive Engineer's docket No. 503, dated 26th April 1906, forwarding for countersignature an estimate amounting to Rs. 4,931 for gravelling Tirthahalli-Hulikal road.

Resolved that the matter be considered at the time the budget for 1907-08 is prepared.

54. Memo from the President stating that he has sanctioned the estimates of the works noted below in anticipation of the approval of the Board. The necessity of sanctioning them in anticipation of the Board's approval was explained:—

		Rs.
1	Katte at Bhimanere	131
2	Do do	240
3	Nagodi-Kodichadri road repairs	180
4	Karnighat road	200
5	Hegevadighat road	200
6	Govardhanagirighat	200
7	Hennighat	200
8	Repairing Kodur musafirkhana	75
9	Do cattle-pound at Riponpet	50
10.	Clearing silt in Ayanur well	50
11.	Revetting the well in Mulkere	205
12.	Filling up pits and repairing roads in Hiregonigere (finally revised estimate)	450
13.	Removing rank vegetation at Pillangere	50
14.	For sanitation on jatra occasions for the following jatras: Togarsi, Belagavi and Basavanandihalli.	

Resolution.—Approved.

55. Read list of estimates received from the Executive Engineer and returned countersigned by the President in anticipation of the sanction of the Board, as the works were urgent.

Resolution.—Approved.

56. The following Proceedings of Government were read and recorded :—

1. No. 9746-7—L. B. (361-05)-2, dated 21st March 1906, sanctioning the additional grant of Rs. 2,500 from District Funds for completion of Chamraj Memorial Hall at Shimoga.
2. Nos. 9030-43—Med. (91-05)-9, dated 3rd March 1906 and 10303-7—Med. 122-05, dated 5th April 1906, passing orders regarding the repairs to be executed to dispensaries.
3. No. 7460-78—Ml. (370-05)-1, issuing instructions in the matter of the submission of supplement and revised budgets by the Presidents of Municipalities and District Boards.
4. No. 7187-98—L. B. (267-05)-2, dated 10th January 1906, directing that in future all expenditure to be incurred on account of incomplete works of previous years should be met by re-appropriation from the existing grants in the budget as no re-grant of lapses is admissible under the budget rules.
5. No. 9789-93—L. B. (335-05)-2, sanctioning a sum of Rs. 4,000 from Local Funds General on account of special repairs to Benkipur-Umblibyle road.

57. Resolved that the next meeting be held on Monday the 6th August 1906.

M. S. NARAYAN RAO,
President.

KADUR DISTRICT.

Notice dated 4th June 1906.

The right of collecting fees at the weekly market in the Koppa Municipality for the official year, *i. e.*, from 1st July 1906 to the 30th June 1907, will be sold by public auction by the Amildar of Koppa at his office on Monday the 25th June 1906, at 11 A. M.

For further particulars please see Notification dated 14th June 1906, published at page 886 Part II of the *Mysore Gazette.*

V. KRISHNA RAO,
for *Presdt., Munl. Boards, Kadur Dist.*

IN THE COURT OF THE MUNSIFF OF DODBALLAPUR.

Miscellaneous Case No. 462 *of* 1905-06.

PRESENT :—M. L. SREEKANTESA GOWDA, ESQ., B.A., B.L., MUNSIFF.

In the matter of the estate of Nanjamma, resident of Srotriya Manesandra Grama, Hindupur Taluk, Anantapur District ... *Deceased.*

1. Sethubayamma, 2. Sakamma, minor by guardian, husband Seshagiri Rao ... ... *Petitioners.*

Whereas Sethubayamma and Sakamma, claiming to be the daughters of Nanjamma, deceased, have applied to this Court for a certificate under Regulation VII of 1901, to collect debts to the extent of Rs. 460 payable in respect of Nanjamma, deceased, resident of Srotriya Manesandra Grama, Hindupur Taluk, Anantapur District.

Notice is hereby given of the said application; and all claimants in the estate of the said Nanjamma, deceased, are invited to appear in this Court on Thursday the 26th day of July 1906, when the petition of the said Sethubayamma and Sakamma, the applicants, will be heard and the right to the certificate determined.

Given under my hand and seal of the Court this 22nd day of June 1906.

M. L. SREEKANTESA GOWDA,
Munsiff.

IN THE COURT OF THE MUNSIFF AT KOLAR.

Mis. Application No. 499 *of* 1905-06.

In the matter of the estate of Arcot Krishnachar, resident of Kolar ... *Deceased.*

Ganga Bhayi *alias* Radha Bhayi ... ... *Applicant.*

Whereas Ganga Bhayi *alias* Radha Bhayi, resident of Kolar, claiming to be the wife of the said Arcot Krishnachar, deceased, has applied to this Court for a certificate under Regulation VII of 1901, to collect debts payable to the extent of Rs. 867 in respect of the estate of the said Arcot Krishnachar, deceased, resident of Kolar.

Notice is hereby given of the said application; and all claimants in the estate of the said Arcot Krishnachar, deceased, are invited to appear in this Court on Tuesday the 3rd day of July 1906, when the petition of the said Ganga Bhayi *alias* Radha Bhayi, applicant, will be heard and the right to the certificate will be determined.

Given under my hand and the seal of the Court, this 19th day of June 1906.

J. HOLT,
Munsiff.

IN THE COURT OF THE MUNSIFF, KOLAR GOLD FIELDS.

Miscellaneous Case No. 294 *of* 1905-06.

In the matter of the estate of Khader Mohadin, resident of Tirupatoor *Deceased.*

T. H. Gouse Sabee, resident of Tirupatoor ... ... *Applicant.*

Whereas the applicant T. H. Gouse Sabee, resident of Tirupatoor, claiming to be the father of the said Khader Mohadin, deceased, has applied to this Court for a certificate under Regulation, VII of 1901, to collect debts payable in respect of the estate of Khader Mohadin, deceased, resident of Tirupatoor.

Notice is hereby given of the said application; and all claimants in the estate of the said Khader Mohadin, deceased, are invited to appear in this Court on Tuesday the 3rd day of July 1906, when the petition of the said T. H. Gouse Sabee, applicant, will be heard and the right to the certificate will be determined.

Given under my hand and the seal of the Court this 19th day of June 1906.

T. S. A. D'CRUZ,
Munsiff.

IN THE COURT OF THE MUNSIFF OF MADDAGIRI.

Insolvency Miscellaneous Case No. 179 *of* 1905-06.

In the matter of the application of Doddanarasiah, son of Narasimiah, resident of Manuvinakurke, Koratagere Sub-Taluk, praying to be declared an insolvent.

The above application coming on for hearing before T. Venkoba Rao, Esq., B.A., B.L., in the presence of Mr. H. Sreenivasa Iyengar, Pleader for the petitioner, and Hucha, 1st counter-petitioner, other counter-petitioners being absent *ex parte,* it is ordered that the said Doddanarasiah be declared an insolvent.

SCHEDULE OF DEBTS.

No.	Name of creditor	Amount	When contracted
		Rs. a. p.	
1	Hucha, resident of Kurubarapalya, Koratagere Sub-Taluk ...	140 0 0	Due under decree in O. S. 174 of 04-05, on the file of this Court.
2	Jwalanappa, resident of Tovinkere, Koratagere Sub-Taluk ...	200 0 0	
3	Nemarajasetty, resident of Manuvinkurke, Koratagere Sub-Taluk ...	150 0 0	Due under a bond.
4	Channabasanna do ..	50 0 0	Do
5	Channabasanna, son of Gubbi Naganna, resident of Manuvinkurke, Koratagere Sub-Taluk ...	50 0 0	Do

Given under my hand and the seal of the Court, this the 20th day of June 1906.

Insolvency Miscellaneous Case No. 206 *of* 1905-06.

In the matter of the application of Chikkegowda of Mallanaikanhalli, Maddagiri Taluk.

The above application coming on for hearing before T. Venkoba Rao, Esq., B.A., B.L., in the presence of Mr. H. Srinivasa Iyengar, Pleader for the petitioner, counter-petitioners being absent *ex parte,* it is ordered that the said Chikkegowda be declared an insolvent.

SCHEDULE OF DEBTS.

No.	Name of creditor	Amount	When contracted
		Rs. a. p.	
1	Sriram Bhimiah of Midigesi ...	142 8 6	Due under decree in O. S. 583 of 1896-97 on the file of this Court.
	Do ...	42 0 0	Due under a bond.
2	Ramachar of Appaiyanahalli, Maddagiri Taluk.	90 0 0	Due under a plain paper bond.

Given under my hand and the seal of the Court, this the 20th day of June 1906.

PRESENT: T. VENKOBA RAO, ESQ., B.A., B.L., MUNSIFF.

Miscellaneous Application No. 274 *of* 1905-06.

In the matter of the estate of Honnappa ... ... *Deceased.*
Muddaveeramma ... ... *Applicant.*

Whereas Muddaveeramma, resident of Chandragiri, Maddagiri Taluk, claiming to be the widow of the said Honnappa, deceased, has applied to this Court for a certificate under Regulation VII of 1901, to collect debts payable in respect of the estate of Honnappa, deceased, resident of Chandragiri, Maddagiri Taluk.

Notice is hereby given of the said application; and all claimants in the estate of the said Honnappa, deceased, are invited to appear in this Court on Friday the 10th day of August 1906, when the petition of the said Muddaveeramma, applicant, will be heard and the right to the certificate will be determined

Given under my hand and the seal of the Court, this 20th day of June 1906.

T. VENKOBA RAO,
Munsiff.

IN THE COURT OF THE MUNSIFF OF SERINGAPATAM.

Miscellaneous Case No. 783 *of* 1905-06.

PRESENT: G. SATHYAJI RAO, ESQ., B.A., B.L., MUNSIFF.

In the matter of the estate of Vidyaschar, resident of Seringapatam ... *Deceased.*
Vitalachar ... ... *Applicant.*

Whereas Vitalachar, claiming to be the heir as a reversioner to Vidyaschar, deceased, has applied to this Court for a certificate under Regulation VII of 1901, to collect debts to the extent of Rs. 185 payable in respect of the estate of Vidyaschar, deceased, resident of Seringapatam.

Notice is hereby given of the said application; and all claimants in the estate of the said Vidyaschar, deceased, are invited to appear in this Court on Wednesday the 15th day of August 1906, when the petition of the said Vitalachar, the applicant, will be heard and the right to the certificate will be determined.

Given under my hand and the seal of the Court, this the 16th day of June 1906.

Miscellaneous Case No. 624 *of* 1905-06.

In the matter of the estate of Venkatagiriah, resident of Ganjam, Seringapatam Taluk ... ... *Deceased.*
Alamalamma, minor, by guardian grandmother Venkatamma .. *Applicant.*

Whereas the applicant Alamalamma claiming to be the daughter of the deceased Venkatagiriah, has applied to this Court for a certificate under Regulation VII of 1901, to collect debts to the extent of Rs. 565-2-7 payable in respect of the estate of Venkatagiriah, deceased, resident of Ganjam, Seringapatam Taluk.

Notice is hereby given of the said application; and all claimants in the estate of the said Venkatagiriah, deceased, are invited to appear in this Court on Wednesday the 18th day of July 1906, when the petition of the said Alamalamma, the applicant, will be heard and the right to the certificate will be determined.

Given under my hand and the seal of the Court, this 16th day of June 1906.

G. SATHYAJI RAO,
Munsiff.

IN THE COURT OF THE MUNSIFF OF CHITALDRUG.

PRESENT: S. KRISHNA RAO, ESQ., B.A., B.L., MUNSIFF.

Insolvency Miscellaneous Case No. 634 *of* 1905-06.

In the matter of the application of Sidda, son of Ranga, resident of Medekerenayakanakote, praying to be declared an insolvent.

The above application coming on for hearing before S. Krishna Rao, Esq., B.A., B.L., in the presence of Messrs. L. Sreenivasa Rao and B. Vedanta Iyengar, Pleaders for the petitioner and counter-petitioner, respectively, it is hereby ordered that the said Sidda be declared an insolvent:—

No.	Name of creditor	Amount	When contracted
		Rs. a. p.	
1	Bandlu Bheemanna, resident of Basappana Malige, Chitaldrug Taluk.	39 6 0	Due under a decree of this Court in Small Cause No. 309 of 1904-05.

Given under my hand and the seal of the Court this the 15th day of June 1906.

Insolvency Miscellaneous Case No. 595 *of* 1905-06.

In the matter of the application of Hottappa, son of Vobanayaka, resident of Abbina Hole, praying to be declared an insolvent.

The above application coming on for hearing before S. Krishna Rao, Esq., B.A., B.L., in the presence of Messrs. R. Srinivasa Rao for Mr. M. Raja Rao, A. Singrachar and B. Lakshminaranappa, pleaders for the petitioner, 1st counter-petitioner and 2nd counter-petitioner, respectively, other counter-petitioners being absent ex-parte, it is ordered that the said Hottappa be declared an insolvent and that Batni Sripathi Rao, the Deputy Nazir of this Court, be appointed as receiver of the insolvent's property.

Schedule of debts.

No.	Name of creditor	Amount	When contracted
		Rs.	
1	Dodda Virupakshappa, resident of Babur, Hiriyur Taluk ...	170	Due under a decree in O. S. No. 97 of 1902-03 on the file of the late Chitaldrug Munsiff's Court.
2	Channamma *kom* Gurupadayya, resident of Sidlayyanakote, Hiriyur Taluk ...	50	Due under a decree.
3	Government (Mr. H. Ramanuja Iyengar, Deputy Commissioner, Chitaldrug District)	250	Takavi amount due to Government.
4	Hanumegowda, resident of Gulya, Hiriyur Taluk	150	Due under a decree.
5	Gollara Giddajja, resident of Gollarhatti, Hiriyur Taluk	20	Due under a bond.

Given under my hand and the seal of the Court, this the 1st day of June 1906.

S. KRISHNA RAO,
Munsiff.

WATER-SUPPLY AND STORES DIVISION.

Notification, dated 15*th June* 1906.

Notice is hereby given that sealed tenders will be received at the office of the Executive Engineer, Water-Supply and Stores Division, up to the 15th July 1906, for supply of 3,000 tons of jungle fuel to Pumping Station at Soldevanahalli. An approximate estimate of quantities is given below. These quantities are not guaranteed. The work should be completed by the end of June 1907.

2. The conditions may be seen at the Executive Engineer's office at Bangalore, between the hours of 11 A.M. and 5 P.M.

3. Tenders should be submitted on printed forms which may be obtained from the Executive Engineer. The tenders should be accompanied by a statement in the form given below, showing the rates at which the different items specified will be executed.

4. Each tender must be accompanied by a deposit of Rs. 500 in cash or Government Promissory notes, as earnest money, and be superscribed " tender for supply of jungle fuel to Pumping Station at Soldevanahalli," in default of which, tenders will be rejected.

5. The final acceptance of any tender will rest with the Chief Engineer, who does not bind himself to accept the lowest or any tender or to assign any reason whatever for the rejection of any tender.

6. Within eight days of the acceptance of the tender, the successful competitor will be required to execute the usual contract bond; in default of which, his tender will be considered cancelled, and his earnest money will be forfeited.

7. The name of the successful competitor, whose tender has been accepted, will be posted on the notice board in the Executive Engineer's office in due course. No enquiries regarding the acceptance or rejection of a tender will receive any reply.

8. On acceptance of one of the tenders, the earnest money on rejected tenders will be returned.

V. RUNGASWAMY IYENGAR,
Executive Engineer.

MYSORE DIVISION.

Abstract.

Invites attention to the notification published in the *Mysore Gazette*, dated 31st May 1906, page 823, Part II, inviting tenders for repairing Kagalwadi tank, Registered No. 48, Chamrajnagar Taluk.

Notice dated 4th June 1906.

A sum of Rs. 107-6-11 (Rupees one hundred and seven, annas six and pies eleven) being the amount deposited as security, due to Taluk Mestri R. Guru Rao, deceased, is outstanding in the deposit accounts since May 1905.

The legal heir of the deceased is hereby informed that he should present himself before the undersigned with necessary certificate to receive payment of the amount within a month from the date of this notice. Failing to do so, the amount will be credited to Government as unclaimed.

B. SUBBA RAO,
Executive Engineer.

MYSORE PALACE DIVISION.

Notification.

Notice is hereby given that sealed tenders will be received at the office of the Executive Engineer, Palace Division, at Mysore up to 10th July 1906, for the supply of pipes, valves, etc., required for the Water-supply and Fire Protection Scheme for the Palace at Mysore. An approximate estimate of quantities is given below. These quantities are not guaranteed. Prices to be quoted for delivery at Railway Station at Mysore, and delivery to be completed within two months from the date of acceptance of the tender.

2. The pipes should be in accordance with the specification given below. Separate tenders for steel pipes for 8″ main may also be forwarded.

3. Tenders should be submitted on printed forms, which may be obtained from the Executive Engineer. The tender should be accompanied by a statement in the form given below, showing the rates at which the different items specified will be executed.

4. Each tender must be accompanied by a deposit of Rs. 300 in cash or Government promissory notes as earnest money, and be superscribed "Tender for the supply of pipes, bends, valves, etc., required for the Water-supply and Fire Protection Scheme for the Palace at Mysore," in default of which, tenders will be rejected.

5. The final acceptance of any tender will rest with the Chief Engineer, who does not bind himself to accept the lowest or any tender or to assign any reason whatever for the rejection of any tender.

6. Within eight days of the acceptance of the tender, the successful competitor will be required to execute the usual contract bond, in default of which, his tender will be considered cancelled, and his earnest money will be forfeited.

7. The name of the successful competitor, whose tender has been accepted, will be posted on the notice board in the Executive Engineer's office in due course. No enquiries regarding the acceptance or rejection of a tender will receive any reply.

8. On acceptance of one of the tenders, the earnest money on rejected tenders will be returned.

SPECIFICATION.

Pipes.—The whole of the pipes to be of uniform bore and thickness of metal throughout and of the full specified diameters. They must be of the best quality and perfectly free from sand, air-holes and defects of any kind. All pipes should have the depth of socket in accordance with the statement. All pipes should be properly rendered with Dr. Angus Smith's patent solution.

The whole of the pipes to be capable of standing a proof pressure equal to a head of 500 feet. Any pipes found defective after due examination by this Department, to be replaced at contractor's expense.

Valves.—All valve facings and spindle screws to be of the best gun-metal and all working parts to be delivered accurately finished, fitted and adjusted. Each sluice valve to be capable of standing the same pressure test as the pipes.

Approximate estimate of quantities of pipes, valves, etc., required for the Water-supply and Fire Protection Scheme for the Palace at Mysore.

Items of work	Per	Quantity				Approximate number required
		Tons	Cwt.	Qrs.	lbs.	
8″ main pipe from pure water tank of Mysore Town Water-supply to the storage tank at the Palace—						
Cast iron straight pipes 8″ diameter, pipes in 9′ lengths, with turned and bored spigot and socket joints in accordance with the above specification		141	8	1	7	767
Do with spigot and socket ends not turned and bored		35	8	...	...	192
Irregular pipes, bends of different angles 6′ length and 8″ diameter		1	2	2	...	15
8″ diameter T. pipe with 3″ diameter, single branch		...	4	2	...	2
Pipes 6′ in length with 8″ diameter, single branch		...	2	2	7	1
3″ branch to Jaganmohan Palace—						
3″ diameter pipes in 9′ lengths, with spigot and socket ends turned and bored ...		1	15	...	...	35
Irregular pipes 3″ diameter, ¼ bends ..		...	...	3	...	2
3″ diameter T. pipes with 3″ single branch.		...	...	5	...	2
Outside fire protection main—						
6″ diameter pipe in 9′ lengths with spigot and socket ends turned and bored ...		25	7	2	...	203
Irregular pipes, ¼ bends		...	12	1	4	16
Do ⅛ bends		...	2	..	...	2
T. pipes 6′ in length with 6″ single branch		1	4	...	...	12
Do do with 6″ double branch		...	4	2	...	2
Inside fire protection mains—						
3″ diameter pipes in 9′ lengths with spigot and socket ends turned and bored ...		8	18	...	...	178
Irregular pipes, ¼ bends		...	10	3	14	29
Do ⅛ bends		...	2	2	..	4
T. pipes 6′ in length with a single 3″ branch		...	11	3	4	19
8″ valves with 4 gun metal faces, gun metal screws, and nut stuffing box gland with 8″ diameter spigot and socket tail pieces fitted to flanges of valves with bolts and nuts, complete						...
Regulating valves						3
Scour valves						2
Air valves						1
Cast iron shutters for manholes or valve cisterns						10

STATEMENT OF CAST IRON PIPES.

Length of each pipe in feet	Diameter of pipe in inches	Thickness of metal in inches	Depth of socket in inches	Straight pipes: Turned and bored ends	Ends not turned and bored	Flanged at one end for expansion joints	Average weight for each pipe: Cwts.	Qrs.	lbs.	No. of cast iron pipes	Total weight: Tons	Cwts.	Qrs.	lbs.	Irregular pipes	Approximate weight for each: Cwt.	Qrs.	lbs.	Number of pipes	Total weight: Tons	Cwts.	Qrs.	lbs.	To be tested to proof	Permitted variation in weight of pipes
8″ Main line from pure water tank of the Water-supply of Mysore Town to the storage tank at the Palace.																									
9′	8″	½″	4″	767	192	...	3	2	21	959	176	16	1	7	Bends of different angles.	1	2	...	15	1	2	2	...		
															6-foot pipes with 8-inch single branch.	2	2	7	1	...	2	2	7		
															3-foot pipes with 3-inch single branch.	2	1	...	2	...	4	2	...		
3″ Branch to Jaganmohan Palace.																									
9′	3″	11/32″	3½″	35	.....	...	1	...	...	35	1	15	...	...	¼ Bends	...	1	14	2	...	..	3	...		
															6-foot pipes with 3-inch single branch	...	2	14	2	...	...	5	...		
Outside fire protection system.																									
9′	6″	7/12″	8¾″	203	...	...	2	2	...	203	25	7	2	...	¾ Bends	...	3	2	16	...	12	1	4		
															⅛ Bend	1	...	...	2	...	2	...	...		
															6-foot pipes with 6-inch single branch.	2	...	...	12	1	4	...	...		
															Pipes with 6-inch double crossing.	2	1	...	2	...	4	2	...		

B. P. RAGHAVALU NAIDU,
Executive Engineer, Palace Division.

BANGALORE CITY MUNICIPALITY.

Revised Draft Bye-Law No. 3 for the purpose of regulating the levy and collection of Octroi duties in the Bangalore City.

It shall not be lawful for any person to sell, either by wholesale or retail, the following articles liable to Octroi without a license :—

1. Tobacco in any form. | 2. Betel-leaves.

For the purpose of this rule, the license fees shall be as follows :—

				Rs.	a.	p.	
Wholesale dealers	...	...	...	5	0	0	per annum.
Retail dealers	...	...	...	1	0	0	

Notice dated 25th June 1906.

It is hereby notified for general information that dogs found straying apparently ownerless within the City Municipal limits will in future be destroyed throughout the year, commencing from 1st July 1906.

2. All persons owning dogs are requested to have them tied up or, if allowed to stray, to have collars put on them.

Notice dated 26th June 1906.

The public are hereby informed that the hollow ground to the east of Sri Rameswara temple on the I Main Road in Chamrajendrapete, measuring 11,560 sq. ft. will be sold by public auction by the Municipality on the morning of Monday the 9th proximo, commencing at 8 O'clock.

2. The purchaser should deposit at the time of sale 25 per cent of the purchase money and pay the remainder within fifteen days from the date of sale, failing which the land will be re-sold at the risk of the first purchaser.

3. The officer conducting the sale reserves the power of accepting or refusing the highest bid.

4. The sale is subject to the purchaser binding himself to fill in the pit within one year from the date of his taking possession of it and in default, to relinquish the ground to the Municipality unconditionally, forfeiting the purchase money.

A. S. NAGAVKAR,
President.

BOWRINGPET MUNICIPALITY.

Notice dated 1st June 1906.

Notice is hereby given that sealed tenders will be received up to 11 A.M. on 30th June 1906, by the Vice-President of the Bowringpet Municipality for the right to collect fees on grains, bullocks, sheep, vegetables, etc., at the weekly market in the Bowringpet Municipality for the year 1906-07.

Further details can be ascertained on application to the Vice-President.

C. SESHADRIENGAR,
for *President.*

GOVERNMENT CENTRAL BOOK DEPOT, BANGALORE.

Notification dated 12th June 1906.

Copies of the Kannada Lower Secondary Text for 1906 are available for sale at the Government Central Book Depot. Price 3 annas a copy.

S. ABDUL HAI, *Curator.*

CINCHONA FEBRIFUGE.

Cinchona Febrifuge can be purchased by all Government Officers and by any one taking *six pounds* at a time from the Superintendent, Botanical Garden, Calcutta, at the following rates :—Per four-ounce tin, *Rs.* 2-8 ; per eight-ounce tin, *Rs.* 5 ; per pound tin, *Rs.* 10. The general public can be supplied by the Superintendent, Botanical Garden, *for Cash only*, at the undernoted rates :—Per four-ounce tin, *Rs.* 3 ; per eight-ounce tin, *Rs.* 6 ; per pound-tin, *Rs.* 12. This medicine is also sold by the principal European and Native Druggists in Calcutta. Postage—four annas per four-ounce tin, eight annas per eight-ounce tin, and twelve annas per pound-tin in addition to the foregoing rates.

MYSORE GOVERNMENT METEOROLOGICAL DEPARTMENT.

Daily Means of Observations for the Week Sunday 10th to Saturday 16th June 1906.

No.	BANGALORE	Sunday 10	Monday 11	Tuesday 12	Wednesday 13	Thursday 14	Friday 15	Saturday 16
1	Barometer red. to 32° F.	26·900	26·865	26·801	26·803	26·839	26·856	26·796
2	Daily Barometric range	·099	·138	·138	·090	0·64	·076	·082
3	Mean Dry Temperature in shade	75·6	76·6	75·9	73·6	69·8	70·7	73·1
4	Maximum do	85·3	89·6	83·8	84·1	76·1	80·2	82·4
5	Minimum do	6 ·8	70·8	68·1	66·9	65·4	64·1	65·3
6	Daily range of do	19·5	18·8	15·7	17·2	10·7	16·1	17·1
7	Mean Wet Temperature in shade	69·0	70·0	69·5	69·1	67·4	66·1	67·0
8	Minimum do	64·5	66·8	65·8	65·4	65·1	63·2	64·1
9	Pressure of Aqueous Vapour	657	·688	·667	·670	·650	·599	·600
10	Humidity	68	74	73	78	86	76	71
11	Wind Vely. in Miles p. day to 8 A. M	233	131	154	217	249	264	264
12	Mean Wind Direction	N W b W	W	W	W	W S W	W	W
13	Rainfall in inches to 8 A.M.	0·52	0	1·05	0·43	0·70	0·06	0·30
14	Total Rainfall from 1st January	4·29	4·29	5·34	5·77	6·47	6·53	6·83
15	Per cent of Cloudy Sky	90	73	90	97	100	93	90
16	Character of Weather	Thunder storm	Distant lightning	Thunder storm	Distant thunder and lightning	Continuous rain	Passing showers	Showery

MYSORE GOVERNMENT METEOROLOGICAL DEPARTMENT.

Daily Means of Observations for the Week Sunday 10th to Saturday 16th June 1906.

No.	MYSORE	Sunday 10	Monday 11	Tuesday 12	Wednesday 13	Thursday 14	Friday 15	Saturday 16.
1	Barometer red. to 32° F.	27·373	27·348	27·310	27·318	27·361	27·360	27·309
2	Daily Barometric range	·107	·165	·116	·087	·071	·078	·073
3	Mean Dry Temperature in shade	80·5	79·8	78·0	74·7	71·8	73·7	74·8
4	Maximum do	90·6	93·0	89·8	83·9	79·1	86·0	85·5
5	Minimum do	71·1	70·1	71·0	67·8	67·0	65·9	66·7
6	Daily range of do	19·5	22·9	18·8	16·1	12·1	20·1	18·8
7	Mean Wet Temperature in shade	69·0	70·0	68·7	67·0	67·0	66·9	67·1
8	Minimum do	67·1	66·8	65·3	65·6	64·9	63·0	63·0
9	Pressure of Aqueous Vapour	·569	·620	·609	·542	·603	·586	·571
10	Humidity	52	60	60	58	72	64	59
11	Wind Vely. in Miles p. day to 8 A.M.	296	197	247	298	360	309	346
12	Mean Wind Direction	W N W	S W b W	S W b W	W	W S W	S W b W	W b S
13	Rainfall in inches to 8 A.M.	0	0	0	0·14	0·02	0	0·02
14	Total Rainfall from 1st January	5·63	5·63	5·63	5·77	5·79	5·79	5·81
15	Per cent of Cloudy Sky	87	77	100	90	100	100	87
16	Character of Weather	Cloudy	Fine passing clouds	Cloudy	Cloudy	Gloomy	Cloudy	Cloudy

871

MYSORE GOVERNMENT METEOROLOGICAL DEPARTMENT.

Daily Means of Observations for the Week Sunday 10th to Saturday 16th June 1906.

No.	HASSAN	Sunday 10	Monday 11	Tuesday 12	Wednesday 13	Thursday 14	Friday 15	Saturday 16
1	Barometer red. to 32° F.	26·847	26·821	26·773	26·767	26·814	26·818	26·766
2	Daily Barometric range	·084	·137	·098	·079	·064	·068	·070
3	Mean Dry Temperature in shade	77·9	75·3	74·1	72·3	70·7	72·5	72·7
4	Maximum do	90·0	88·6	84·1	82·7	79·6	85·0	85·4
5	Minimum do	67·5	67·4	67·7	65·2	65·7	64·0	65·1
6	Daily range of do	22·5	21·2	16·4	17·5	13·9	21·0	20·3
7	Mean Wet Temperature in shade	68·2	69·7	68·8	67·1	66·7	66·3	66·7
8	Minimum do	65·5	65·5	65·9	63·8	64·4	62·6	63·6
9	Pressure of Aqueous Vapour	·563	·648	·635	·593	·604	·579	·596
10	Humidity	53	73	66	66	75	68	68
11	Wind Vely. in Miles p. day to 8 A.M.	102	98	85	106	127	122	128
12	Mean Wind Direction	W b N	W b N	W N W	W S W	W b S	W	W S W
13	Rainfall in inches to 8 A.M.	0	0	0·21	0·05	0	0·02	0
14	Total Rainfall from 1st January	3·16	3·16	3·37	3·42	3·42	3·44	3·44
15	Per cent of Cloudy Sky	83	80	87	83	100	93	87
16	Character of Weather	Fine passing clouds	Thunder storm	Cloudy	Cloudy	Gloomy	Cloudy	Cloudy

872

MYSORE GOVERNMENT METEOROLOGICAL DEPARTMENT.

Daily Means of Observations for the Week Sunday 10th to Saturday 16th June 1906.

No.	CHITALDRUG	Sunday 10	Monday 11	Tuesday 12	Wednesday 13	Thursday 14	Friday 15	Saturday 16
1	Barometer red. to 32° F.	27·458	27·431	27·378	27·387	27·422	27·435	27·369
2	Daily Barometric range	·119	·169	·141	·093	·100	·082	·091
3	Mean Dry Temperature in shade	81·8	79·7	78·3	73·6	71·8	71·7	74·2
4	Maximum do	92·1	89·3	88·1	88·0	76·2	80·1	83·1
5	Minimum do	72·1	72·3	70·1	67·9	67·4	66·9	66·8
6	Daily range of do	20·0	17·0	18·0	20·1	8·8	13·2	16·3
7	Mean Wet Temperature in shade	68·8	70·5	70·5	68·0	67·2	66·9	67·8
8	Minimum do	66·2	68·2	67·9	63·7	65·9	64·6	64·2
9	Pressure of Aqueous Vapour	·563	·648	·660	·669	·615	·614	·611
10	Humidity	52	61	67	79	77	77	70
11	Wind Vely. in Miles p. day to 8 A. M.	220	191	206	237	243	240	248
12	Mean Wind Direction	W b S	W N W	W b S	N W b W	W	W b S	W
13	Rainfall in inches to 8 A. M.	0	0	0·16	0·02	1·72	0·02	0·37
14	Total Rainfall from 1st January	4·75	4·75	4·91	4·93	6·65	6·67	7·04
15	Per cent of Cloudy Sky	67	90	77	80	100	93	83
16	Character of Weather	Fine passing clouds	Distant thunder and lightning	Fine	Dust storm	Gloomy	Cloudy	Cloudy

Dated 21st June 1906.

J. COOK, *Director of Meteorology.*

Abstract Statement of Plague Cases and Deaths in the Mysore Province for the week ending Friday the 22nd June 1906.

Place	During the week ending 22nd June 1906		During the week ending 15th June 1906		Figures for the corresponding week of last year		Number of infected villages
	Attacks	Deaths	Attacks	Deaths	Attacks	Deaths	
Bangalore City	...	...	...	...	...	...	..
Mysore City	*1	...	...	...	...	...	...
Bangalore District	..	..	...	...	2	2	...
Mysore District	...	...	...	...	7	3	...
Kolar District (excluding Gold Fields)	...	...	...	...	...	...	...
Kolar Gold Fields	...	...	...	...	...	...	..
Tumkur District	...	...	...	...	1	1	...
Hassan District	3	1	2	3	...	...	1
Chitaldrug District	...	...	...	...	...	...	...
Kadur District	1	...	...	...	...	...	1
Shimoga District	...	...	1	...	9	5	1
Total ...	5	1	3	3	19	11	3

*Imported.

J. SMYTH, M.D., *Lt.-Col.*, I. M. S.,
Offg. Sr. Surgeon & Sany. Comr., M. G.

875

The Mysore Gazette.

Vol. 41.] PUBLISHED BY AUTHORITY. [No. 26.

BANGALORE, THURSDAY, JUNE 28, 1906.

PART III.

Legislative Measures and Rules thereunder.

Notification No. J. 3491—*Pol.* 108-05-21, *dated* 13*th June* 1906.

With reference to item (10) of Rule 1 of the Arms Rules of the 26th December 1905, the Government of His Highness the Maharaja are pleased to direct that each village patel be allowed to hold free of license only a single fire arm in virtue of his office, and that if he requires more he should apply for a license for such additional arms like any other person and abide by the orders of the District Magistrate in the matter.

By Order,
K. S. CHANDRASEKHARA AIYAR,
Dy. Secy. to Govt., Gen. & Rev. Dept.

876

The Mysore Gazette.

VOL. 41.] PUBLISHED BY AUTHORITY. [No. 26.

BANGALORE, THURSDAY, JUNE 28, 1906.

PART IV.

OFFICIAL PAPERS.

Season Report for the Week ending with the 25th Saturday in 1906 (23*rd June* 1906)

District and Station.	Rainfall up to 8 A.M. on Saturday.					Price of food grains in seers per rupee and market fluctuations in prices of food grains.		
	This week.	Last ten years' average for the corresponding week.	Up to the end of the week from 1st January 1906.					
			This year.	Average of past ten years.	Excess (+) or defect (—) of column 4 compared with column 5.			
1	2	3	4	5	6	7		
	I. c.	I. c.	I. c.	I. c.	I. c.		This week.	Past week.	Past ten years' fortnightly average.
							Seers	Seers.	Seers.
BANGALORE.									
Bangalore C. & M. Station ...	... 8	... ...	... 8	.. ...	.. ..				
" City & Taluk ...	... 4	.. 56	7 94	8 76	— 0 82	Rice, 2nd sort.	6·50	6·50	9·28
Hoskote ...	... 60	... 40	4 40	8 39	— 3 99				
Dodballapur ...	... 6	.. 49	5 30	8 92	— 3 62	Ragi	14·50	15·00	21·83
Nelamangala ...	...	... 32	4 91	7 75	— 2 84	Kulthi	10·50	10·50	...
Kankanhalli ...	... 11	... 28	6 4	9 27	— 3 23	Kadale	8·00	8·00	10·65
Magadi ...	... 12	... 40	2 72	7 91	— 5 19				
Channapatna ...	... 10	.. 22	6 23	8 38	— 2 15				
Anekal ...	... 13	... 32	7 95	10 17	— 2 22				
Devanhalli ...	.. 9	... 28	4 17	8 16	— 3 99				
Closepet ...	... 40	... 32	6 28	8 99	— 2 71				
District average...	... 16	.. 36	6 99	10 67	— 3 68				
KOLAR.									
Kolar ...	... 10	.. 44	4 18	7 19	— 3 1				
Bowringpet ...	.. ...	... 42	3 54	7 28	— 3 74	Rice, 2nd sort.	7·50	7·50	9·40
Chintamani ...	... 31	... 41	4 39	6 23	— 1 84				
Mulbagal ...	... ..	... 66	5 95	6 46	— 0 51	Ragi	15·00	15·00	24·30
Sidlaghatta ...	.. 10	... 28	4 79	7 10	— 2 31	Kulthi	12·50	12·50	.
Chikballapur ...	.. 18	1 10	8 73	9 28	— 0 55	Kadale	9·00	9·00	9·30
Bagepalli ...	... ...	... 64	5 70	4 84	+ 0 86				
Goribidnur ...	... 7	... 50	5 94	5 84	+ 0 10				
Malur ...	.. 8	... 45	7 36	7 79	— 0 43				
Srinivaspur ...	.. 15	... 36	4 84	7 39	— 3 55				
Gudibanda ...	... 30	... 76	9 54	4 85	+ 4 69				
District average...	... 12	.. 55	5 90	6 75	— 0 85				
TUMKUR.									
Tumkur ...	... 67	... 41	5 43	9 45	— 4 2				
Maddagiri ...	... 12	... 24	3 12	5 98	— 2 86				
Chiknayakanhalli ..	... 14	... 61	4 86	9 34	— 4 48	Rice, 2nd sort.	7·50	7·00	9·40
Sira ...	... ...	.. 22	5 52	7 15	— 1 63				
Gubbi ...	... 20	... 27	3 59	6 97	— 3 38	Ragi	15·00	13·00	25·80
Tiptur ...	... 10	... 21	1 44	8 84	— 7 40	Kulthi	10·00	11·50	...
Pavagada ...	.. ...	... 31	4 11	5 6	— 0 95	Kadale	7·00	7·00	9·58
Kunigal ...	... .	.. 39	5 50	7 11	— 1 61				
Koratagere ...	... 4	.. 24	6 10	5 94	+ 0 16				
Turuvekere ...	... ...	... 39	4 12	7 30	— 3 18				
District average...	.. 13	... 33	4 38	7 31	— 2 93				

District and Station.	Rainfall up to 8 A. M. on Saturday.						Price of food grains in seers per rupee and market fluctuations in prices of food grains.							
	This week.		Last ten years' average for the corresponding week.		Up to the end of the week from 1st January 1906									
					This year.		Average of past ten years		Excess (+) or defect (—) of column 4 compared with column 5.					
1	2		3		4		5		6		7			
	I.	c.	I.	c.	I.	c.	I.	c.	I.	c.		This week Seers.	Past week. Seers.	Past ten years' fortnightly average. Seers.
MYSORE.														
Mysore ...	...	46	...	65	7	22	9	8	—1	86				
Chamrajnagar ...	...	57	...	29	3	54	11	67	—8	13				
Seringapatam ...	...	23	...	34	5	17	7	64	—2	47	Rice, 2nd sort.	7·25	7·50	9·88
Hunsur ...	1	12	...	57	7	31	10	81	—3	50	Ragi	12·00	12·00	21·29
Yedatore ...	...	29	...	64	4	84	8	94	—4	10	Kulthi	11·00	11·00	...
Heggaddevankote ...	...	88	2	16	4	71	15	68	—10	97	Kadale	9·00	9·00	10·43
Gundlupet ...	...	48	...	47	6	57	9	16	—2	59				
Nanjangud ...	...	68	...	72	4	12	9	20	—5	8				
T.-Narsipur ...	...	27	...	44	4	70	10	29	—5	59				
Malvalli ...	...	..	...	23	3	67	7	58	—3	91				
Mandya ...	...	8	..	34	4	98	8	25	—3	27				
Krishnarajpete ...	...	30	...	42	5	95	9	39	—3	44				
Nagamangala ...	..	...	...	24	6	1	7	16	—1	15				
District average...	...	41	...	57	5	29	9	60	—4	31				
HASSAN.														
Hassan ...	...	80	..	97	4	19	10	46	—6	47				
Manjarabad (Saklespur)	7	45	5	84	15	51	19	68	—4	17				
Arkalgud ..	1	70	1	37	9	41	10	4	—0	63				
Belur ...	1	90	1	60	8	70	11	65	—2	95	Rice, 2nd sort.	8·00	8·00	10·41
Channarayapatna ...	...	18	...	51	5	97	8	60	—2	63	Ragi	14·00	16·00	24·86
Arsikere ...	...	...	...	28	3	48	8	6	—4	58	Kulthi	10·00	10·50	...
Hole-Narsipur ...	...	30	..	77	8	41	8	45	—0	4	Kadale	7·50	8·50	9·80
Alur ...	3	12	1	78	6	4	11	40	—5	36				
District average...	1	93	1	64	7	71	11	3	—3	32				
SHIMOGA.														
Shimoga ...	1	77	1	15	7	60	9	57	—1	97				
Channagiri ...	1	14	...	70	3	60	7	47	—3	87	Rice, 2nd sort	7·75	7·75	12·03
Honnali ...	...	95	..	73	5	72	8	64	—2	92	Ragi	14·00	13·37	28·48
Shikarpur ...	3	39	1	65	5	69	9	4	—2	35	Kulthi	10·50	10·25	...
Sorab ...	6	10	3	47	9	70	11	73	—2	2				
Sagar ...	8	32	5	82	15	15	15	71	—0	56				
Nagar (Kallurkatte) ..	17	59	9	15	20	63	20	32	+0	31				
Tirthahalli ...	11	49	9	25	17	96	21	60	—3	64				
Kumsi ...	4	84	2	14	7	79	10	84	—3	5				
District average...	6	17	3	78	10	42	12	76	—2	34				
KADUR.														
Chikmagalur ...	1	98	1	72	9	59	12	62	—3	3				
Kadur ..	...	36	...	58	3	23	7	64	—4	41	Rice, 2nd sort	7·50	7·50	10·17
Tarikere ...	1	54	1	43	5	69	10	78	—5	9	Ragi	14·00	14·00	23·90
Koppa .	8	1	10	28	15	42	25	98	—10	56	Kulthi	8·00	9·00	...
Mudgere ...	9	19	8	51	15	16	25	75	—10	59	Kadale	7·50	8·00	10·05
Yedahalli ...	4	80	4	40	9	73	15	26	—5	53				
Sringeri ..	12	93	13	73	21	91	33	48	—11	57				
District average ..	5	54	5	80	11	53	18	78	—7	25				
CHITALDRUG.														
Chitaldrug .	..	53	..	79	7	53	6	77	+0	76				
Challakere ...	...	4	...	28	2	4	5	38	—3	34	Rice, 2nd sort	7·50	7·50	10·50
Hiriyur ..	..	...	...	7	6	29	5	28	+1	1	Ragi	13·00	14·00	27·10
Holalkere ...	..	45	...	39	3	21	6	90	—3	69	Kulthi	10·00	10·00	...
Davangere ...	...	44	...	70	5	56	7	71	—2	15	Kadale	8·00	8·00	10·50
Molakalmuru ...	..	12	...	58	4	96	7	2	—2	6	Cholum	12·00	12·00	23·90
Jagalur ...	..	26	.	88	4	23	7	88	—3	65				
Hosdurga ..	...	23	...	26	3	85	5	79	—1	94				
Harihar ...	1	9	...	34	8	16	6	52	+1	64				
District average...	..	35	...	47	5	14	6	58	—1	44				
Provincial average...	1	85	1	69	7	17	10	43	—3	26				

Note—Rice (husked)—Oryza Sativa.
Ragi—Eleusine Corocana.
Kulthi—(Horse gram) Dolichos Biflorus.
Cholum—Sorghum Vulgare.
Kadale—(Bengal gram) Ciser Arietinum.

DISTRICT REPORTS.

8. Markets how supplied.

9. Progress of agricultural operations, state of standing crops, prospects and probable outturn of harvests, serious damage done to crops by insects or other natural calamities.

10. Prospects of season, tracts in which the rainfall has been insufficient, areas affected by scarcity, number of people under relief, and state of food stocks.

11. Public health.

12. Remarks as to the condition of agricultural stock, failure of pasturage of fodder, etc.

BANGALORE CIVIL AND MILITARY STATION.

		Normal.	*Current.*	
Prices of food grains—	Rice ...	10 to 11	6½ to 7	seers per rupee.
	Ragi	25 to 30	15 to 16	

Agricultural operation—Ploughing.

Cattle are in good condition. Water and fodder sufficient.

BANGALORE CITY AND TALUKS.

8. Market well supplied. Prices high.

9. Standing crops are in good condition, except in Closepet where sugar-cane is reported to be fading. Ploughing is still carried on throughout the district. 200 acres of paddy and 170 acres of ragi in the Bangalore Taluk, 15 acres of ragi and 8 acres of gingelly in Hoskote, paddy and haraka in some parts of Channapatna, and punaji paddy in Anekal were sown during the week. There was no harvest anywhere.

10. Prospects of the season not bad. Rainfall has been insufficient in Magadi and Closepet. Food stocks available.

11. Public health generally good. Small-pox prevails in some parts of Devanhalli.

12. Cattle generally healthy. In Closepet they are not in a satisfactory condition. Water is sufficiently available. Pasture is just beginning to be available except in Closepet, where difficulty for fodder still continues.

KOLAR.

8. Market fairly supplied. Prices high.

9. Samé and haraka are being sown in Kolar, Bowringpet and Mulbagal. Paddy is being harvested in parts of Sidlaghatta and Goribidnur.

10. Prospects of the season uncertain. Food stocks are available in moderate quantities. Rains have withhled.

11. Public health generally good.

12. Cattle now find some water and pasture. Their condition is yet far from satisfactory.

TUMKUR.

8. Market well supplied.

9. Sugar-cane in Tumkur and Gubbi and paddy in Maddagiri and Koratagere are being harvested. Navane, cholum and nat-ragi in Maddagiri, castor in Chiknayakanhalli, haraka, castor and togari in Sira, cholum, ground-nut, punaji paddy, haraka, castor, til and green gram in Gubbi; haraka, paddy, castor and cholum in Tiptur; sajji, togari, ballar and cholum in Pavagada; cholum, haraka, castor and punaji paddy in Koratagere; and paddy in Turuvekere are being sown. Standing crops, *viz.*, sugar-cane, nat-ragi, paddy, black and green grams, cholum, til, haraka and castor are in fair condition.

10. Prospects of the season are hopeful. Food stocks are available for the present. The recent rains have provided some water for men and cattle all over the district.

11. Public health generally good, except that fever and small-pox prevail in parts of Tiptur.

12. The condition of cattle is improving except in parts of Gubbi and Tiptur, where old ones are loosing condition entirely for want of sufficient fodder. In Chiknayakanhalli, Sira, Tiptur and Kunigal date leaves are used as fodder for cattle.

MYSORE.

8. Market well supplied.

9. Standing crops are reported to be fair in parts of Chamrajnagar, Seringapatam, Hunsur, Yedatore, Haggaddevankote, Gundlupet, Nanjangud; T.-Narsipur, Malvalli and Krishnarajpete, while they are withering in parts of Chamrajnagar, T.-Narsipur, Mandya and Nagamangala. Togari and ballar in parts of Heggaddevankote and paddy in lands under channels in Krishnarajpete are being sown. The gingelly crop in parts of Nanjangud are reported to have been attacked with "*mari*" insect.

10. Prospects of the season have slightly improved. The recent rains have done good to the standing crops to some extent in a few taluks and more rain is urgently wanted. Food stock sufficient for the present.

11. Public health good throughout.

12. Cattle healthy. Water and fodder generally available. Fodder is reported to be scanty in parts of Gundlupet and Heggaddevankote.

HASSAN.

8. Market fairly well supplied Prices high.

9. Standing crops, *viz.*, sugar-cane in Hassan, Belur, Hole-Narsipur and Alur and paddy in Arkalgud, Manjarabad and Alur are reported to be in good condition. Other crops, *viz.*, gid ragi, cholum and castor in Hassan; gingelly, togari, cholum, tadagani and castor in Arkalgud; and togari and gingelly in Alur are in fair condition. Agricultural operations are somewhat retarded in Arsikere and Channarayapatna. The outturn of standing crops in Hole-Narsipur is estimated at 4 to 8 annas, and of black and green grams and tadagani under harvest, at 6 to 8 annas.

10. Prospects of the season hopeful. More rain is wanted in all parts. Food stocks are sufficient for the present.

11. Public health generally good. Small-pox is reported to be subsiding in parts of Hassan, Manjarabad, Arsikere and Channarayapatna.

12. Cattle generally healthy. Foot and mouth disease is subsiding in parts of Manjarabad and Hole-Narsipur. Water and fodder are generally available except in parts of Arsikere.

SHIMOGA.

8. Market well supplied. Prices high.

9. Ploughing and sowing operations are in progress in all the taluks. Ragi and cholum, in Channagiri; green gram, sessamum, cholum, ragi, baragu, togari, ballar and paddy in Honnali; and paddy in Shimoga, Sorab, Nagar, Tirthahalli and Sagar are being sown. Sugar-cane is in a fair condition in Shimoga, Sagar, Nagar, Sorab and under the Sulekere tank in Channagiri. The estimated outturn of paddy sown in Sagar and Tirthahalli is 8 and 12 annas respectively.

10. More rain is wanted in all the taluks. Food stocks are insufficient in Shikarpur, Sorab and Kumsi Rice continues to be imported from the Madras Presidency into the several parts of the district.

11. Public health is generally good. Cholera prevails in parts of all taluks except Channagiri and Tirthahalli and small-pox in parts of Sagar, Sorab and Channagiri.

12. Supply of fodder is limited in Honnali, Shikarpur and Sorab. Pasture is springing up in all taluks. Scarcity of water still exists to some extent in the maidan parts of the district.

KADUR.

8. Market fairly well supplied.

9. Ploughing operations are in progress in parts of the district. Ragi, paddy, cholum and gingelly in parts of Tarikere, and ragi, cholum, gingelly, coriander, black and green grams in parts of Kadur are being sown. The standing sugar-cane crops in Chikmagalur, Kadur, Yedahalli, Koppa and Tarikere are in fairly good condition. Sugar-cane in Kadur and kar-paddy in Koppa are being harvested. In several parts of Kadur there was not enough of rain-fall to commence sowing.

10. Prospects of the season fair, but more rain is needed. Food stocks are available and sufficient for the present.

11. Public health generally good, except that small-pox prevails in parts of Chikmagalur, Mudgere, Yedahalli and Tarikere.

12. Cattle generally healthy but poor in condition in parts of Tarikere and Kadur. Water and fodder generally available. Green grass is springing up in parts where there were good showers.

CHITALDRUG.

8. Market well supplied.

9. There were light showers of rain during the week, and ploughing and sowing are being pushed on in all the taluks.

10. Prospects of the season fair. Food stocks available.

11. Public health good.

12. Cattle healthy. Water available. Difficulty for fodder continues in some parts.

BANGALORE,
27th June 1906.

P. G. D'SOUZA,
for *Secy. to the Govt. of H. H. the Maharaja of Mysore, Gen. & Rev. Dept.*

THE
MYSORE GAZETTE.

CALENDAR FOR JULY 1906.

THURSDAY,
28th June 1906.

Kanarese year—
Parabhava.

ಚಾಂದ್ರಮಾನ ವರುಷ—
ಪರಾಭವ.

1906ನೆ ಇಸವಿ ಜುಲೆ ಮಾಹೆ ಪಂಚಾಂಗ.

Date of the Month. ತಾರೀಖು.	Days of the Week. ವಾರಗಳ ಹೆಸರು.		Kanarese. ಚಾಂದ್ರಮಾನ.			Tamil. ಸೌರಮಾನ.		Stars. ನಕ್ಷತ್ರ.		The Sun. ಸೂರ್ಯ.		The Moon. ಚಂದ್ರ.	
	English. ಇಂಗ್ಲಿಷ್.	Kanarese. ಕನ್ನಡ.	Month. ಮಾಸ.	Date. ತಿಥಿ.	Time. ಕಾಲ.	Month. ಮಾಸ.	Date. ತೇದಿ.	Name. ಹೆಸರು.	Time. ಕಾಲ.	Rises. ಉದಯ.	Sets. ಅಸ್ತ.	Rises. ಉದಯ.	Sets. ಅಸ್ತ.
1	2	3	4	5	6	7	8	9	10	11	12	13	14
					ಘಳಿಗೆ. ವಿಘಳಿಗೆ.				ಘಳಿಗೆ.ವಿಘಳಿಗೆ	ಘಂ. ನಿಮಿಷ.	ಘಂ. ನಿಮಿಷ.	ಘಂ. ನಿಮಿಷ. ಹಗಲು.	ಘಂ. ನಿಮಿಷ. ಪ್ರಾತಃ
1	Sunday ...	ಭಾನುವಾರ ...	Ashadha Suddha. ಆಷಾಢ ಶುದ್ಧ.	10	40—38	Ani. ಆಣಿ.	18	ಸ್ವಾತಿ	56 - 21	5 - 39	6—28	1 - 40	1— 0
2	Monday ..	ಸೋಮವಾರ ..		11	34—27		19	ವಿಶಾಖ	52 14	5 - 39	6—28	2 - 39	1—48
3	Tuesday ...	ಮಂಗಳವಾರ ..		12	28—11		20	ಅನೂರಾಧ	47 - 51	5 39	6 - 28	3—41	2 - 37
4	Wednesday ...	ಬುಧವಾರ ...		13	22— 0		21	ಜೇಷ್ಠ	43 48	5 39	6 - 29	4—45	3 —31
5	Thursday ..	ಗುರುವಾರ		14	16— 2		22	ಮೂಲ	39 - 57	5 - 39	6—29	5 - 47	4 - 30
6	Friday ○ ...	ಶುಕ್ರವಾರ ○ ..		15	10—29		23	ಪೂರ್ವಾಷಾಢ	36 34	5 40	6—29	6 - 48	5 - 31
7	Saturday ..	ಶನಿವಾರ ..	Ashadha Bahula. ಆಷಾಢ ಬಹುಳ.	1	5—32		24	ಉತ್ತರಾಷಾಢ	33 - 59	5 40	6 - 29	7 - 46	6—32
8	Sunday .	ಭಾನುವಾರ .		2	1—21		25	ಶ್ರವಣ	32 - 12	5 - 40	6—29	8 - 38	7 - 33
9	Monday ...	ಸೋಮವಾರ ...		4	55—22		26	ಧನಿಷ್ಠ	31 - 25	5 40	6—29	9 - 26	8—32
10	Tuesday ...	ಮಂಗಳವಾರ ..		5	54—23		27	ಶತಭಿಷ	31—47	5 - 41	6 29	10 - 10	9—27
11	Wednesday ...	ಬುಧವಾರ ...		6	54—38		28	ಪೂರ್ವಾಭಾದ್ರ	33—22	5 - 41	6 - 29	10 - 52	10—20
12.	Thursday ...	ಗುರುವಾರ ...		7	56—16		29	ಉತ್ತರಾಭಾದ್ರ	36 - 14	5 - 41	6—29	11 - 33	11 - 10
13	Friday ...	ಶುಕ್ರವಾರ ..		8	59— 2		30	ರೇವತಿ	40 - 16	5—41	6 - 29	ಪ್ರಾತಃ	11 - 56
14	Saturday .	ಶನಿವಾರ		9	60— 0		31	ಅಶ್ವಿನಿ	45 - 22	5 42	6 - 29	0 - 11	12—43
15	Sunday ..	ಭಾನುವಾರ .		9	3—18		32	ಭರಣಿ	51 - 20	5 - 42	6 - 29	0—50	1 30
16	Monday ...	ಸೋಮವಾರ ...		10	7—51		1	ಕೃತ್ತಿಕ	57—51	5 - 42	6 - 29	1 - 30	2—17
17	Tuesday ..	ಮಂಗಳವಾರ ...		11	12—50		2	ರೋಹಿಣಿ	60— 0	5 - 42	6—28	2 - 12	3— 5
18	Wednesday ...	ಬುಧವಾರ ...		12	17—49		3	ರೋಹಿಣಿ	4 —30	5—43	6—28	5—52	3—54
19	Thursday ..	ಗುರುವಾರ ...		13	22—24		4	ಮೃಗಶಿರ	15—17	5 - 43	6—28	3 - 43	4 - 43
20	Friday ..	ಶುಕ್ರವಾರ		14	26—12		5	ಆರಿದ್ರಾ	16—14	5 - 43	6 - 28	4—32	5 - 32
21	Saturday	ಶನಿವಾರ ..		30	28—58		6	ಪುನರ್ವಸು	20—48	5—43	6—28	5 - 23	6 - 22

22	Sunday ...	ಭಾನುವಾರ ...	Sravana Suddha. ಶ್ರಾವಣ ಶುದ್ಧ.	1	30—33	Audi. ಆಡಿ.	7	ಪುಷ್ಯಮಿ	24—12	5—44	6—28	6—15	7—10
23	Monday ...	ಸೋಮವಾರ		2	30—50		8	ಆಶ್ಲೇಷ	26—22	5—44	6—28	7— 7	7—58
24	Tuesday ..	ಮಂಗಳವಾರ ..		3	29—49		9	ಮಖ	27—17	5—44	6—27	8— 0	8—44
25	Wednesday ...	ಬುಧವಾರ .		4	27—37		10	ಪುಬ್ಬ	26—58	5—44	6—27	8—53	9—29
26	Thursday ...	ಗುರುವಾರ ..		5	24—18		11	ಉತ್ತರೆ	25—35	5—45	6—27	9—47	10—13
27	Friday	ಶುಕ್ರವಾರ ...		6	20— 3		12	ಹಸ್ತ	23—15	5—45	6—27	10—40	10—55
28	Saturday .	ಶನಿವಾರ ...		7	15— 3		13	ಚಿತ್ತ	20—11	5—45	6—26	11—34	11—44
29	Sunday ...	ಭಾನುವಾರ ...		8	9—21		14	ಸ್ವಾತಿ	16—33	5—46	6—26	12—30	ಪ್ರಾತಃ
30	Monday ...	ಸೋಮವಾರ ...		9	3—32		15	ವಿಶಾಖ	12—33	5—46	6—26	1—29	0—32
31	Tuesday ...	ಮಂಗಳವಾರ ..		11	51— 9		16	ಅನೂರಾಧ	8—20	5—47	6—26	2—30	1—23

Full Moon. ○
ಹುಣ್ಣಿಮಿ.

New Moon. ●
ಅಮಾವಾಸ್ಯ.

ರಾಹುಕಾಲ.

ಭಾನುವಾರ	ಸಾಯಂಕಾಲ	$4\frac{1}{2}$	ಘಂಟೆ ಯಿಂದ	6	ಘಂಟೆ ವರಿಗೆ.
ಸೋಮವಾರ	ಬೆಳಿಗ್ಯೆ	$7\frac{1}{2}$		9	,,
ಮಂಗಳವಾರ	ಸಾಯಂಕಾಲ	3		$4\frac{1}{2}$	,,
ಬುಧವಾರ	ಬೆಳಿಗ್ಯೆ	12		$1\frac{1}{2}$	,,
ಗುರುವಾರ	ಸಾಯಂಕಾಲ	$1\frac{1}{2}$		3	,,
ಶುಕ್ರವಾರ	ಬೆಳಿಗ್ಯೆ	$10\frac{1}{2}$		12	,,
ಶನಿವಾರ	,,	9		$10\frac{1}{2}$	,,

ಗುಳಿಕಕಾಲ.

ಭಾನುವಾರ	ಸಾಯಂಕಾಲ	3	ಘಂಟೆ ಯಿಂದ	$4\frac{1}{2}$	ಘಂಟೆ ವರಿಗೆ.
ಸೋಮವಾರ	,,	$1\frac{1}{2}$	,,	3	,,
ಮಂಗಳವಾರ	,,	12	,,	$1\frac{1}{2}$	,,
ಬುಧವಾರ	ಬೆಳಿಗ್ಯೆ	$10\frac{1}{2}$	,,	12	,,
ಗುರುವಾರ	,,	9	,,	$10\frac{1}{2}$	,,
ಶುಕ್ರವಾರ	,,	$7\frac{1}{2}$	,,	9	,,
ಶನಿವಾರ	,,	6	,,	$7\frac{1}{2}$	,,

GOVERNMENT HOLIDAYS.—ಸರ್ಕಾರದ ರಜಾ ದಿವಸಗಳು.

MYSORE GAZETTE OFFICE,
BANGALORE.

C. H. YATES,
Compiler, Mysore Gazette.

Govt. Press, Bangalore—1906.

THE
MYSORE GAZETTE.

CALENDAR FOR JULY 1906.

THURSDAY,
28th June 1906.

Kanarese year—
Parabhava.

ಚಾಂದ್ರಮಾನ ವರುಷ—
ಪರಾಭವ.

1906ನೆ ಇಸವಿ ಜುಲೆ ಮಾಹೆ ಪಂಚಾಂಗ.

Date of the Month. ತಾರೀಖು.	Days of the Week. ವಾರಗಳ ಹೆಸರು.		Kanarese. ಚಾಂದ್ರಮಾನ.			Tamil. ಸೌರಮಾನ.		Stars. ನಕ್ಷತ್ರ.		The Sun. ಸೂರ್ಯ.		The Moon. ಚಂದ್ರ.	
	English. ಇಂಗ್ಲಿಷ.	Kanarese. ಕನ್ನಡ.	Month. ಮಾಸ.	Date. ತಿಥಿ.	Time. ಕಾಲ.	Month. ಮಾಸ.	Date. ತೇದಿ.	Name. ಹೆಸರು.	Time. ಕಾಲ.	Rises. ಉದಯ.	Sets. ಅಸ್ತ.	Rises. ಉದಯ.	Sets. ಅಸ್ತ.
1	2	3	4	5	6	7	8	9	10	11	12	13	14
			Ashadha Suddha. ಆಷಾಢ ಶುದ್ಧ.		ಘಳಿಗೆ. ವಿಘಳಿಗೆ.				ಘಳಿಗೆ. ವಿಘಳಿಗೆ	ಘಂ. ನಿಮಿಷ.	ಘಂ. ನಿಮಿಷ.	ಘಂ. ನಿಮಿಷ. ಹಗಲು.	ಘಂ. ನಿಮಿಷ. ಪ್ರಾತಃ
1	Sunday ...	ಭಾನುವಾರ ...		10	40—38	Ani. ಆಣಿ.	18	ಸ್ವಾತಿ	56 21	5 - 39	6—28	1 - 40	1— 0
2	Monday ..	ಸೋಮವಾರ ..		11	34—27		19	ವಿಶಾಖ	52 14	5 - 39	6—28	2 - 39	1—48
3	Tuesday ...	ಮಂಗಳವಾರ .		12	28—11		20	ಅನೂರಾಧ	47 — 51	5 39	6 - 28	3—41	2 — 37
4	Wednesday ...	ಬುಧವಾರ ...		13	22— 0		21	ಜೇಷ್ಠ	43 48	5 39	6 - 29	4—45	3 — 31
5	Thursday ..	ಗುರುವಾರ		14	16— 2		22	ಮೂಲ	39 — 57	5 — 39	6—29	5 — 47	4 — 30
6	Friday ○ ...	ಶುಕ್ರವಾರ ○ ..		15	10 — 29		23	ಪೂರ್ವಾಷಾಢ	36 34	5 40	6—29	6 - 48	5 — 31
			Ashadha Bahula. ಆಷಾಢ ಬಹುಳ.										
7	Saturday ..	ಶನಿವಾರ ..		1	5—32		24	ಉತ್ತರಾಷಾಢ	33 - 59	5 40	6 - 29	7 - 46	6—32
8	Sunday .	ಭಾನುವಾರ .		2	1—21		25	ಶ್ರವಣ	32 — 12	5 - 40	6—29	8 - 38	7 — 33
9	Monday ...	ಸೋಮವಾರ ...		4	55—22		26	ಧನಿಷ್ಠ	31 - 25	5 40	6—29	9 — 26	8—32
10	Tuesday ...	ಮಂಗಳವಾರ ...		5	54 — 23		27	ಶತಭಿಷ	31 — 47	5 - 41	6 29	10 - 10	9—27
11	Wednesday ...	ಬುಧವಾರ		6	54 — 38		28	ಪೂರ್ವಾಭಾದ್ರ	33 — 22	5 41	6 - 29	10 - 52	10—20
12	Thursday ...	ಗುರುವಾರ ...		7	56 — 16		29	ಉತ್ತರಾಭಾದ್ರ	36 - 14	5 - 41	6—29	11 — 33	11 — 10
13	Friday ...	ಶುಕ್ರವಾರ ..		8	59— 2		30	ರೇವತಿ	40 — 16	5—41	6 - 29	ಪ್ರಾತಃ	11 — 56
14	Saturday .	ಶನಿವಾರ .		9	60 — 0		31	ಅಶ್ವಿನಿ	45 - 22	5 42	6— 29	0 — 11	12—43
15	Sunday ..	ಭಾನುವಾರ .		9	3 — 18		32	ಭರಣಿ	51 - 20	5 - 42	6 - 29	0 — 50	1 30
16	Monday ...	ಸೋಮವಾರ ...		10	7 — 51		1	ಕೃತ್ತಿಕ	57—51	5 - 42	6 - 29	1 - 30	2—17
17	Tuesday ..	ಮಂಗಳವಾರ ...		11	12 — 50		2	ರೋಹಿಣಿ	60— 0	5 — 42	6—28	2 - 12	3— 5
18	Wednesday ..	ಬುಧವಾರ ...		12	17 — 49		3	ರೋಹಿಣಿ	4 — 30	5—43	6 — 28	5 — 52	3 — 54
19	Thursday ..	ಗುರುವಾರ ...		13	22 — 24		4	ಮೃಗಶಿರ	15—17	5 — 43	6—28	3 - 43	4 — 43
20	Friday ..	ಶುಕ್ರವಾರ		14	26 — 12		5	ಆರಿದ್ರಾ	16—14	5 - 43	6 - 28	4—32	5 — 32
21	Saturday ●	ಶನಿವಾರ ● ..		30	28 — 58		6	ಪುನರ್ವಸು	20—48	5—43	6—28	5 — 23	6 — 22